DONALD W. REYNOLDS CENTER FOR HEALTH SCIENCES

ARKANSAS STATE UNIVERSITY

JONESBORO, ARKANSAS

PROJECT ARCHITECT

BRACKETT KRENNERICH architects
100 East Huntington Ave - Suite D
Jonesboro, Arkansas 72401
(870) 932-0571, Fax (870) 932-0975

STRUCTURAL ENGINEER

Engineering Consultants, Inc.
401 West Capitol Ave - Suite 305
Little Rock, Arkansas 72201
(501) 376-3752, Fax (501) 376-3714

MECHANICAL/PLUMBING/ELECTRICAL

Pettit & Pettit Consulting Engineers, Inc.
Heritage West Building, Suite 400
201 E. Markham Street
Little Rock, Arkansas 72205-1757
(501) 374-3731, Fax (501) 374-1802

CIVIL ENGINEER

Haywood, Kenward, Bare AND ASSOCIATES, INC.
Civil Engineering - Surveying - Planning
1801 Latourette Dr.
Jonesboro, Arkansas 72404
(870) 932-2019, Fax (870) 932-1076

SYMBOLS

SECTION — A / A500 — SECTION NUMBER / SHEET NUMBER

DETAIL — 1 / A001 — DETAIL NUMBER / SHEET NUMBER

DOOR — 1

ALUMINUM FRAME — AF-1

HOLLOW METAL FRAME — HM-1

EXISTING CONTOUR LINE

NEW CONTOUR LINE

NEW SPOT ELEVATION — + 259.67

FINISH ELEVATION — ELEV. = 100.00

ABBREVIATIONS

ABOVE FINISH FLOOR	A.F.F.	MECHANICAL	MECH.
ACOUSTICAL	ACOUST.	METAL THRESHOLD	M.T.
ALUMINUM	ALUM.	NOMINAL	NOM.
APPROXIMATE	APPROX.	NOT IN CONTRACT	N.I.C.
BOTTOM OF FOOTING	B.O.F.	ON CENTER	O.C.
CEILING	CLG.	PLATE	PL
CENTER LINE	℄	REQUIRED	REQ.
EACH	EA.	SIMILAR	SIM.
ELECTRIC WATER COOLER	E.W.C.	SQUARE	SQ.
FINISH	FIN.	SUSPENDED	SUSP.
FIRE EXTINGUISHER	F.E.	TOP OF CURB	T.O.C.
FIRE EXTINGUISHER CABINET	F.E.C.	TOP OF FOOTING	T.O.F.
FLOOR	FLR.	TOP OF WALL/WALK	T.O.W.
GENERAL CONTRACTOR	G.C.	TYPICAL	TYP.
INSULATION	INSUL.	WITH	W/
JOINT	JNT.		

MATERIALS

CONCRETE
STEEL
METAL STUDS
CONCRETE BLOCK
PLYWOOD
FINISH WOOD
WOOD FRAMING OR BLOCKING
GYPSUM BOARD
RIGID INSULATION
BATT INSULATION
COMPACT FILL
GRAVEL FILL
ASPHALT PAVING

2002 ARKANSAS FIRE PREVENTION CODE DATA

OCCUPANCY CLASSIFICATION

FIRST FLOOR ..... BUSINESS, GROUP B
SECOND FLOOR ..... BUSINESS, GROUP B / ASSEMBLY, GROUP A3
THIRD FLOOR ..... BUSINESS, GROUP B / ASSEMBLY, GROUP A3

BUILDING AREA

FIRST FLOOR ..... 19,076 SQUARE FEET
SECOND FLOOR ..... 17,700 SQUARE FEET
SECOND FLOOR WALKWAY ..... 383 SQUARE FEET
THIRD FLOOR ..... 17,347 SQUARE FEET
TOTAL BUILDING AREA ..... 54,506 SQUARE FEET

BUILDING HEIGHT ..... 64'-0"

NUMBER OF STORIES ..... THREE (3)

TYPE OF CONSTRUCTION ..... TYPE II-B, FULLY SPRINKLED

ALLOWABLE HEIGHT(Table 503) ..... 75'-0"
ALLOWABLE HEIGHT IS INCREASED TO 75'-0" WITH HEIGHT MODIFICATIONS WITH INSTALLATION OF AUTOMATIC SPRINKLER SYSTEM. SECTION 504.2

MAXIMUM NO. OF STORIES .....
BUSINESS, GROUP B ..... FIVE (5)
MAXIMUM NUMBER OF STORIES INCREASED TO FIVE (5) WITH INSTALLATION OF AUTOMATIC SPRINKLER SYSTEM. SECTION 504.2
ASSEMBLY, GROUP A3 ..... THREE (3)
MAXIMUM NUMBER OF STORIES INCREASED TO THREE (3) WITH INSTALLATION OF AUTOMATIC SPRINKLER SYSTEM. SECTION 504.2

BUILDING SETBACKS

North ..... 57'-10" to adjacent building at closest point
East ..... 121'-8" to edge of street
South ..... 15'-7" to adjacent building at closest point
West ..... 31'-6" to edge of street

ALLOWABLE AREA(S)

OVERALL BUILDING AREA MEETS ALLOWABLE BUILDING AREA FOR BUSINESS AND ASSEMBLY OCCUPANCIES OF BUILDING.

FIRST FLOOR
ALLOWED AREA FROM TABLE 503
BUSINESS OCCUPANCY ..... 23,000 sq. ft.
AUTOMATIC SPRINKLER SYSTEM INCREASE
BUSINESS OCCUPANCY (23,000 x 200 percent) ..... 46,000 sq. ft.
ALLOWED FLOOR AREA ..... 69,000 sq. ft.

SECOND FLOOR
ALLOWED AREA FROM TABLE 503
BUSINESS OCCUPANCY ..... 23,000 sq. ft.
ASSEMBLY OCCUPANCY (A3) ..... 9,500 sq. ft.
AUTOMATIC SPRINKLER SYSTEM INCREASE
BUSINESS OCCUPANCY (23,000 x 200 percent) ..... 46,000 sq. ft.
ASSEMBLY OCCUPANCY (A3) (9,500 x 200 percent) ..... 19,000 sq. ft.
ALLOWED FLOOR AREA ..... 92,055 sq. ft.
BUSINESS OCCUPANCY ..... 69,000 sq. ft.
ASSEMBLY OCCUPANCY (A3) ..... 28,500 sq. ft.

THIRD FLOOR
ALLOWED AREA FROM TABLE 503
BUSINESS OCCUPANCY ..... 23,000 sq. ft.
ASSEMBLY OCCUPANCY (A3) ..... 9,500 sq. ft.
AUTOMATIC SPRINKLER SYSTEM INCREASE
BUSINESS OCCUPANCY (23,000 x 200 percent) ..... 46,000 sq. ft.
ASSEMBLY OCCUPANCY (A3) (9,500 x 200 percent) ..... 19,000 sq. ft.
ALLOWED FLOOR AREA ..... 92,055 sq. ft.
BUSINESS OCCUPANCY ..... 69,000 sq. ft.
ASSEMBLY OCCUPANCY (A3) ..... 28,500 sq. ft.

OCCUPANCY LOAD (Table 1003.2.2.2)

FIRST FLOOR
BUSINESS 153
STORAGE AND MECHANICAL 7
TOTAL OCCUPANCY 160

SECOND FLOOR
BUSINESS
GENERAL BUSINESS 44
CONFERENCE 203 36
LOCKER ROOM 212 10
ASSEMBLY
COMPUTER LAB 214 73
CLASSROOM 216 (FIXED SEATING AND TABLES) 52
CLASSROOM 222 (FIXED SEATING AND TABLES) 103
STUDENT LOUNGE 223 79
STORAGE AND MECHANICAL 3
TOTAL OCCUPANCY 400

THIRD FLOOR
BUSINESS
GENERAL BUSINESS 54
CLASSROOM 331 (FIXED SEATING AND TABLES) 46
ASSEMBLY
CLASSROOM 307 (FIXED SEATING AND TABLES) 50
AUTO TUTORIAL 324 144
STORAGE AND MECHANICAL 6
TOTAL OCCUPANCY 300

EXIT ACCESS STRATEGY
Automatic Sprinkler System Throughout.
Maximum Travel Distance to Fire Extinguisher ..... 75 feet
Maximum Floor Area For Extinguisher ..... 11,250 sq. ft.
88" Minimum Corridor Width (Main Corridors)

EXIT REQUIREMENTS

FIRST FLOOR
Min. Number of Exits ..... Two (2)
Three exits provided
Min. Door Size ..... 36" (ADA)
Max. Distance to Exit ..... 200'-0"
Egress Level ..... 15" Per Person

SECOND FLOOR
Min. Number of Exits ..... Two (2)
Four exits provided
Min. Door Size ..... 36" (ADA)
Max. Distance to Exit ..... 200'-0"
Egress Level ..... 15" Per Person

THIRD FLOOR
Min. Number of Exits ..... Two (2)
Three exits provided
Min. Door Size ..... 36" (ADA)
Max. Distance to Exit ..... 200'-0"
Egress Level ..... 15" Per Person

SITE CLASS ..... D
SEISMIC DESIGN CATEGORY ..... D
SEISMIC ZONE 3

I hereby certify that these plans and specifications have been prepared by me, or under my supervision. I further certify that to the best of my knowledge these plans and specifications are as required by law and in compliance with the Arkansas Fire Prevention Code for the State of Arkansas.

George J. Krennerich III

BRACKETT KRENNERICH & ASSOCIATES, P.A. — REGISTERED ARCHITECTS 213 — ARKANSAS — 30 JAN 08

VICINITY MAP

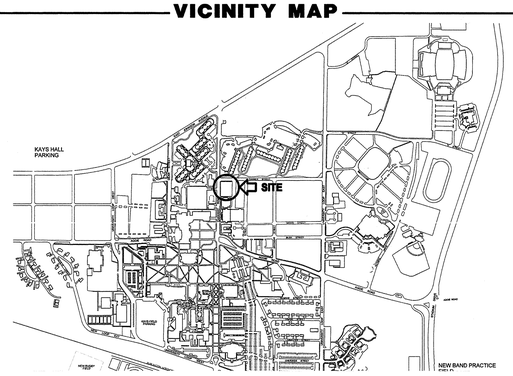

INDEX TO DRAWINGS

TITLE SHEET

CIVIL
C000 ..... TOPOGRAPHICAL SURVEY (REFERENCE ONLY)
C001 ..... SITE DEMOLITION PLAN, STORM WATER POLLUTION PREVENTION PLAN, DETAILS
C002 ..... SITE LAYOUT PLAN
C003 ..... SITE GRADING PLAN
C004 ..... UTILITY AND DRAINAGE PLAN
C005 ..... CIVIL DETAILS
C006 ..... CIVIL DETAILS
C007 ..... SITE DETAILS (ARCHITECTURAL)
C008 ..... COOLING TOWER PLAN, COOLING TOWER ELEVATIONS, COOLING TOWER DETAILS

ARCHITECTURAL
A001 ..... DOOR SCHEDULE, HOLLOW METAL FRAME SCHEDULE, VISUAL DOOR TYPES,DOOR DETAILS
A002 ..... DOOR DETAILS, GLASS WALL DETAILS
A003 ..... CURTAIN WALL SCHEDULE
A004 ..... CURTAIN WALL SCHEDULE, ALUMINUM FRAME SCHEDULE, GLASS WALL SCHEDULE
A005 ..... FRAME DETAILS
A005.1 ..... FRAME DETAILS
A006 ..... FINISH SCHEDULES, TRANSITION DETAILS
A007 ..... FINISH PLANS, DETAILS
A007.1 ..... INTERIOR ELEVATIONS
A008 ..... LIFE SAFETY PLANS
A009 ..... VISUAL WALL TYPES
A100 ..... FIRST FLOOR PLAN
A101 ..... SECOND FLOOR PLAN, PARTIAL DEMOLITION PLAN, DETAILS
A102 ..... THIRD FLOOR PLAN, DETAILS
A103 ..... ROOF PLANS, CLERESTORY PLAN
A104 ..... ROOF DETAILS
A105 ..... ROOF DETAILS
A200 ..... EXTERIOR ELEVATIONS
A201 ..... EXTERIOR ELEVATIONS
A202 ..... BUILDING SECTIONS, DETAILS
A203 ..... BUILDING SECTIONS
A300 ..... ENLARGED STAIR PLANS, ENLARGED ELEVATOR PIT PLAN, DETAILS
A301 ..... STAIR SECTIONS, SHIP'S LADDER SECTION
A302 ..... STAIR SECTIONS, ELEVATOR SHAFT SECTION
A303 ..... STAIR SECTION
A400 ..... 1ST FLOOR REFLECTED CEILING PLAN, CEILING DETAILS
A401 ..... 2ND FLOOR REFLECTED CEILING PLAN, CEILING DETAILS
A402 ..... 3RD FLOOR REFLECTED CEILING PLAN, CEILING DETAILS
A500 ..... WALL SECTIONS, DETAILS
A501 ..... WALL SECTIONS
A502 ..... WALL SECTIONS, DETAILS
A503 ..... WALL SECTIONS
A504 ..... WALL SECTIONS
A505 ..... WALL SECTIONS
A506 ..... WALL SECTIONS
A600 ..... ENLARGED TOILET PLANS, TOILET ELEVATIONS ADA MOUNTING HEIGHTS
A601 ..... MILLWORK ELEVATIONS
A602 ..... MILLWORK ELEVATIONS
A603 ..... SHELVING ELEVATIONS
A604 ..... CABINET SECTIONS

STRUCTURAL
S100 ..... GENERAL NOTES, LEGENDS, & SCHEDULES
S101 ..... FOUNDATION PLAN
S201 ..... FOUNDATION DETAILS
S202 ..... FOUNDATION DETAILS
S301 ..... SECOND FLOOR FRAMING PLAN
S302 ..... THIRD FLOOR FRAMING PLAN
S303 ..... ROOF FRAMING PLAN
S304 ..... HIGH ROOF FRAMING PLAN
S401 ..... FRAMING DETAILS
S402 ..... FRAMING DETAILS
S403 ..... FRAMING DETAILS
S404 ..... FRAMING DETAILS
S501 ..... BRACE ELEVATIONS
S502 ..... BRACE DETAILS

MECHANICAL
M101 ..... FIRST FLOOR PLAN - HVAC
M102 ..... SECOND FLOOR PLAN - HVAC
M103 ..... THIRD FLOOR PLAN - HVAC
M104 ..... ROOF PLAN - HVAC
M201 ..... PARTIAL PLANS - HVAC
M202 ..... SECTION - HVAC
M301 ..... PIPING DETAILS
M302 ..... DETAILS
M401 ..... EQUIPMENT SCHEDULES - HVAC
M402 ..... EQUIPMENT SCHEDULES - HVAC
M403 ..... EQUIPMENT SCHEDULES - HVAC
M404 ..... EQUIPMENT SCHEDULES - HVAC
M501 ..... CONTROL DRAWINGS - HVAC

PLUMBING
P100 ..... PLUMBING GENERAL NOTES AND LEGENDS
P101 ..... PLUMBING PLAN - FIRST FLOOR
P102 ..... PLUMBING PLAN - SECOND FLOOR
P103 ..... PLUMBING PLAN - THIRD FLOOR
P104 ..... PLUMBING PLAN - ROOF
P201 ..... PLUMBING DETAILS
P202 ..... PLUMBING DETAILS
P301 ..... PLUMBING RISERS
P302 ..... PLUMBING RISERS

FIRE PROTECTION
FP101 ..... FIRE PROTECTION PLAN - FIRST FLOOR
FP102 ..... FIRE PROTECTION PLAN - SECOND FLOOR
FP103 ..... FIRE PROTECTION PLAN - THIRD FLOOR

ELECTRICAL
E001 ..... ELECTRICAL SITE PLAN
E101 ..... FIRST FLOOR PLAN LIGHTING
E102 ..... SECOND FLOOR PLAN LIGHTING
E103 ..... THIRD FLOOR PLAN LIGHTING
E201 ..... FIRST FLOOR PLAN POWER
E202 ..... SECOND FLOOR PLAN POWER
E203 ..... THIRD FLOOR PLAN POWER
E301 ..... FIRST FLOOR PLAN HVAC POWER
E302 ..... SECOND FLOOR PLAN HVAC POWER
E303 ..... THIRD FLOOR PLAN HVAC POWER
E401 ..... LIGHTING CONTROLS DETAILS I
E402 ..... LIGHTING CONTROLS DETAILS II
E501 ..... ONE-LINE DIAGRAM - POWER
E502 ..... SYSTEM RISER DIAGRAMS
E503 ..... FIRE ALARM RISER DIAGRAM
E504 ..... SMOKE PURGE SYSTEM WIRING DIAGRAM
E601 ..... PANEL SCHEDULES I
E602 ..... PANEL SCHEDULES II
E603 ..... PANEL SCHEDULES III
E604 ..... PANEL SCHEDULES IV
E701 ..... LEGENDS, SCHEDULES, NOTES

BRACKETT KRENNERICH architects
100 East Huntington, Suite D P.O. Box 1655 Jonesboro, Arkansas 72403-1655
870-932-0571 Fax 870-932-0975 www.bkarchs.com

Commission Number 12406

Date: January 25, 2008

ARKANSAS STATE UNIVERSITY

DONALD W. REYNOLDS CENTER FOR HEALTH SCIENCES

ARKANSAS STATE UNIVERSITY

JONESBORO, ARKANSAS

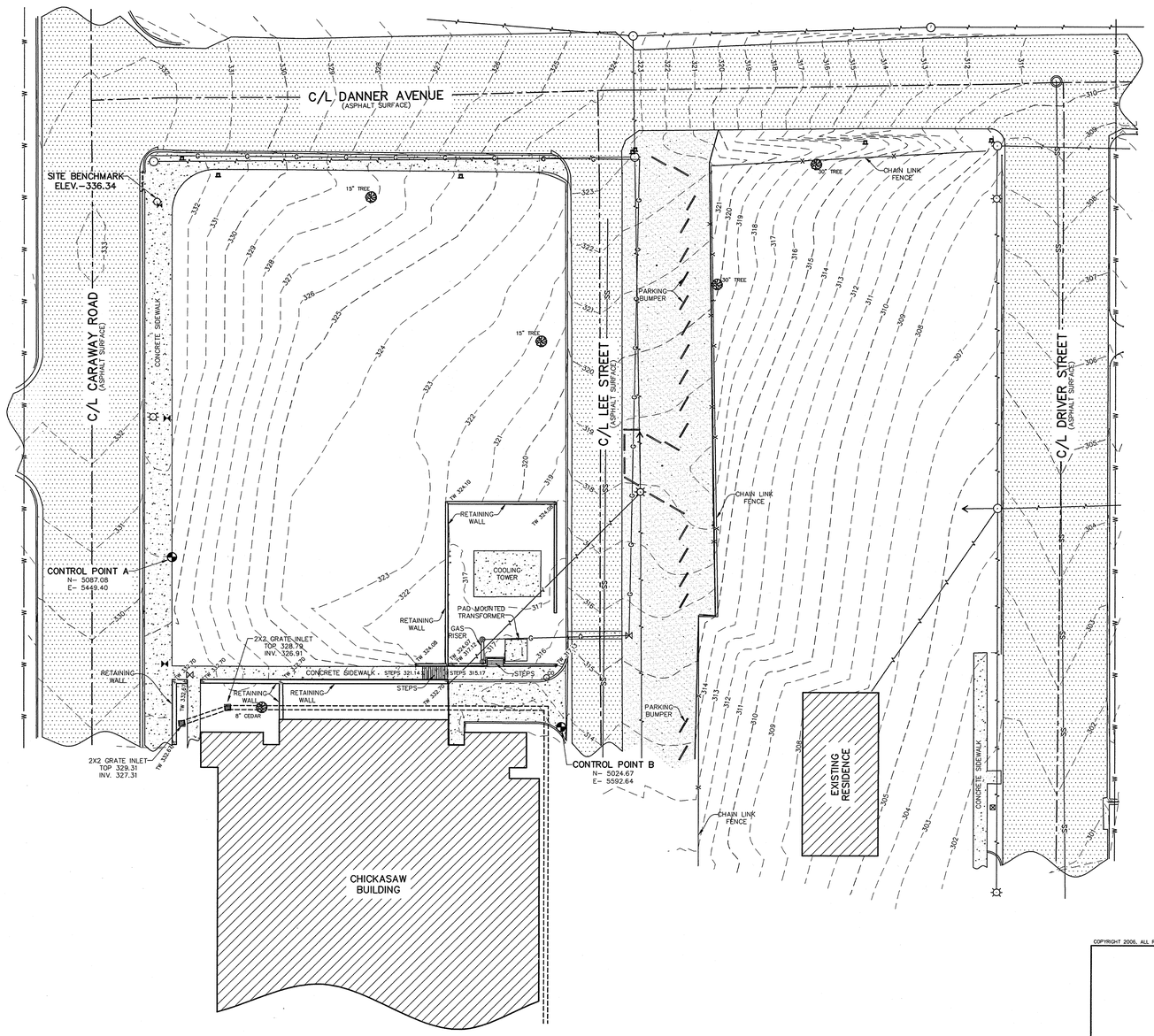

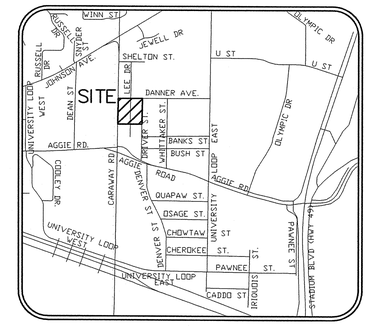

VICINITY MAP
(NOT TO SCALE)

LEGEND

- CONTROL POINT
- LIGHT POLE
- UTILITY POLE
- GUY WIRE
- SANITARY SEWER MANHOLE
- CLEAN OUT
- FIRE HYDRANT
- WATER METER
- WATER VALVE
- GAS VALVE
- GAS RISER
- GRATE INLET
- SIGN
- TREE
- OVERHEAD ELETRIC LINE
- SANITARY SEWER LINE
- WATER LINE
- GAS LINE
- FENCE LINE

GENERAL NOTES:

THE UNDERGROUND UTILITIES SHOWN HAVE BEEN LOCATED BY FIELD MEASUREMENTS AND EXISTING UTILITY MAPS. HAYWOOD, KENWARD, BARE & ASSOCIATES INC. MAKE NO WARRANTY TO THE EXACT LOCATION OF THE UTILITIES SHOWN OR NOT SHOWN ON THIS DRAWING. IT SHALL BE THE RESPONSIBILITY OF THE CONTRACTOR TO VERIFY ANY AND ALL UTILITIES PRIOR TO CONSTRUCTION. CALL ARKANSAS ONE-CALL 1-800-482-8998 BEFORE YOU DIG!

BENCHMARK IS THE TOP OF A FIRE HYDRANT AS SHOWN ON THE PLAT HEREON.

20 0 20 40 60

Scale 1" = 20'

COPYRIGHT 2006, ALL RIGHTS RESERVED

REGISTERED PROFESSIONAL LAND SURVEYOR — STATE OF ARKANSAS — NO. 1048 — SIDNEY G. BARE

CLIENT: ASU

TOPOGRAPHIC SURVEY

DANNER HALL SITE
ARKANSAS STATE UNIVERSITY

HAYWOOD, KENWARD, BARE & ASSOCIATES, INC.
CIVIL ENGINEERING – SURVEYING – PLANNING
3301 E. HIGHLAND DRIVE
JONESBORO, ARKANSAS 72401
TEL 870-932-2019 FAX 870-932-1076

REVISIONS		
DATE	BY	DESCRIPTION

DRAWN BY: JJN	SHEET 1 OF 1
DATE: 04/24/06	SCALE 1"=20'
JOB NO. A001-5503-04	DRAWING NO. 60-32

BRACKETT KRENNERICH architects

100 East Huntington, Suite D P.O. Box 16555 Jonesboro, Arkansas 72403-6555
870-932-5571 Fax 870-932-9975 www.bkarchs.com

Commission Number 12406

C000

Date: January 25, 2008

REFERENCE ONLY

--X__A001_5503_A001_5503_04_DWG WO PAGE 1 - 4/24/06 11:24:35 AM

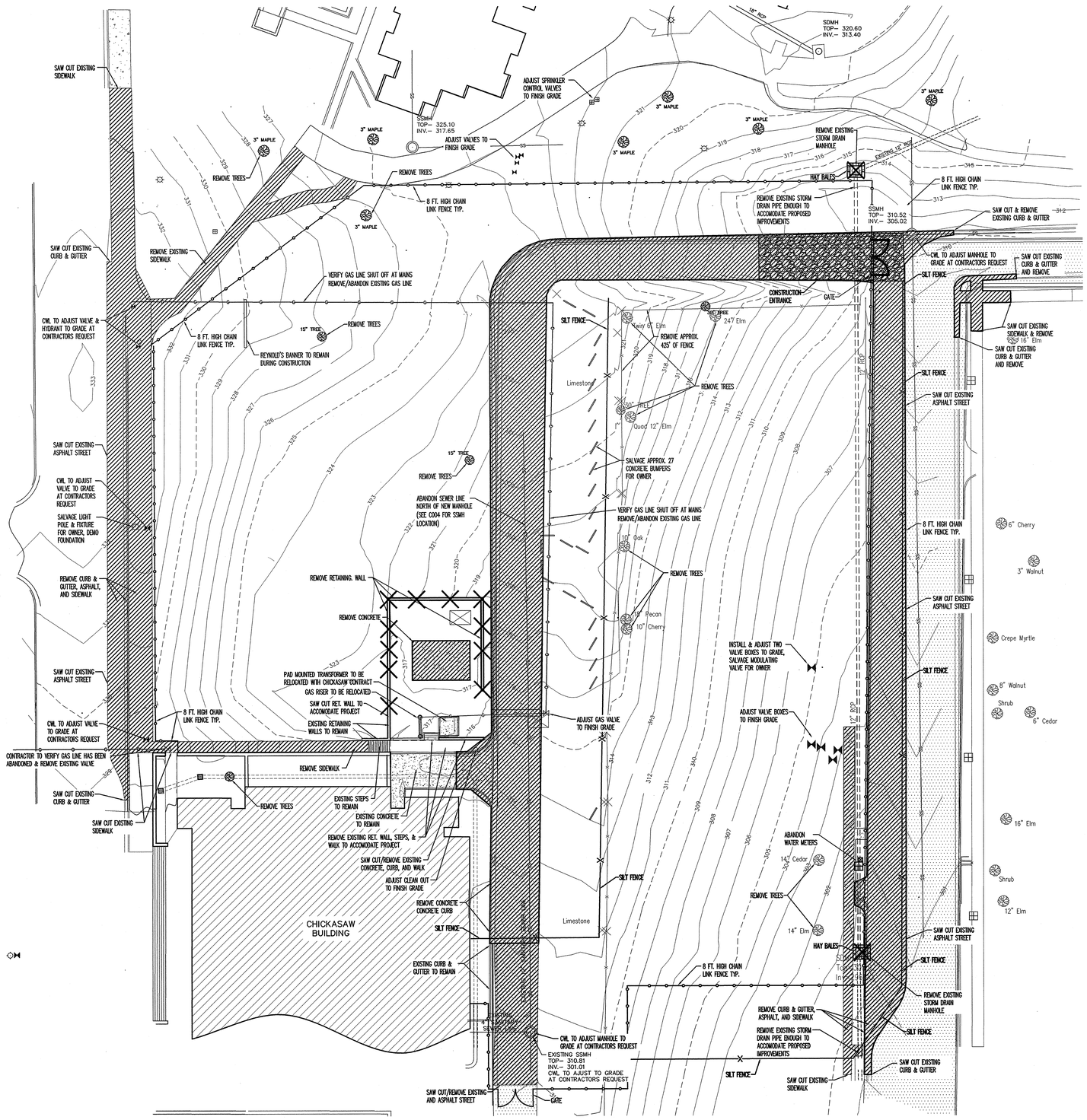

EROSION AND SEDIMENT CONTROL NOTES:

1. INSTALL EROSION AND SEDIMENT CONTROL MEASURES AND CONSTRUCTION ENTRANCES AT LOCATIONS AS INDICATED ON PLANS PRIOR TO EARTHWORK.
2. ALL EROSION AND SEDIMENT CONTROL MEASURES SHALL BE LOCATED AND MAINTAINED SUCH THAT THE LOCATION DOES NOT INTERFERE WITH CONSTRUCTION ACTIVITIES.
3. REFER TO THE CONSTRUCTION STORMWATER POLLUTION PREVENTION PLAN (SWPPP) REPORT FOR IMPLEMENTATION, INSTALLATION, MAINTENANCE AND/OR APPLICATION REQUIREMENTS AND SEQUENCES.
4. CONTRACTOR SHALL BE RESPONSIBLE TO MAINTAIN ALL EROSION AND SEDIMENT CONTROL MEASURES ON SITE AND AT LEAST 20' FROM THE DISTURBED AREAS.
5. CURB INLET SEDIMENT CONTROL SHALL BE PLACED AND MAINTAINED AT EACH INLET.
6. INSTRUCTION/DIRECTION OF THE INSPECTOR SHALL PREVAIL OVER THE CONSTRUCTION SWPP PLAN.

MAINTENANCE AND OPERATION NOTES:

1. AN INSPECTION SHALL BE MADE BY HAYWOOD, KENWARD, BARE AND ASSOCIATES, INC.(INSPECTOR) WITHIN 24 HOURS AFTER A RAINFALL EVENT OF 1/2" OR MORE.
2. ALL OBSERVED DEFICIENCIES IN BEST MANAGEMENT PRACTICES (BMP's) WILL BE RECORDED.
3. SEDIMENT SHALL BE REMOVED BEHIND SILT FENCING OR ROCK CHECK DAMS ONCE SEDIMENT REACHES 1/3 THE HEIGTH OF THE SILT FENCE OR ROCK CHECK DAMS.

GENERAL NOTES:

1. AFTER COMPLETION OF CONSTRUCTION THE NEW RUNOFF COEFFICIENT SHALL BE 0.50.
2. THE STORM WATER POLLUTION PREVENTION MEASURES PRESENTED ON THIS PLAN AND ITS ASSOCIATED REPORT ARE INTENDED TO MINIMIZE POLLUTANT LOADS OCCURRING IN STORM WATER DISCHARGES, FROM THE CONSTRUCTION SITE. THE CONTROL MEASURES SHALL BE INSTALLED AND MAINTAINED BEYOND THE COMPLETION OF ALL CONSTRUCTION ACTIVITIES AND UNTIL 70% OF THE SITE HAS BEEN STABILIZED.
3. IMPLEMENTATION, INSTALLATION, APPLICATION AND MAINTENANCE OF THE STORM WATER POLLUTION PREVENTION CONTROL MEASURES SHALL BE IN COMPLIANCE WITH APPLICABLE STATE OR LOCAL WASTE DISPOSAL, SANITARY SEWER, OR SEPTIC SYSTEM REGULATIONS.

GENERAL NOTES – EROSION BALES

DESCRIPTION: STRAW OR HAY EROSION BALES MAY BE USED AS FILTERS ALONG THE TOE OF FILL SLOPES, AS EROSION CHECKS IN DITCHES, AND AS SEDIMENT TRAPS AT INLETS AND OUTLETS. STRAW BALES MAY BE PLACED BELOW FILL SLOPES TO PROTECT ROADS, AND AS ENGERY DISSIPATERS FOR HIGH VELOCITY RUNOFF.

CONSTRUCTION: BALES SHALL BE LAID TO MAINTAIN TIGHT JOINTS. EROSION BALES WILL NOT FILTER SEDIMENT OUT OF WATER IF THE WATER IS ALLOWED TO FLOW BETWEEN, AROUND, OR UNDERNEATH THE BALES. THE BALES SHOULD BE ENTRENCHED 6 INCHES AND ANCHORED SECURELY.

MAINTENANCE: EROSION BALES REQUIRE FREQUENT INSPECTION AS THEY DETERIORATE QUICKLY AND MAY NEED TO BE REPLACED. WHEN NO LONGER NEEDED, THE ACCUMULATED SEDIMENT SHALL BE SPREAD, SEEDED, AND MULCHED WITH THE EROSION BALES AS APPROVED BY THE ENGINEER.

HAY BALES ARE A TEMPORARY MEASURE ONLY. THEY SHALL BE INSTALLED, REPAIRED OR REPLACED AT THE DIRECTION OF THE ENGINEER.

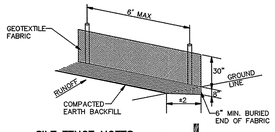

SILT FENCE NOTES:
GEOTEXTILE FABRIC SHALL BE SPLICED TOGETHER WITH A SEWN SEAM ONLY AS-SUPPLIED-PIECE, OR TWO SECTIONS OF FENCE MAY BE LAPPED INSTEAD. PAYMENT OF ADDITIONAL MATERIAL FOR OVERLAP WILL NOT BE MADE.

SILT FENCE DETAIL
N.T.S.

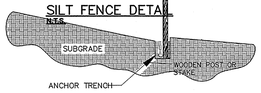

NOTES:
1. GEOTEXTILE ANCHORED IN TRENCH A MINIMUM OF 15 CM (6 IN). TRENCH BACKFILLED WITH TAMPED NATURAL SOIL.
2. DEPENDING UPON CONFIGURATION, ATTACH GEOTEXTILE TO STEEL POST WITH TIE WIRES OR WOOD POSTS WITH STAPLES.

SILT FENCE CROSS SECTION
N.T.S.

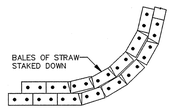

DOUBLE ROW OF BALES OF STRAW TO BE PLACED PRIOR TO THE START OF ROUGH GRADING. BALES ARE TO BE PLACED AS COLOSELY TOGETHER AS POSSIBLE IN ORDER TO PROVIDE MAXIMUM PROTECTION.

PLAIN VIEW

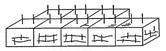

ISOMETRIC

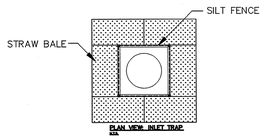

PLAN VIEW INLET TRAP
NOTES:
1. INSTALL SILT FENCE AFTER CONSTRUCTION OF INLET ACCORDING TO TYPICAL SILT FENCE DETAIL.
2. INSTALL STRAW BALES OUTSIDE OF SILT FENCE CCORDING TO THE TYPICAL STRAW BALE DETAIL.

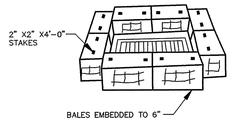

INSTALL AFTER INLETS ARE CONSTRUCTED BEFORE LANDSCAPING IS COMPLETED.

INLET TRAP
N.T.S.

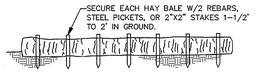

TEMPORARY SEDIMENT BARRIER
N.T.S.

NOTES:
WIRE OR NYLON BOUND BALES ARE REQUIRED FOR DURABILITY.

REQUIRED AT LOW AREAS OF SITE WHERE SURFACE DRAINAGE OCCURES DURING GRADING OPERATIONS & PRIOR TO LANDSCAPING COMPLETION.

STRAW BALE DETAILS
N.T.S.

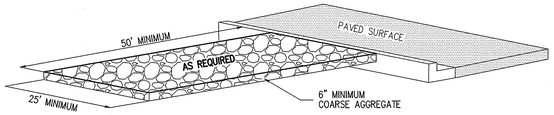

CONSTRUCTION ENTRANCE DETAIL
N.T.S.

PROFESSIONAL CERTIFICATION:
I CERTIFY UNDER PENALTY OF LAW THAT THIS DOCUMENT AND ALL ATTACHMENTS WERE PREPARED UNDER MY DIRECTION OR SUPERVISION IN ACCORDANCE WITH A SYSTEM DESIGNED TO ASSURE THAT QUALIFIED PERSONNEL PROPERLY GATHER AND EVALUATE THE INFORMATION SUBMITTED. BASED ON MY INQUIRY OF THE PERSON OR PERSONS WHO MANAGED THE SYSTEMS, OR THOSE PERSONS DIRECTLY RESPONSIBLE FOR GATHERING THE INFORMATION, THE INFORMATION SUBMITTED IS, TO THE BEST OF MY KNOWLEDGE AND BELIEF, TRUE, ACCURATE, AND COMPLETE. I AM AWARE THAT THERE ARE SIGNIFICANT PENALTIES FOR SUBMITTING FALSE INFORMATION, INCLUDING THE POSSIBILITY OF FINE AND IIMPRISONMENT FOR KNOWING VIOLATIONS.

ROBERT HENDRIX, P.E. 6052 PROJECT ENGINEER

OWNER/CONTRACTOR CERTIFICATION:
I CERTIFY UNDER PENALTY OF LAW THAT I UNDERSTAND THE TERMS AND CONDITIONS OF THE GENERAL NATIONAL POLLUTANT DISCHARGE ELIMINATION SYSTEM (NPDES) PERMIT THAT AUTHORIZES THE STORM WATER DISCHARGES ASSOCIATED WITH INDUSTRIAL ACTIVITY FROM THE CONSTRUCTION SITE IDENTIFIED AS PART OF THIS CERTIFICATION.

OWNER/CONTRACTOR DATE

20 0 20 40 60
Scale 1" = 20'

Know what's below. Call before you dig.

ARKANSAS STATE UNIVERSITY

DONALD W. REYNOLDS CENTER FOR HEALTH SCIENCES
ARKANSAS STATE UNIVERSITY
JONESBORO, ARKANSAS

BRACKETT KRENNERICH architects
103 East Huntington, Suite D · P.O. Box 1655 · Jonesboro, Arkansas 72403-1655 · 870.932.0571 · Fax 870.932.5975 · www.bkarchs.com

HKB
HAYWOOD, KENWARD, BARE AND ASSOCIATES, INC.
CIVIL ENGINEERS—SURVEYORS PLANNERS
1801 LATOURETTE DRIVE
JONESBORO, AR 72404
TEL 1.870.932.2019
FAX 1.870.932.1078

DEMOLITION & STORM WATER POLLUTION PREVENTION PLAN
JOB NO. B021-0005

Commission Number 12406

C001

Date: January 25, 2008

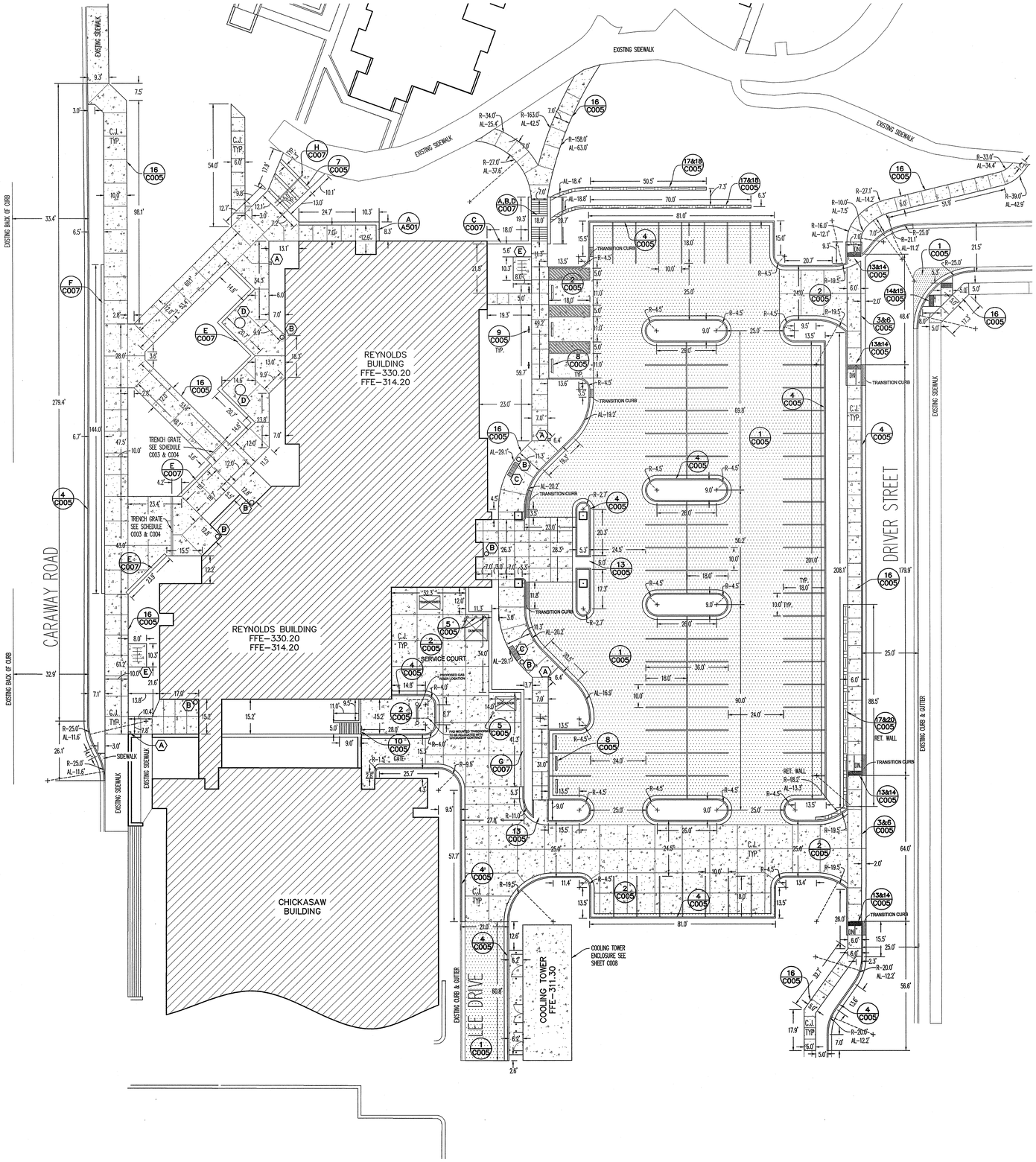

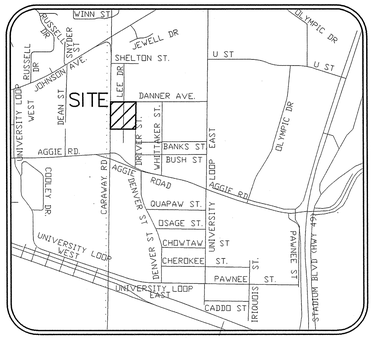

VICINITY MAP
(NOT TO SCALE)

Legend:

- (A) ASH URN*
- (B) TRASH RECEPTACLE*
- (C) BENCH*
- (D) TABLE W/ SEATING*
- (E) BIKE RACK*

* SEE SPECIFICATIONS

20 0 20 40 60

Scale 1" = 20'

811 Know what's below. Call before you dig.

ASU ARKANSAS STATE UNIVERSITY

DONALD W. REYNOLDS CENTER FOR HEALTH SCIENCES

ARKANSAS STATE UNIVERSITY
JONESBORO, ARKANSAS

BRACKETT KRENNERICH architects
100 East Huntington, Suite D P.O. Box 1355 Jonesboro, Arkansas 72403-1655
870-932-0571 Fax 870-932-0976 www.bkarchs.com

HKB
HAYWOOD, KENWARD, BARE AND ASSOCIATES, INC.
CIVIL ENGINEERS–SURVEYORS PLANNERS
1801 LATOURETTE DRIVE
JONESBORO, ARKANSAS 72404
PH. 1.870.932.2018
FAX 1.870.932.1076

SITE PLAN
JOB NO. B021-0005

Commission Number
12406

C002

Date: January 25, 2008

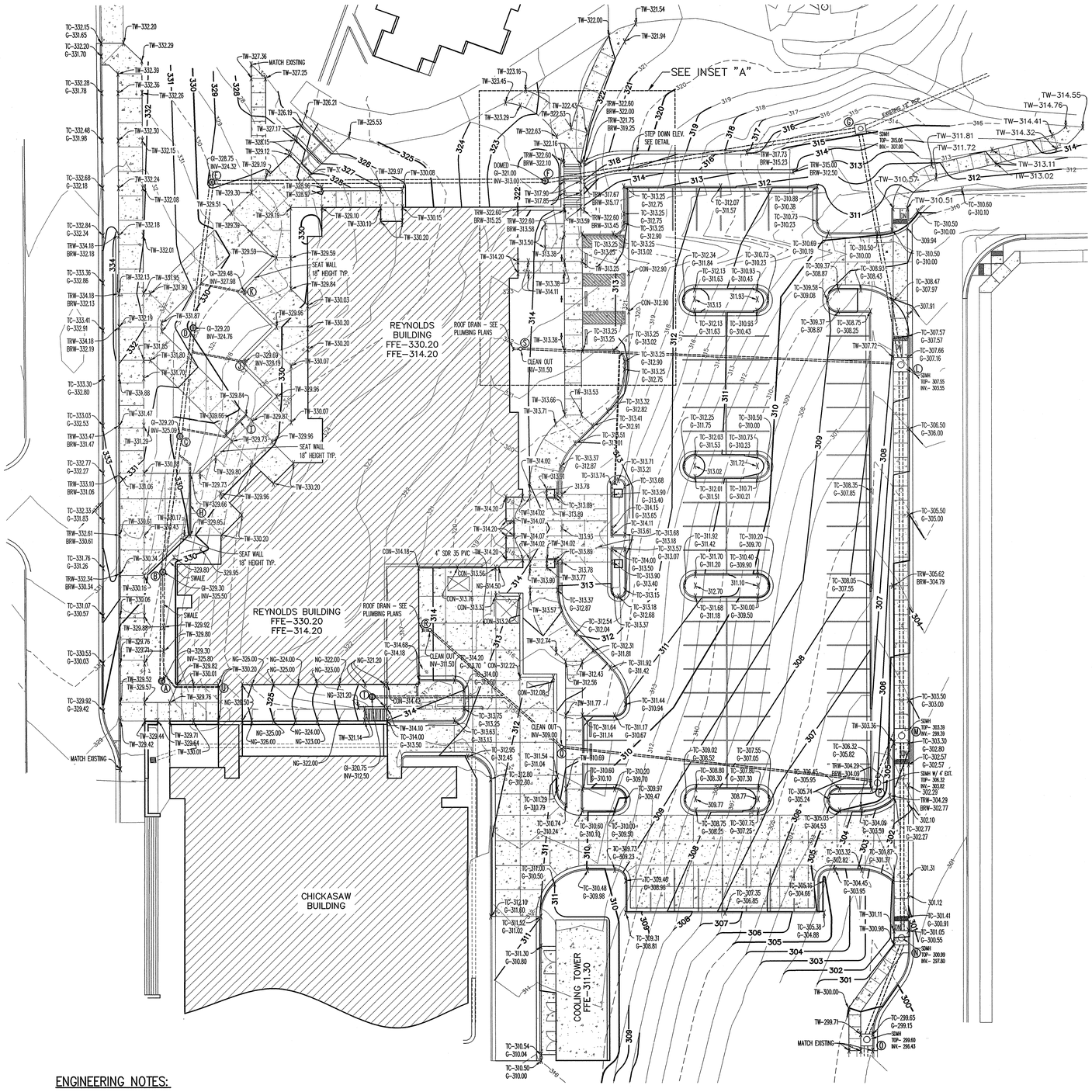

DRAINAGE STRUCTURE SCHEDULE

ITEM	DESCRIPTION	INVERT	TOP	GRATE STYLE	DETAIL #
A	NYLOPLAST INLINE DRAIN W/ GRATE	325.80	329.30	18" STANDARD H-20 RATED	1 & 7 /C006
B	NYLOPLAST INLINE DRAIN W/ GRATE	325.50	329.30	18" STANDARD H-20 RATED	1 & 7 /C006
C	NYLOPLAST INLINE DRAIN W/ GRATE	325.09	329.20	18" STANDARD H-20 RATED	1 & 7 /C006
D	NYLOPLAST INLINE DRAIN W/ GRATE	324.76	329.20	18" STANDARD H-20 RATED	1 & 7 /C006
E	NYLOPLAST INLINE DRAIN W/ GRATE	324.32	328.75	18" STANDARD H-20 RATED	5 & 7 /C006
F	STORM DRAIN MANHOLE W/ DOMED GRATE	313.00	321.00	24" DOMED NEENAH R-2560-D2	5 & 9 /C006
G	STORM DRAIN MANHOLE W/ RING & COVER	307.00	315.06	NA	5 / C006
H	ACO TRENCH DRAIN SK01 PART # 94022	VARIES	VARIES	ADA DUCTILE IRON POWERLOK	NA
I	ACO TRENCH DRAIN SK01 PART # 94022	VARIES	VARIES	ADA DUCTILE IRON POWERLOK	NA
J	NYLOPLAST INLINE DRAIN W/ GRATE	328.19	329.69	12" STANDARD H-20 RATED	1 & 6 /C006
K	NYLOPLAST INLINE DRAIN W/ GRATE	327.98	329.48	12" STANDARD H-20 RATED	1 & 6 /C006
L	STORM DRAIN MANHOLE W/ RING & COVER	303.55	307.55	NA	11 / C005
M	STORM DRAIN MANHOLE W/ RING & COVER	299.39	303.39	NA	11 / C005
N	STORM DRAIN MANHOLE W/ RING & COVER	297.80	300.99	NA	11 / C005
O	STORM DRAIN MANHOLE W/ RING & COVER	EXISTING	299.60	NA	11 / C005
P	STORM DRAIN MANHOLE W/ 4' INLET EXTENSION	303.82	306.32	NA	11 & 12/C005
Q	8" ROOF DRAIN CLEAN OUT	309.00	311.50	NA	2 / C006
R	8" ROOF DRAIN CLEAN OUT	311.50	314.05	NA	2 / C006
S	8" ROOF DRAIN CLEAN OUT	311.50	314.10	NA	2 / C006
T	NYLOPLAST INLINE DRAIN W/ GRATE	312.50	320.75	18" STANDARD H-20 RATED	1 & 7 /C006

DRAINAGE PIPE SCHEDULE

PIPE SECTION	DIAMETER	MATERIAL	LENGTH	SLOPE
A-B	12"	SDR 26 PVC	44'	0.7%
B-C	12"	SDR 26 PVC	56'	0.7%
C-D	12"	SDR 26 PVC	44'	0.7%
D-E	12'	SDR 26 PVC	60'	0.7%
E-F	12"	SDR 26 PVC	139'	8.1%
F-G	12"	SDR 26 PVC	341'	1.6%
G-L	24"	RCP	96'	3.6%
L-M	24"	RCP	150'	2.8%
M-N	24"	RCP	79'	2.0%
N-O	24"	RCP	40'	2.5%
P-M	12"	RCP	21'	21%
R-Q	8"	SDR 26 PVC	73'	3.4%
Q-P	8"	SDR 26 PVC	130'	4.0%
S-L	8"	SDR 26 PVC	155'	4.2%
FROM H	6"	SDR 26 PVC	APPROX. 11'	2.0% MIN
FROM I	6"	SDR 26 PVC	APPROX. 19'	2.0% MIN
FROM J	6"	SDR 26 PVC	APPROX. 23'	2.0% MIN
FROM K	6"	SDR 26 PVC	APPROX. 18'	2.0% MIN
FROM T	6"	SDR 26 PVC	APPROX. 55'	1.0% MIN
FROM U	3"	SCH 40 PVC	APPROX. 25'	1.0% MIN

LEGEND

TW	TOP OF WALK
TC	TOP OF CURB
G	GUTTER
TRW	TOP OF RET. WALL
BRW	BOTTOM OF RET. WALL
NG	NATURAL GROUND
CON	TOP OF CONCRETE
GI	GRATE INLET RIM
INV	INVERT ELEVATION
X	ELEVATION LOCATION
X	SPOT ELEVATION
SDMH	STORM DRAIN MANHOLE
FFE	FINISHED FLOOR ELEV.

PROPOSED INDEX CONTOUR — 305 —

PROPOSED INTERMEDIATE CONTOUR — 304 —

EXISTING INDEX CONTOUR — 310 —

EXISTING INTERMEDIATE CONTOUR — 309 —

SWALE FLOW LINE

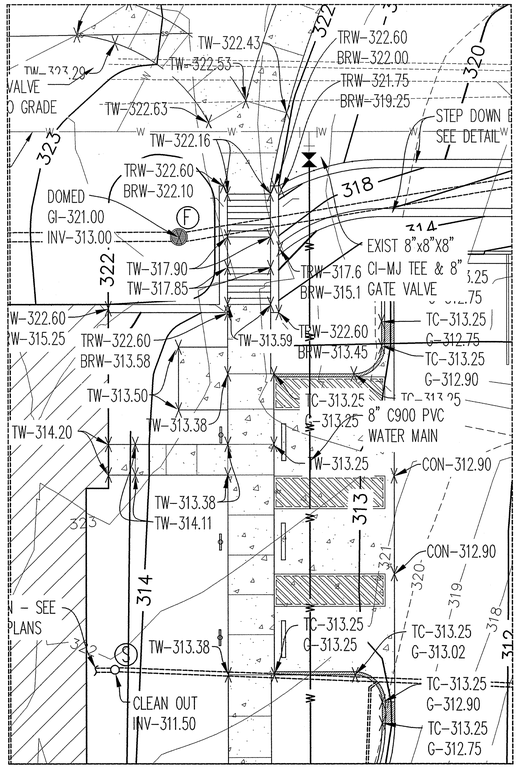

INSET "A" SCALE 1" = 10'

ENGINEERING NOTES:

1. CONTRACTOR IS RESPONSIBLE FOR INSTALLING AND MAINTAINING ADEQUATE EROSION/SEDIMENTATION CONTROL DURING ALL PHASES OF CONSTRUCTION.

2. CONTRACTOR IS RESPONSIBLE FOR KEEPING MUD AND DEBRIS OFF ALL STREETS AND OFF OF PAVED DRIVEWAYS WHERE APPLICABLE. CLEAN UP IS REQUIRED DAILY.

3. CONTRACTOR IS RESPONSIBLE FOR THE REPLACEMENT OF SIDEWALK, CURB AND GUTTER AND/OR ASPHALT/CONCRETE DAMAGED DURING CONSTRUCTION.

4. DEVIATION FROM ENGINEERING DESIGN PLANS IS NOT PERMITTED. ANY CHANGE IN THE CONSTRUCTION DOCUMENTS THAT ARE NOT APPROVED BY THE ENGINEER, WILL RESULT IN CONSTRUCTION TERMINATION UNTIL A RESOLUTION IS MET. ANY UNAPPROVED MODIFICATION NEEDED TO UPDATE DESIGN PLANS ACCORDING TO CITY REQUIREMENTS, WILL RESULT IN ADDITIONAL DESIGN EXPENSES TO THE OWNER.

5. CONTRACTOR SHALL NOTIFY THE ENGINEER AND OWNER/DEVELOPER OF ANY INFORMATION FOUND IN THE FIELD THAT IS DIFFERENT FROM WHAT IS SHOWN ON THESE DESIGN PLANS.

6. THE GRADING OF THE PROPERTY SHALL BE LIMITED TO DAYLIGHT HOURS.

7. ALL FILL SHALL BE PLACED IN 8" MAXIMUM LIFTS AND COMPACTED TO 95% MODIFIED PROCTOR UNLESS OTHERWISE STATED IN SPECIFICATIONS AND/OR DETAILS.

8. ALL DISTURBED AREAS ARE TO BE SEEDED AND STABILIZED UPON COMPLETION OF EARTHWORK.

9. CONTRACTOR IS RESPONSIBLE FOR ALL CITY, STATE, OR FEDERAL PERMIT FEES ASSOCIATED WITH CONSTRUCTION.

811 Know what's below. Call before you dig.

20 0 20 40 60

Scale 1" = 20'

ARKANSAS STATE UNIVERSITY

DONALD W. REYNOLDS CENTER FOR HEALTH SCIENCES

ARKANSAS STATE UNIVERSITY

JONESBORO, ARKANSAS

BRACKETT KRENNERICH architects

100 East Huntington, Suite D - P.O. Box 1955 - Jonesboro, Arkansas 72403-1955

870-932-0071 Fax 870-932-0976 www.bkarchs.com

HKB

HAYWOOD, KENWARD, BARE AND ASSOCIATES, INC.
CIVIL ENGINEERS-SURVEYORS PLANNERS
1801 LAFOURETTE DRIVE
JONESBORO, AR 72404
TEL 1.870.932.2018
FAX 1.870.932.1078

GRADING PLAN

JOB NO. B021-0005

Commission Number 12406

C003

Date: January 25, 2008

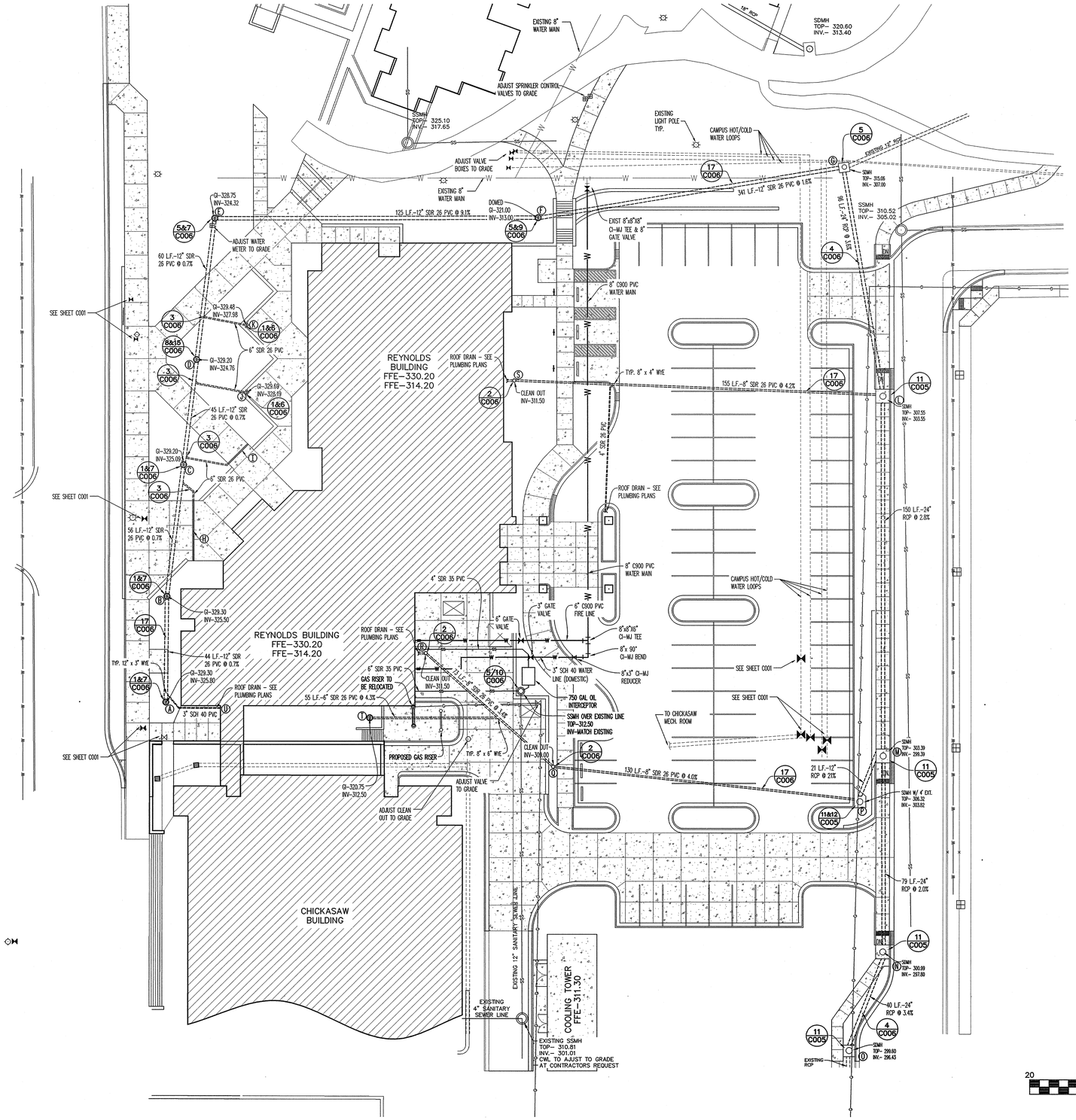

LEGEND

- CONTROL POINT
- LIGHT POLE
- UTILITY POLE
- GUY WIRE
- SANITARY SEWER MANHOLE
- CLEAN OUT
- FIRE HYDRANT
- WATER METER
- WATER VALVE
- GAS VALVE
- GAS RISER
- GRATE INLET
- SIGN
- TREE
- SPRINKLER VALVE
- OVERHEAD ELETRIC LINE
- SANITARY SEWER LINE
- WATER LINE
- GAS LINE
- FENCE LINE

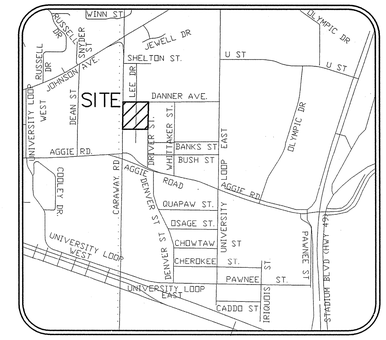

VICINITY MAP
(NOT TO SCALE)

DRAINAGE STRUCTURE SCHEDULE

ITEM	DESCRIPTION	INVERT	TOP	GRATE STYLE	DETAIL #
A	NYLOPLAST INLINE DRAIN W/ GRATE	325.80	329.30	18" STANDARD H–20 RATED	1 & 7 /C006
B	NYLOPLAST INLINE DRAIN W/ GRATE	325.50	329.30	18" STANDARD H–20 RATED	1 & 7 /C006
C	NYLOPLAST INLINE DRAIN W/ GRATE	325.09	329.20	18" STANDARD H–20 RATED	1 & 7 /C006
D	NYLOPLAST INLINE DRAIN W/ GRATE	324.76	329.20	18" STANDARD H–20 RATED	1 & 7 /C006
E	NYLOPLAST INLINE DRAIN W/ GRATE	324.32	328.75	18" STANDARD H–20 RATED	5 & 7 /C006
F	STORM DRAIN MANHOLE W/ DOMED GRATE	313.00	321.00	24" DOMED NEENAH R–2560–D2	5 & 9 /C006
G	STORM DRAIN MANHOLE W/ RING & COVER	307.00	315.06	NA	5 / C006
H	ACO TRENCH DRAIN SKO1 PART # 94022	VARIES	VARIES	ADA DUCTILE IRON POWERLOK	NA
I	ACO TRENCH DRAIN SKO1 PART # 94022	VARIES	VARIES	ADA DUCTILE IRON POWERLOK	NA
J	NYLOPLAST INLINE DRAIN W/ GRATE	328.19	329.69	12" STANDARD H–20 RATED	1 & 6 /C006
K	NYLOPLAST INLINE DRAIN W/ GRATE	327.98	329.48	12" STANDARD H–20 RATED	1 & 6 /C006
L	STORM DRAIN MANHOLE W/ RING & COVER	303.55	307.55	NA	11 / C005
M	STORM DRAIN MANHOLE W/ RING & COVER	299.39	303.39	NA	11 / C005
N	STORM DRAIN MANHOLE W/ RING & COVER	297.80	300.99	NA	11 / C005
O	STORM DRAIN MANHOLE W/ RING & COVER	EXISTING	299.60	NA	11 / C005
P	STORM DRAIN MANHOLE W/ 4' INLET EXTENSION	303.82	306.32	NA	11 & 12/C005
Q	8" ROOF DRAIN CLEAN OUT	309.00	311.50	NA	2 / C006
R	8" ROOF DRAIN CLEAN OUT	311.50	314.05	NA	2 / C006
S	8" ROOF DRAIN CLEAN OUT	311.50	314.10	NA	2 / C006
T	NYLOPLAST INLINE DRAIN W/ GRATE	312.50	320.75	18" STANDARD H–20 RATED	1 & 7 /C006

DRAINAGE PIPE SCHEDULE

PIPE SECTION	DIAMETER	MATERIAL	LENGTH	SLOPE
A–B	12"	SDR 26 PVC	44'	0.7%
B–C	12"	SDR 26 PVC	56'	0.7%
C–D	12"	SDR 26 PVC	44'	0.7%
D–E	12'	SDR 26 PVC	60'	0.7%
E–F	12"	SDR 26 PVC	139'	8.1%
F–G	12"	SDR 26 PVC	341'	1.6%
G–L	24"	RCP	96'	3.6%
L–M	24"	RCP	150'	2.8%
M–N	24"	RCP	79'	2.0%
N–O	24"	RCP	40'	2.5%
P–M	12"	RCP	21'	21%
R–Q	8"	SDR 26 PVC	73'	3.4%
Q–P	8"	SDR 26 PVC	130'	4.0%
S–L	8"	SDR 26 PVC	155'	4.2%
FROM H	6"	SDR 26 PVC	APPROX. 11'	2.0% MIN
FROM I	6"	SDR 26 PVC	APPROX. 19'	2.0% MIN
FROM J	6"	SDR 26 PVC	APPROX. 23'	2.0% MIN
FROM K	6"	SDR 26 PVC	APPROX. 18'	2.0% MIN
FROM T	6"	SDR 26 PVC	APPROX. 55'	1.0% MIN
FROM U	3"	SCH 40 PVC	APPROX. 25'	1.0% MIN

20 0 20 40 60

Scale 1" = 20'

811 Know what's below. Call before you dig.

ASU ARKANSAS STATE UNIVERSITY

DONALD W. REYNOLDS CENTER FOR HEALTH SCIENCES

ARKANSAS STATE UNIVERSITY

JONESBORO, ARKANSAS

BRACKETT KRENNERICH architects

100 East Huntington, Suite LP P.O. Box 1555 Jonesboro, Arkansas 72403-1555

870-932-0575 Fax 870-932-0976 www.bkarchitects.com

HKB
HAYWOOD, KENWARD, BARE AND ASSOCIATES, INC.
CIVIL ENGINEERS–SURVEYORS PLANNERS
1801 LATOURETTE DRIVE
JONESBORO, AR 72404
TEL 1.870.932.2019
FAX 1.870.932.1076

UTILITY & DRAINAGE PLAN
JOB NO. B021–0005

Commission Number 12406

C004

Date: January 25, 2008

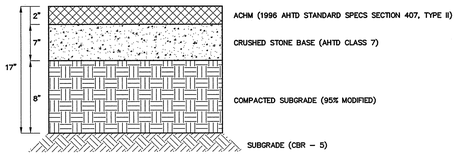

1 TYPICAL ASPHALT PAVING DETAIL

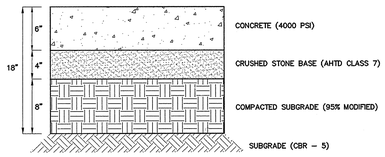

2 CONCRETE PAVING DETAIL
N.T.S.

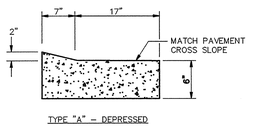

NOTE:
INSTALL DEPRESSED CURB & GUTTER AT DRIVEWAYS AS SPECIFIED IN THE PLANS, OR AS DIRECTED BY THE ENGINEER.

3 DEPRESSED TYPE CURB & GUTTER
N.T.S.

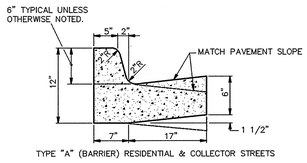

NOTE: CONTRACTION AND EXPANSION JOINTS SHALL BE CONSTRUCTED IN ACCORDANCE WITH THE PLANS AND SPECIFICATIONS.

4 BARRIER TYPE CURB & GUTTER
N.T.S.

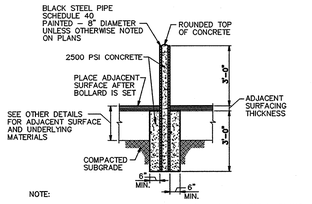

NOTE:
1. SELECT PIPE DIAMETER AND PAINT COLOR AS CALLED FOR IN PLANS. USE 8" AS MAXIMUM UNLESS EXTREMELY HEAVY LOADINGS ARE ANTICIPATED. USE 4" ONLY WHERE VERY LIGHT LOADS ARE ANTICIPATED.
2. BOLLARDS NOT TO BE USED IN OR NEAR STREET AREAS.

5 BOLLARD DETAIL
N.T.S.

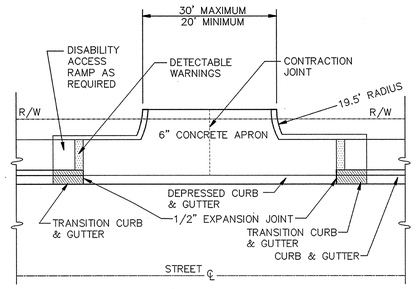

6 DRIVEWAY APRON DETAIL
N.T.S.

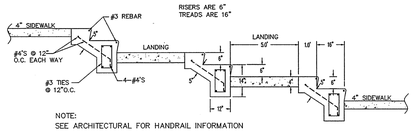

NOTE:
SEE ARCHITECTURAL FOR HANDRAIL INFORMATION

7 SIDEWALK STEPS SECTION DETAIL
N.T.S.

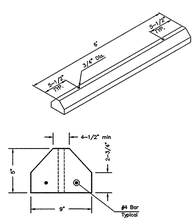

8 WHEET STOP DETAIL
N.T.S.

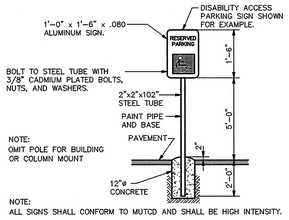

NOTE:
OMIT POLE FOR BUILDING OR COLUMN MOUNT

NOTE:
ALL SIGNS SHALL CONFORM TO MUTCD AND SHALL BE HIGH INTENSITY.

9 ACCESSIBLE SIGN DETAIL
N.T.S.

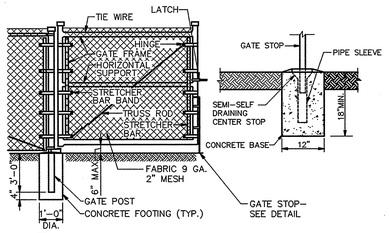

10 CHAIN LINK GATE DETAIL
N.T.S.

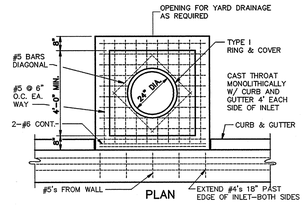

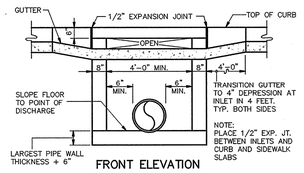

NOTE:
PLACE 1/2" EXP. JT. BETWEEN INLETS AND CURB AND SIDEWALK SLABS

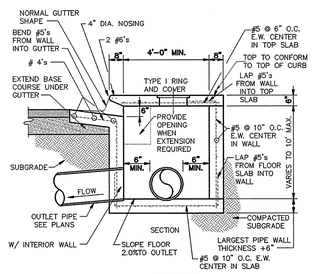

SECTION

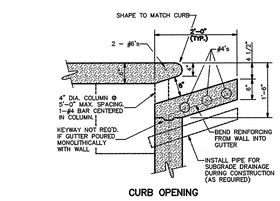

CURB OPENING

11 CURB INLET DETAIL
N.T.S.

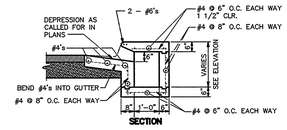

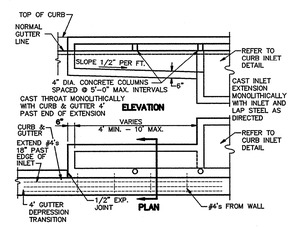

12 CURB INLET EXTENSION
N.T.S.

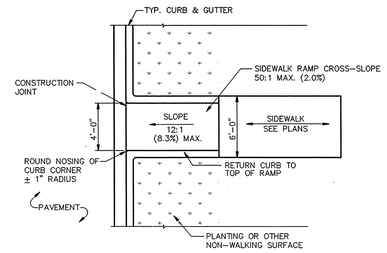

13 SIDEWALK RAMP DETAIL
N.T.S.

GENERAL NOTES FOR DETECTABLE WARNING DEVICES
THE DETECTABLE WARNING DEVICE SHALL BE LOCATED SO THAT THE NEAREST EDGE OF THE DEVICE IS 6 TO 8 INCHES FROM THE FACE OF THE CURB.
TRUNCATED DOMES ARE THE ACCEPTED WARNING SURFACE FOR USE IN THE FOLLOWING GEOMETRIC CONFIGURATION SHOWN:
DOMES SHALL BE ALIGNED ON A SQUARE GRID IN THE PREDOMINANT DIRECTION OF TRAVEL TO PERMIT WHEELS TO ROLL BETWEEN DOMES.
DETECTABLE WARNING DEVICE SHALL BE 24 INCHES IN THE DIRECTION OF TRAVEL AND EXTEND THE FULL WIDTH OF THE CURB RAMP OR FLUSH SURFACE.
DETECTABLE WARNING DEVICE SHALL BE ON THE AHTD QUALIFIED PRODUCTS LIST FOR CAST-IN-PLACE TACTILE PANELS (ADA DETECTABLE WARNING).

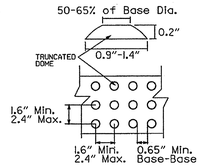

14 DETECTABLE WARNING DETAIL
N.T.S.

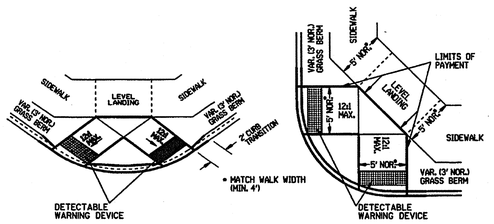

15 SIDEWALK RAMP DETAIL
N.T.S.

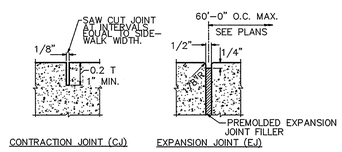

NOTE: PROVIDE EXPANSION JOINT WHERE SIDEWALK ABUTTS CURB AND NEXT TO STRUCTURES AND DRIVEWAYS.

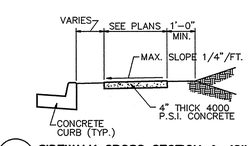

16 SIDEWALK CROSS SECTION & JOINT DETAIL
N.T.S.

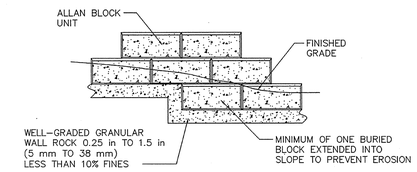

TYPICAL ALLAN BLOCK BASE COURSE STEP UP

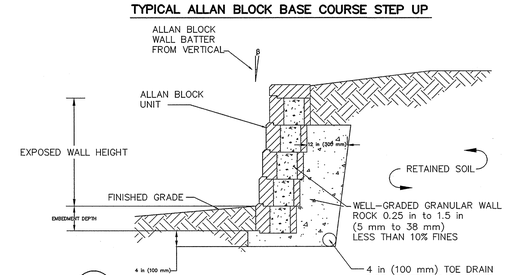

17 TYPICAL ALLAN BLOCK GRAVITY WALL
N.T.S.

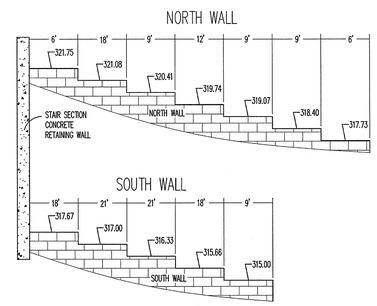

18 ALLAN BLOCK STEP DOWN ELEVATIONS WALLS NORTH OF PARKING LOT
N.T.S.

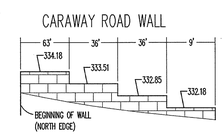

19 ALLAN BLOCK STEP DOWN ELEVATIONS SIDEWALK ALONG CARAWAY
N.T.S.

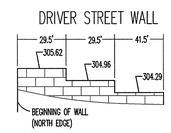

20 ALLAN BLOCK STEP DOWN ELEVATIONS SIDEWALK EAST OF PARKING LOT
N.T.S.

ARKANSAS STATE UNIVERSITY

DONALD W. REYNOLDS CENTER FOR HEALTH SCIENCES

ARKANSAS STATE UNIVERSITY
JONESBORO, ARKANSAS

BRACKETT KRENNERICH architects

HKB
HAYWOOD, KENWARD, BARE AND ASSOCIATES, INC.
CIVIL ENGINEERS–SURVEYORS PLANNERS
1801 LATOURETTE DRIVE
JONESBORO, AR 72404
TEL 1.870.932.0576
FAX 1.870.932.1078

CIVIL DETAILS
JOB NO. 8021–0005

Commission Number
12406

C005

Date: January 25, 2008

870-932-0576 Fax:870-932-1078 www.hkpeople.com

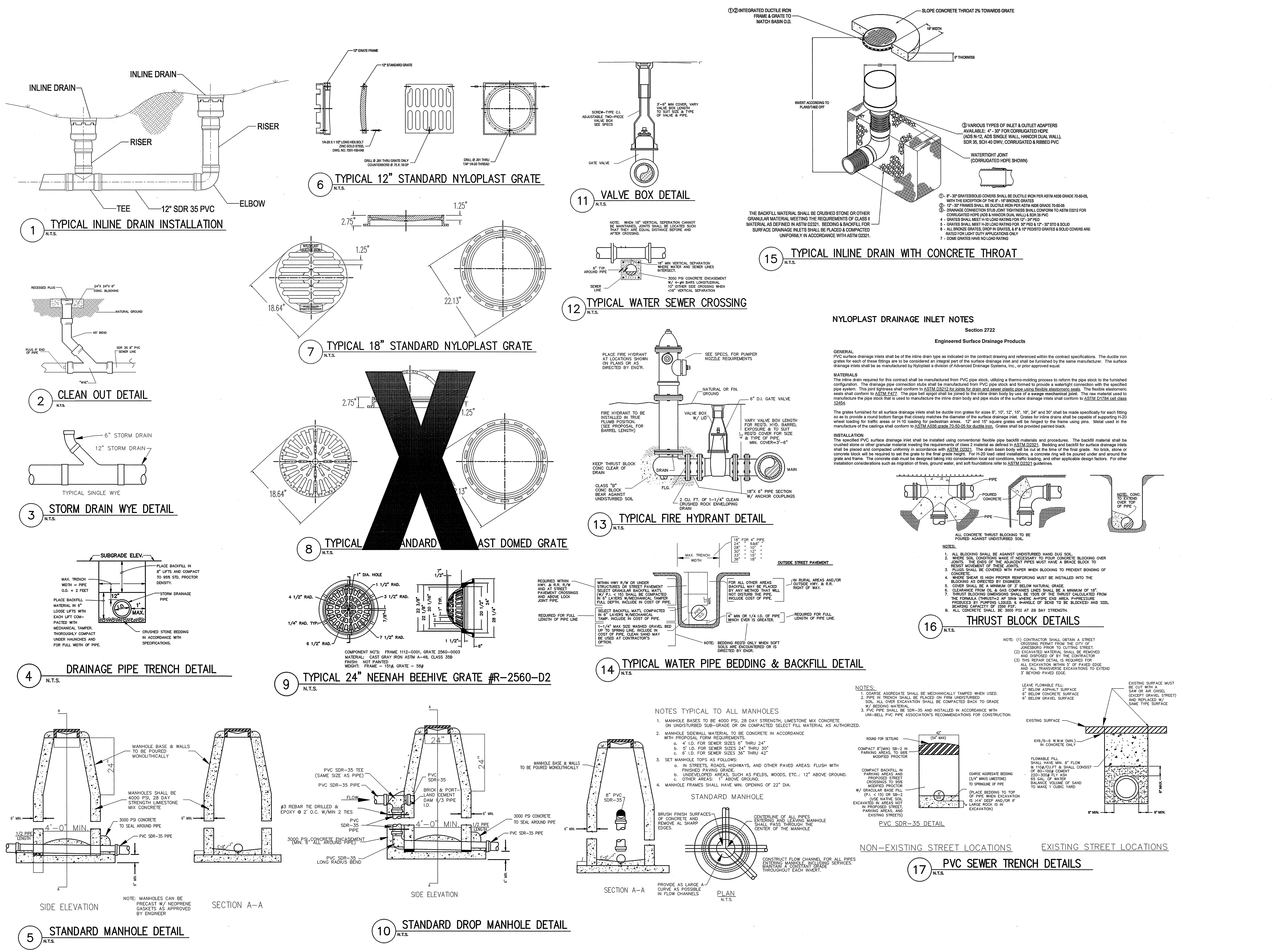

NYLOPLAST DRAINAGE INLET NOTES

Section 2722

Engineered Surface Drainage Products

GENERAL
PVC surface drainage inlets shall be of the inline drain type as indicated on the contract drawing and referenced within the contract specifications. The ductile iron grates for each of these fittings are to be considered an integral part of the surface drainage inlet and shall be furnished by the same manufacturer. The surface drainage inlets shall be as manufactured by Nyloplast a division of Advanced Drainage Systems, Inc., or prior approved equal.

MATERIALS
The inline drain required for this contract shall be manufactured from PVC pipe stock, utilizing a thermo-molding process to reform the pipe stock to the furnished configuration. The drainage pipe connection stubs shall be manufactured from PVC pipe stock and formed to provide a watertight connection with the specified pipe system. This joint tightness shall conform to ASTM D3212 for joints for drain and sewer plastic pipe using flexible elastomeric seals. The flexible elastomeric seals shall conform to ASTM F477. The pipe bell spigot shall be joined to the inline drain body by use of a **swage mechanical joint**. The raw material used to manufacture the pipe stock that is used to manufacture the inline drain body and pipe stubs of the surface drainage inlets shall conform to ASTM D1784 cell class 12454.

The grates furnished for all surface drainage inlets shall be ductile iron grates for sizes 8", 10", 12", 15", 18", 24" and 30" shall be made specifically for each fitting so as to provide a round bottom flange that closely matches the diameter of the surface drainage inlet. Grates for inline drains shall be capable of supporting H-20 wheel loading for traffic areas or H-10 loading for pedestrian areas. 12" and 15" square grates will be hinged to the frame using pins. Metal used in the manufacture of the castings shall conform to ASTM A536 grade 70-50-05 for ductile iron. Grates shall be provided painted black.

INSTALLATION
The specified PVC surface drainage inlet shall be installed using conventional flexible pipe backfill materials and procedures. The backfill material shall be crushed stone or other granular material meeting the requirements of class 2 material as defined in ASTM D2321. Bedding and backfill for surface drainage inlets shall be placed and compacted uniformly in accordance with ASTM D2321. The drain basin body will be cut at the time of the final grade. No brick, stone or concrete block will be required to set the grate to the final grade height. For H-20 load rated installations, a concrete ring will be poured under and around the grate and frame. The concrete slab must be designed taking into consideration local soil conditions, traffic loading, and other applicable design factors. For other installation considerations such as migration of fines, ground water, and soft foundations refer to ASTM D2321 guidelines.

NOTES:
1. ALL BLOCKING SHALL BE AGAINST UNDISTURBED HAND DUG SOIL.
2. WHERE SOIL CONDITIONS MAKE IT NECESSARY TO POUR CONCRETE BLOCKING OVER JOINTS. THE ENDS OF THE ADJACENT PIPES MUST HAVE A BRACE BLOCK TO RESIST MOVEMENT OF THESE JOINTS.
3. PLUGS SHALL BE COVERED WITH PAPER WHEN BLOCKING TO PREVENT BONDING OF CONCRETE.
4. WHERE SHEAR IS HIGH PROPER REINFORCING MUST BE INSTALLED INTO THE BLOCKING AS DIRECTED BY ENGINEER.
5. COVER SHALL BE A MINIMUM OF 3' BELOW NATURAL GRADE.
6. CLEARANCE FROM OIL & GAS COMPANIES LINES SHALL BE A MINIMUM OF 18".
7. THRUST BLOCKING DIMENSIONS SHALL BE 150% OF THE THRUST CALCULATED FROM THE FORMULA (THRUST=2 AP SINθ WHERE A=PIPE END AREA, P=PRESSURE PRODUCED BY PUMPING LIQUID, & θ=ANGLE OF BEND TO BE BLOCKED) AND SOIL BEARING CAPACITY OF 1500 PSF.
8. ALL CONCRETE SHALL BE 3000 PSI AT 28 DAY STRENGTH.

NOTE: (1) CONTRACTOR SHALL OBTAIN A STREET CROSSING PERMIT FROM THE CITY OF JONESBORO PRIOR TO CUTTING STREET.
(2) EXCAVATED MATERIAL SHALL BE REMOVED AND DISPOSED OF BY THE CONTRACTOR
(3) THIS REPAIR DETAIL IS REQUIRED FOR ALL EXCAVATION WITHIN 5' OF PAVED EDGE AND ALL TRANSVERSE EXCAVATIONS TO EXTEND 3' BEYOND PAVED EDGE.

LEAVE FLOWABLE FILL:
2" BELOW ASPHALT SURFACE
6" BELOW CONCRETE SURFACE
6" BELOW GRAVEL SURFACE

NOTES:
1. COARSE AGGREGATE SHALL BE MECHANICALLY TAMPED WHEN USED.
2. PIPE IN TRENCH SHALL BE PLACED ON FIRM UNDISTURBED SOIL. ALL OVER EXCAVATION SHALL BE COMPACTED BACK TO GRADE W/ BEDDING MATERIAL.
3. PVC PIPE SHALL BE SDR-35 AND INSTALLED IN ACCORDANCE WITH UNI-BELL PVC PIPE ASSOCIATION'S RECOMMENDATIONS FOR CONSTRUCTION.

NOTES TYPICAL TO ALL MANHOLES
1. MANHOLE BASES TO BE 4000 PSI, 28 DAY STRENGTH, LIMESTONE MIX CONCRETE ON UNDISTURBED SUB-GRADE OR ON COMPACTED SELECT FILL MATERIAL AS AUTHORIZED.
2. MANHOLE SIDEWALL MATERIAL TO BE CONCRETE IN ACCORDANCE WITH PROPOSAL FORM REQUIREMENTS.
   a. 4' I.D. FOR SEWER SIZES 6" THRU 24"
   b. 5' I.D. FOR SEWER SIZES 24" THRU 30"
   c. 6' I.D. FOR SEWER SIZES 36" THRU 42"
3. SET MANHOLE TOPS AS FOLLOWS:
   a. IN STREETS, ROADS, HIGHWAYS, AND OTHER PAVED AREAS: FLUSH WITH FINISHED PAVING GRADE.
   b. UNDEVELOPED AREAS, SUCH AS FIELDS, WOODS, ETC..: 12" ABOVE GROUND.
   c. OTHER AREAS: 1" ABOVE GROUND.
4. MANHOLE FRAMES SHALL HAVE MIN. OPENING OF 22" DIA.

ASU ARKANSAS STATE UNIVERSITY

DONALD W. REYNOLDS CENTER FOR HEALTH SCIENCES
ARKANSAS STATE UNIVERSITY
JONESBORO, ARKANSAS

BRACKETT KRENNERICH architects

HKB HAYWOOD, KENWARD, BARE AND ASSOCIATES, INC.

CIVIL DETAILS
JOB NO. B021-0005

Commission Number 12406

C006

Date: January 25, 2008

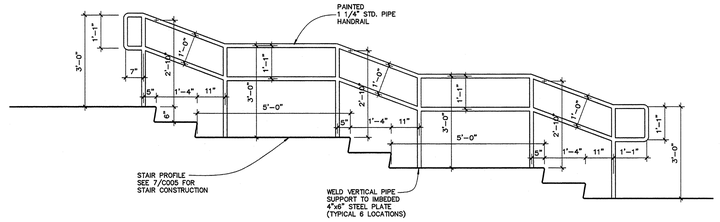

stair section (H)

SCALE: 1/2" = 1'-0"

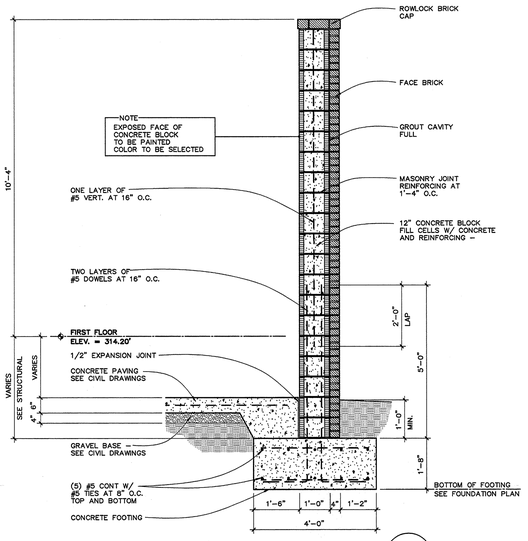

screen wall section (G)

SCALE: 1/2" = 1'-0"

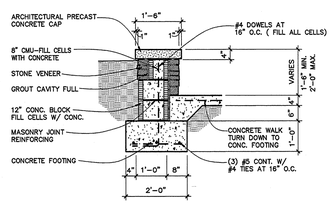

seat wall section (F)

SCALE: 1/2" = 1'-0"

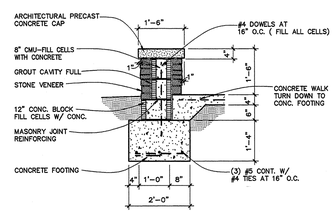

seat wall section (E)

SCALE: 1/2" = 1'-0"

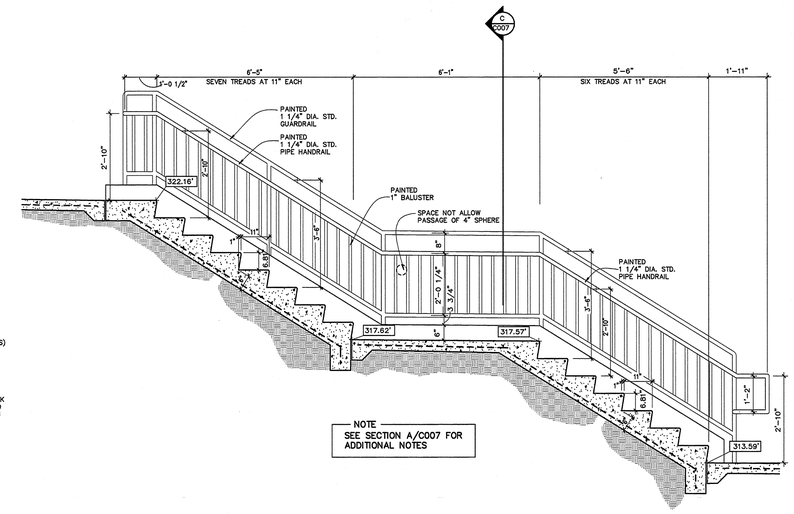

stair section (D)

SCALE: 1/2" = 1'-0"

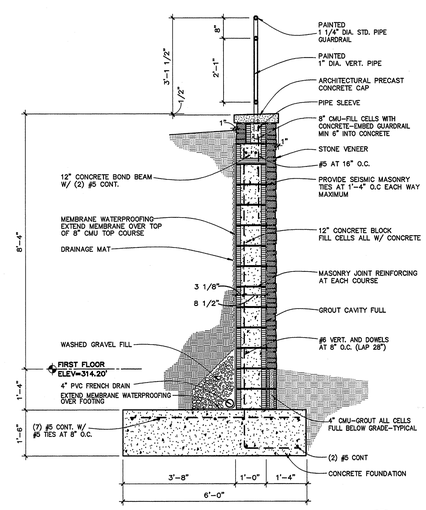

retaining wall section (C)

SCALE: 1/2" = 1'-0"

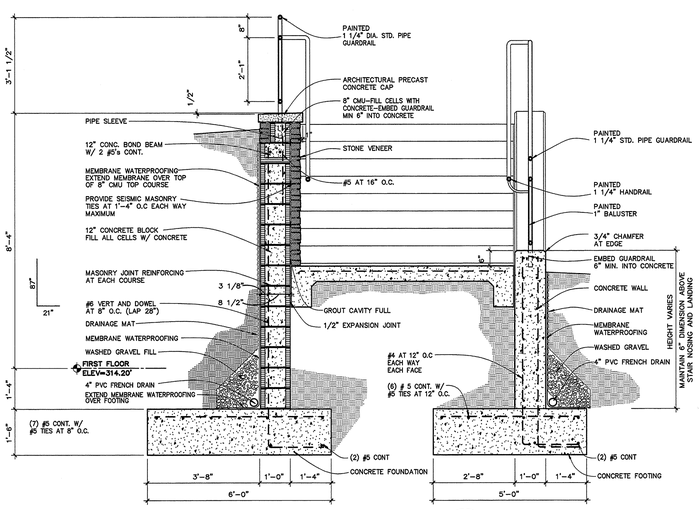

retaining wall section (B)

SCALE: 1/2" = 1'-0"

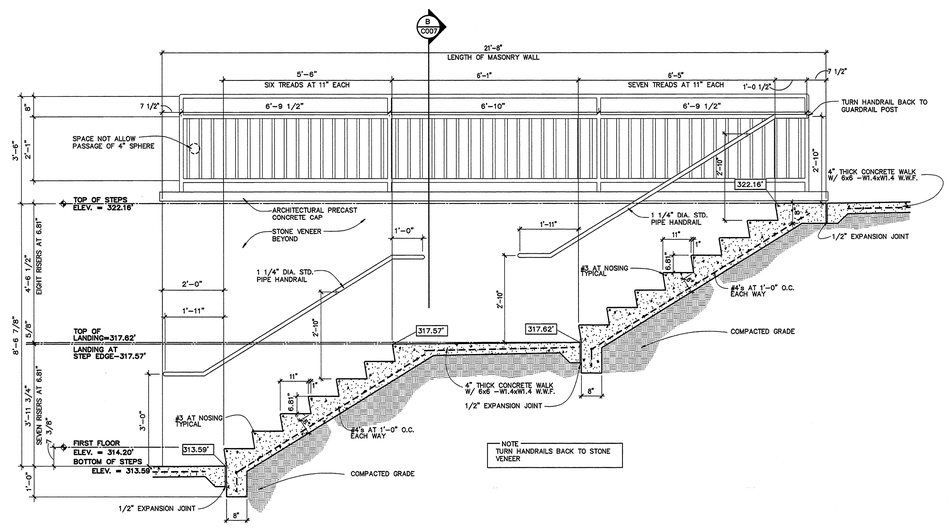

stair section (A)

SCALE: 1/2" = 1'-0"

ASU
ARKANSAS STATE UNIVERSITY

DONALD W. REYNOLDS CENTER FOR HEALTH SCIENCES

ARKANSAS STATE UNIVERSITY
JONESBORO, ARKANSAS

BRACKETT KRENNERICH architects
100 East Huntington, Suite D P.O. Box 1655 Jonesboro, Arkansas 72403-1655
870-932-4571 Fax 870-932-4975 www.bkarchits.com

Commission Number
12406
C007
Date: January 25, 2008

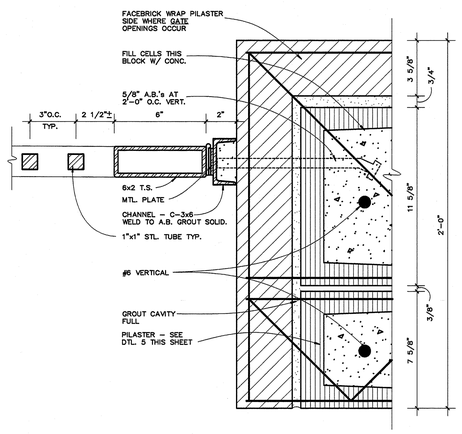

jamb at gate (1)

SCALE: 3" = 1'-0"

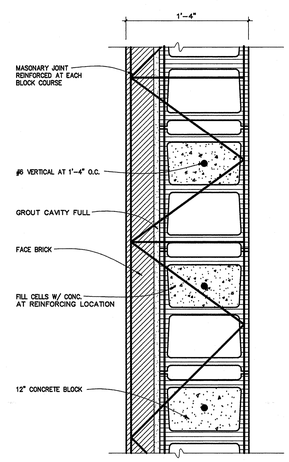

wall detail (2)

SCALE: 1 1/2" = 1'-0"

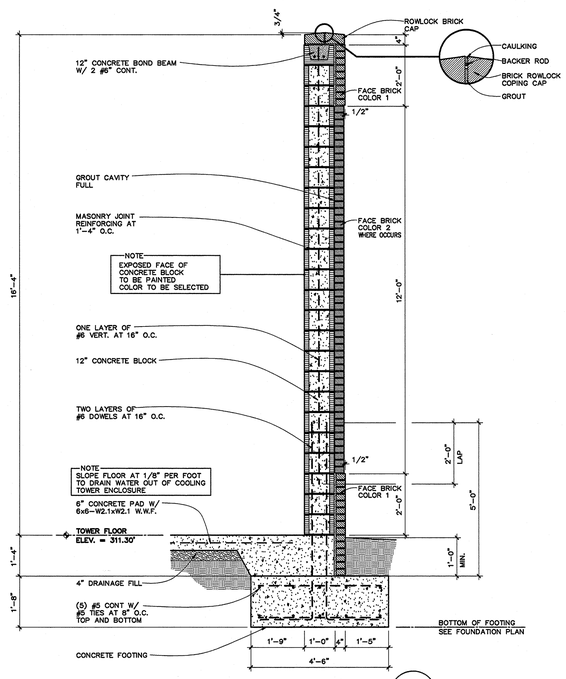

screen wall section (A)

SCALE: 1/2" = 1'-0"

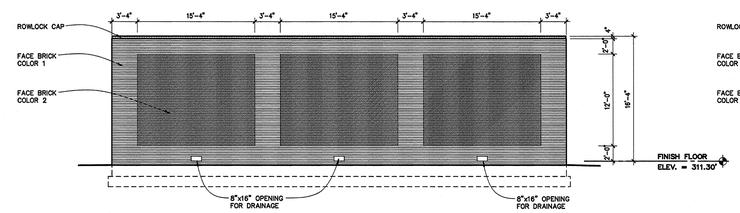

east elevation

SCALE: 1/8" = 1'-0"

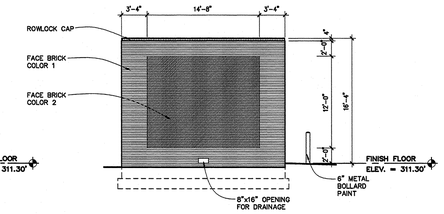

north elevation

SCALE: 1/8" = 1'-0"

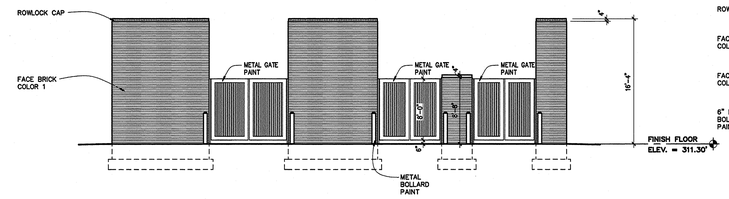

west elevation

SCALE: 1/8" = 1'-0"

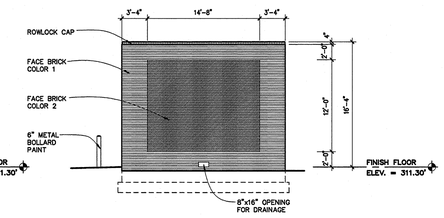

south elevation

SCALE: 1/8" = 1'-0"

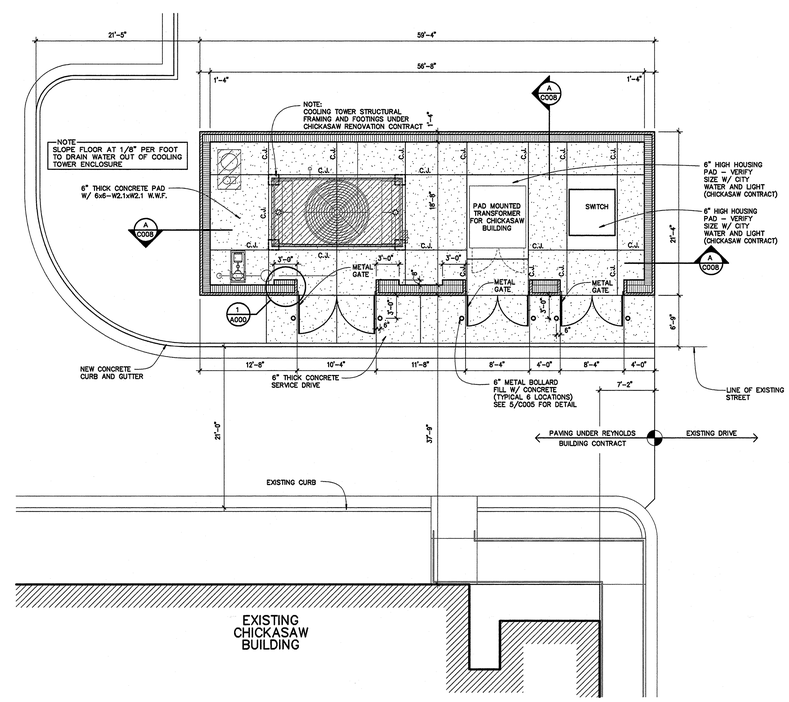

n cooling tower plan

SCALE: 1/8" = 1'-0"

ASU ARKANSAS STATE UNIVERSITY

DONALD W. REYNOLDS CENTER FOR HEALTH SCIENCES

ARKANSAS STATE UNIVERSITY
JONESBORO, ARKANSAS

BRACKETT KRENNERICH architects
100 East Huntington, Suite D P.O. Box 16555 Jonesboro, Arkansas 72403-1655
870-932-0571 Fax 870-932-0975 www.bkarchs.com

Commission Number 12406
C008
Date: January 25, 2008

S:\Projects\Current\ASU Renovate Center for Health Sciences\Working Drawings\C008.dwg Layout: January 23, 2008 Steve

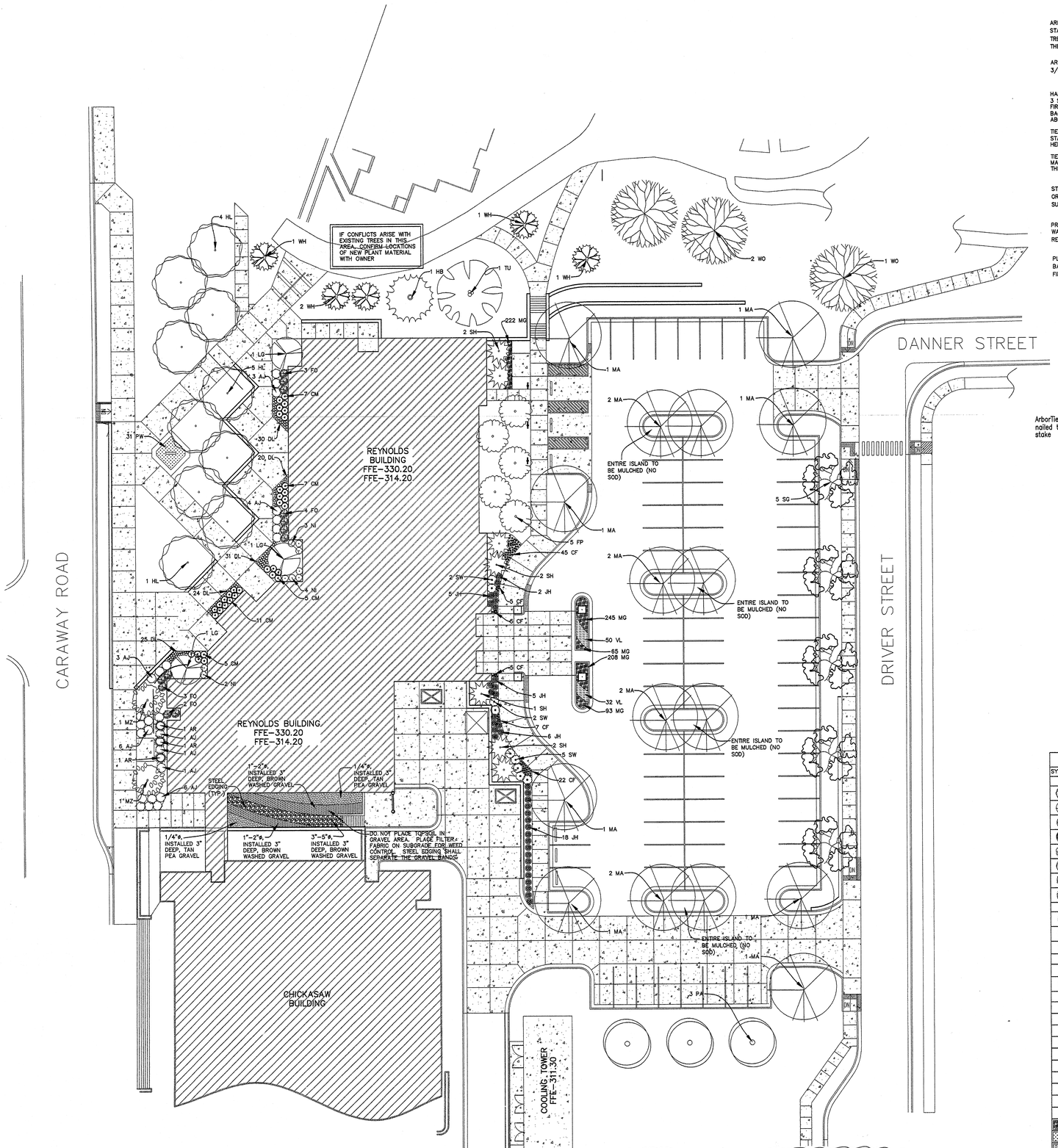

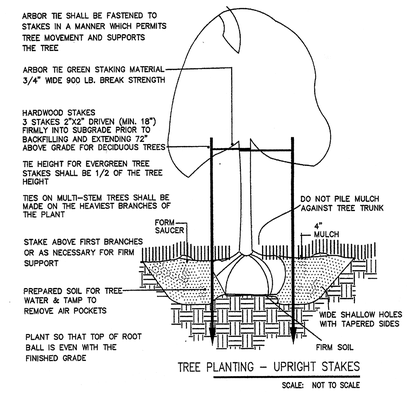

TREE PLANTING – UPRIGHT STAKES

SCALE: NOT TO SCALE

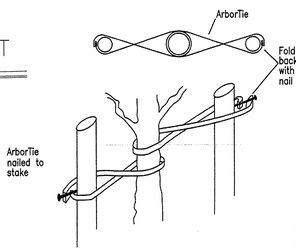

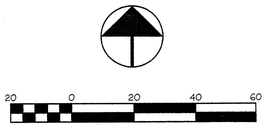

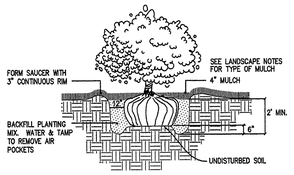

SHRUB PLANTING

SCALE: NOT TO SCALE

LANDSCAPE NOTES:

1. CONTRACTOR SHALL CONFIRM THE LOCATION OF ALL UTILITIES PRIOR TO STARTING ANY WORK. THE CONTRACTOR IS RESPONSIBLE FOR CONTACTING THE ARKANSAS ONE-CALL SYSTEM AT 1(800)482-8998. ALL UTILITY LOCATIONS SHOWN ON THIS PLAN ARE APPROXIMATE AND ARE BASED ON SURVEY INFORMATION, SITE DEVELOPMENT PLANS, UTILITY RECORDS, ETC.
2. ALL PLANT MATERIAL SHALL BE NURSERY GROWN. THE SIZE AND GRADING SHALL MEET OR EXCEED THE LATEST EDITION OF AMERICAN STANDARDS FOR NURSERY STOCK PUBLISHED BY THE AMERICAN NURSERY AND LANDSCAPE ASSOCIATION.
3. ALL ENTRANCE/EXIT PLANTINGS SHALL BE INSTALLED AND MAINTAINED TO PROVIDE CLEAR SIGHT DISTANCE FROM THE STREET ENTRANCE/EXIT LOCATIONS.
4. THE LANDSCAPE CONTRACTOR SHALL WARRANTY PLANT MATERIAL FOR ONE YEAR. DEAD OR DYING PLANT MATERIAL SHALL BE REMOVED AND REPLACED IMMEDIATELY OR BY THE NEXT GROWING SEASON.
5. NO CHANGES TO THE PLANT SCHEDULE ARE ALLOWED WITHOUT APPROVAL OF THE OWNER AND LANDSCAPE ARCHITECT. SUBSTITUTED PLANTS SHALL MEET THE SAME CRITERIA REGARDING TYPE, SIZE AND FUNCTION AS THOSE PLANTS SHOWN ON THE PLAN.
6. ALL LAWN AREAS ARE TO RECEIVE 6" OF TOPSOIL (6" IS THE MINIMUM COMPACTED DEPTH). ALL SHRUB BEDS ARE TO RECEIVE 12" OF TOPSOIL. (12" IS THE MINIMUM COMPACTED DEPTH). SOIL SHALL BE AMENDED TO ENHANCE FAVORABLE GROWING CONDITIONS. ALL EXISTING SOD/WEEDS SHALL BE REMOVED FROM PLANTING BED AREAS.
7. ALL PLANT BEDS SHALL BE DEFINED WITH STEEL EDGING, TREATED WITH A WEED BARRIER AND RECEIVE A MINIMUM OF 4" SHREDDED HARDWOOD BARK MULCH. GROUNDCOVER AREAS SHALL NOT RECEIVE A WEED BARRIER AND SHALL RECEIVE 2" OF SHREDDED HARDWOOD MULCH UNLESS OTHERWISE NOTED ON THIS PLAN. TREES SHALL RECEIVE A SHREDDED HARDWOOD BARK MULCH SAUCER PER DETAIL.
8. ALL TREES AND SHRUBS SHALL BE INSTALLED IN ACCORDANCE WITH THE DETAILS PROVIDED.
9. ALL TREES AND SHRUBS SHALL BE TREATED WITH 14-14-14 TIME RELEASE FERTILIZER UPON COMPLETION OF THEIR INSTALLATION.
10. ALL DISTURBED AREAS NOT TO RECEIVE PLANTINGS OR OTHERWISE LABELED FOR MULCHING SHALL BE SODDED WITH TIFWAY 419 BERMUDA GRASS.
11. ANY DISTURBED AREAS WHERE EXPOSED SOILS ARE NOT TO BE FINE GRADED FOR PERIODS OF 20 DAYS OR MORE SHALL BE SEEDED TEMPORARILY WITH ANNUAL RYE GRASS AT 8 LBS. PER 1,000 SF AND COVERED WITH A CONTINUOUS MULCH OF STRAW.
12. A LANDSCAPE SPRINKLER SYSTEM IS PROPOSED. LANDSCAPE CONTRACTOR TO CONFIRM LOCATION OF PROPOSED IRRIGATION LINES WITH THE IRRIGATION CONTRACTOR PRIOR TO PLANT MATERIAL INSTALLATION.
13. THE QUANTITIES LISTED IN THE PLANT SCHEDULE ARE FOR CONVENIENCE ONLY. CONTRACTOR TO INSTALL PLANT MATERIALS AS GRAPHICALLY DEPICTED ON THE PLAN.

PLANT SCHEDULE

SYMBOL/KEY		COMMON NAME	BOTANICAL NAME	QUANTITY	SIZE	SPACING	REMARKS
TREES							
	HL	SHADEMASTER HONEYLOCUST	Gleditsia triancanthos inermis 'Shademaster'	10	2-1/2" CAL.	20' O.C.	
	MA	SEEDLESS GREEN ASH	Fraxinus pennsylvanica 'Marshall'	16	2-1/2" CAL.	18' O.C.	
	SG	CHEROKEE SWEETGUM	Liquidambar styraciflua 'Ward'	5	2-1/2" CAL.	ALIGN WITH PARKING STRIPING AS SHOWN ON PLAN	
	WO	WHITE OAK	Quercus alba	3	2-1/2" CAL.	AS SHOWN	
	TU	TULIP TREE	Liriodendron tulipifera	1	2-1/2" CAL.	AS SHOWN	
	PA	PERSIAN PARROTIA	Parrotia persica	3	2-1/2" CAL.	28' O.C.	
	MZ	MUSASHINO COLUMMAR ZELKOVA	Zelkova serrata 'Musashino'	2	2-1/2" CAL.	35' O.C.	
	HB	UPRIGHT EUROPEAN HORNBEAM	Carpinus betulus 'Fastigiata'	1	2-1/2" CAL.	AS SHOWN	
ORNAMENTAL TREES							
	WH	COMMON WITCHHAZEL	Hamamelis virginiana	5	5' TALL MIN.	AS SHOWN	
	FP	FOREST PANSY REDBUD	Cercis canadensis 'Forest Pansy'	5	6' TALL MIN.	15' O.C.	
	LG	LITTLE GEM MAGNOLIA	Magnolia grandiflora 'Little Gem'	3	6' TALL MIN.	AS SHOWN	
EVERGREEN TREES							
	SH	SAVANNAH HOLLY	Ilex X attenuata 'Savannah'	7	5' TALL MIN.	10' O.C.	TREE FORM
	AR	DARK GREEN ARBORVITAE	Thuja occidentalis 'Nigra'	3	5' TALL MIN.	7' O.C.	
SHRUBS							
	NI	NORDIC INKBERRY	Ilex glabra 'Chamzin'	9	5 GAL., 18" TALL MIN.	3' O.C.	
	SW	HENRY'S GARNET SWEETSPIRE	Itea virginica 'Henry's Garnet'	9	5 GAL., 18" TALL MIN.	4' O.C.	
	JH	COMPACT JAPANESE HOLLY	Ilex crenata 'Compacta'	36	5 GAL., 18" TALL MIN.	3' O.C.	
	AJ	COMPACT ANDORRA JUNIPER	Juniperus horizontalis 'Plumosa Compacta'	25	5 GAL., 15" TALL MIN.	4' O.C.	
	FO	MT. AIRY FOTHERGILLA	Fothergilla major 'Mt. Airy'	12	5 GAL., 24" TALL MIN.	4' O.C.	
	CM	LOW FLAME CRAPEMYRTLE	Lagerstroemia indica 'Low Flame'	35	5 GAL., 18" TALL MIN.	3' O.C.	
PERENNIALS							
*	CF	CHRISTMAS FERN	Polystichum acrostichoides	89	1 GAL.	1' O.C.	FULLY ROOTED
o	DL	DAYLILY	Hemerocallis 'Pardon Me'	130	1 GAL.	1' O.C.	FULLY ROOTED
GROUNDCOVER/ORNAMENTAL GRASSES							
	MG	MONDO GRASS	Ophiopogon japonicus	833	QUARTS	6" O.C.	FULLY ROOTED
	PW	PURPLELEAF WINTERCREEPER	Euonymus fortunei 'Coloratus'	31	1 GAL.	2' O.C.	FULLY ROOTED
	VL	VARIEGATED LIRIOPE	Liriope muscari 'Variegata'	82	1 GAL.	1' O.C.	FULLY ROOTED

4962-006-008

Type	Old Business	8.5.08 PROGRESS MEETING MINUTES	**Originated** 6/4/2008
Category	Schedule		**Due** 8/6/2008
Summary	Landscaping/Irrigation		**Resolved**
Desired Outcome			**Complete** ☐
Responsible Parties	All Team Members		

Discussion Details

Agenda - Discuss landscape/irrigation drawings.

Meeting Minutes:

- Hayden Cunningham requested direction on what to do with area where CDI's job trailer is setting. George Krennerich is to get direction from Terry Carty at the afternoon meeting.

- Per George Krennerich - the area south of the parking lot is to receive approximately 15' of sod. The area to the north of the parking lot and new building is to receive sod along the south of the existing

ARKANSAS STATE UNIVERSITY

DONALD W. REYNOLDS CENTER FOR HEALTH SCIENCES

ARKANSAS STATE UNIVERSITY

JONESBORO, ARKANSAS

BRACKETT KRENNERICH architects
100 East Huntington, Suite D P.O. Box 1656 Jonesboro, Arkansas 72403-1656
870-932-0571 Fax 870-932-0875 www.bkarchs.com

EB LandWorks, Inc.
LANDSCAPE ARCHITECTURE
CIVIL ENGINEERING
P.O. BOX 3432
Fayetteville, Arkansas 72702
Voice 479.444.7769
Fax 479.444.7793

PLANTING PLAN

Commission Number 12406

L001

Date: JULY 7, 2008

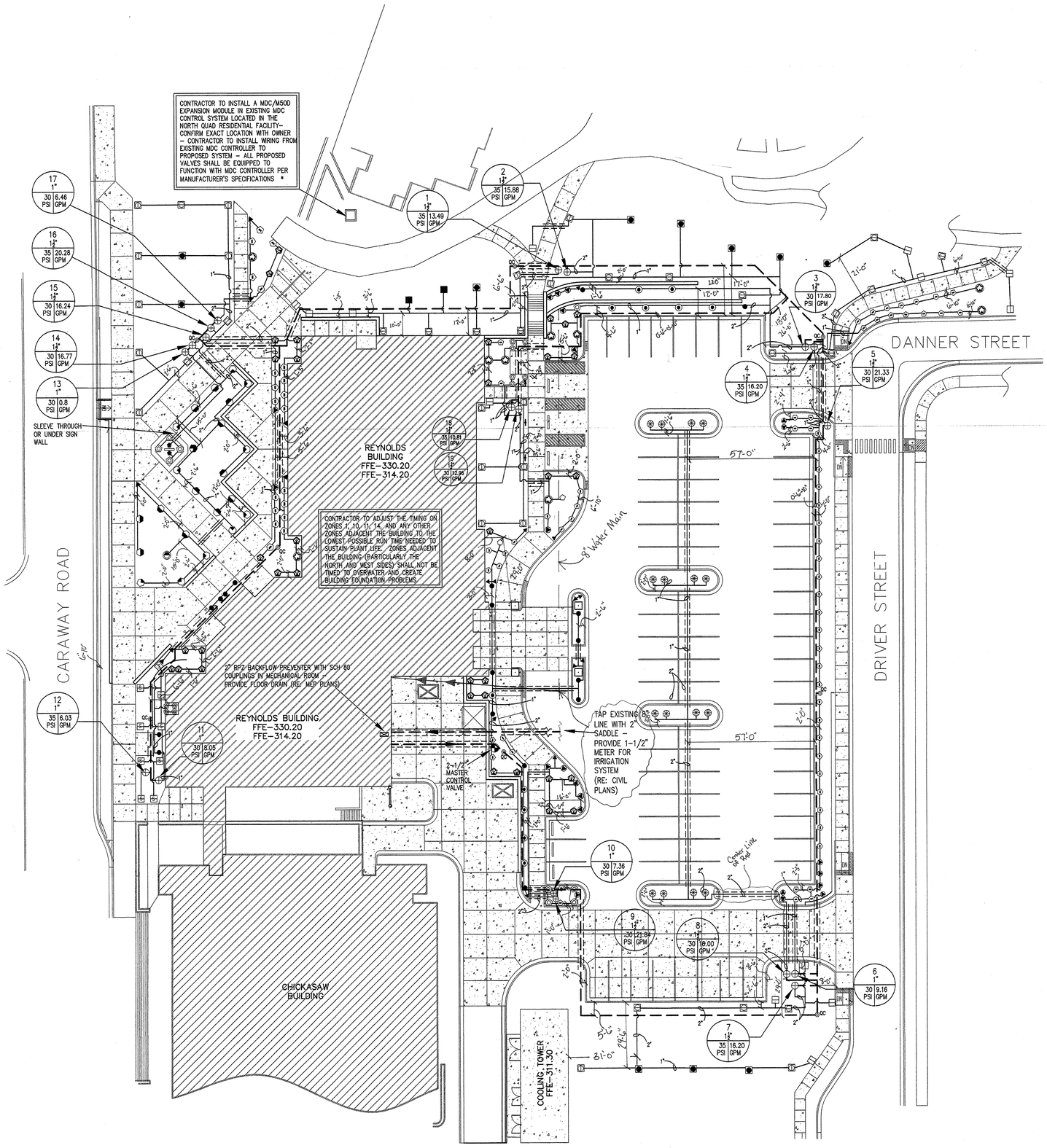

20 0 20 40 60

Scale 1" = 20'

CALL BEFORE YOU DIG 1-800-482-8998 ARKANSAS ONE CALL SYSTEM

IRRIGATION SYMBOLS

RAINBIRD 1800 SERIES SPRAY HEADS 1804-SAM-PRS-5Q	30 PSI	0.10 GPM	5'R
RAINBIRD 1800 SERIES SPRAY HEADS 1804/1806-SAM-PRS-5H	30 PSI	0.20 GPM	5'R
RAINBIRD 1800 SERIES SPRAY HEADS 1804/1806-SAM-PRS-8H	30 PSI	0.52 GPM	8'R
RAINBIRD 1800 SERIES SPRAY HEADS 1804/1806-SAM-PRS-8F	30 PSI	1.05 GPM	8'R
RAINBIRD 1800 SERIES SPRAY HEADS 1804/1806-SAM-PRS-12Q	30 PSI	0.65 GPM	12'R
RAINBIRD 1800 SERIES SPRAY HEADS 1804/1806-SAM-PRS-12H	30 PSI	1.30 GPM	12'R
RAINBIRD 1800 SERIES SPRAY HEADS 1804/1806-SAM-PRS-6VAN	30 PSI	0.37 GPM	6'R/90°
RAINBIRD 1800 SERIES SPRAY HEADS 1804/1806-SAM-PRS-6VAN	30 PSI	0.60 GPM	6'R/180°
RAINBIRD 1800 SERIES SPRAY HEADS 1804/1806-SAM-PRS-15EST	30 PSI	0.61 GPM	4'x15'
RAINBIRD 1800 SERIES SPRAY HEADS 1804/1806-SAM-PRS-15CST	30 PSI	1.21 GPM	4'x30'
RAINBIRD 1800 SERIES SPRAY HEADS 1804/1806-SAM-PRS-R13-18Q	30 PSI	0.40 GPM	16'R
RAINBIRD 1800 SERIES SPRAY HEADS 1804/1806-SAM-PRS-R13-18H	30 PSI	0.80 GPM	16'R
RAINBIRD 1800 SERIES SPRAY HEADS 1804-SAM-PRS-R13-18TQ	30 PSI	1.20 GPM	16'R
RAINBIRD 1800 SERIES SPRAY HEADS 1804-SAM-PRS-R13-18F	30 PSI	1.60 GPM	16'R
RAINBIRD 3500 SERIES ROTORS 3500-S-PC-SAM-0.75	35 PSI	0.67 GPM	17'R
RAINBIRD 3500 SERIES ROTORS 3504-PC-SAM-0.75	35 PSI	0.67 GPM	17'R
RAINBIRD 3500 SERIES ROTORS 3504-FC-SAM-0.75	35 PSI	0.67 GPM	17'R
RAINBIRD 3500 SERIES ROTORS 3504-PC-SAM-2.0	35 PSI	1.69 GPM	27'R
RAINBIRD 3500 SERIES ROTORS 3504-FC-SAM-2.0	35 PSI	1.69 GPM	27'R
RAINBIRD 1400 SERIES BUBBLERS 1404 ON 1804 POP-UP	30 PSI	1.00 GPM	

QC QUICK COUPLER RAINBIRD 44 LRC 1" LOCKING COVER, 2-PIECE BODY (LOCATED EVERY 150' OR LESS ALONG MAIN LINE)

MDC/M50D EXPANSION MODULE TO BE INSTALLED IN NORTH QUAD EXISTING MDC CONTROL SYSTEM (SEE PLAN & VERIFY LOCATION WITH OWNER)

BACKFLOW PREVENTER - SEE PLAN FOR TYPE, SIZE AND LOCATION - PROVIDE BRAND IN ACCORDANCE WITH ASU AND CITY WATER & LIGHT CRITERIA

VALVE ID BOX*

MASTER CONTROL VALVE - 2-1/2" RAINBIRD PEB-PRS WITH MDC SENSOR DECODER

ZONE VALVE - RAINBIRD PEB (SEE VALVE ID BOXES ON PLAN FOR SIZES) WITH MDC SENSOR DECODER

MAIN LINE (2-1/2" SCHEDULE 40 PVC)

LATERAL PIPE (3/4", 1" OR 2" SCHEDULE 40 PVC, SEE PLAN AND IRRIGATION NOTES FOR SPECIFIC SIZES)

SLEEVE (SCHEDULE 40 PVC, DIAMETER SHALL BE TWO TIMES LARGER THAN PIPE INSTALLED IN SLEEVE) - CONTRACTOR TO STAMP "S" IN CONCRETE WALKS ADJACENT TO SLEEVE CROSSINGS, BOTH SIDES

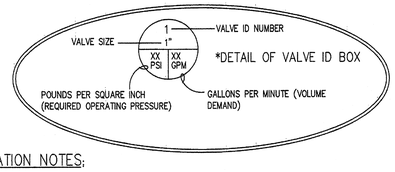

IRRIGATION NOTES:

1. THE LANDSCAPE IRRIGATION CONTRACTOR IS TO VERIFY LOCATION OF WATER METER TO SERVE IRRIGATION SYSTEM. A RPZ BACKFLOW PREVENTER MUST BE INSTALLED DOWNSTREAM OF THE METER SERVING THE IRRIGATION SYSTEM IN ACCORDANCE WITH ASU AND JONESBORO CITY WATER & LIGHT UTILITIES' REQUIREMENTS. ALL PERMIT/CONNECTION/METERING FEES AND EQUIPMENT/TESTING COSTS ARE TO BE INCLUDED IN THE LANDSCAPE IRRIGATION CONTRACTOR'S QUOTE FOR THE IRRIGATION SYSTEM INSTALLATION.
2. BACKFLOW PREVENTER SHALL BE TESTED AND RESULTS SHALL BE FORWARDED TO ASU AND JONESBORO WATER UTILITIES WITHIN 10 DAYS OF THE TEST. LANDSCAPE IRRIGATION CONTRACTOR SHOULD CONSULT WITH ASU AND JONESBORO WATER UTILITIES PRIOR TO COMMENCING CONSTRUCTION OF IRRIGATION SYSTEM.
3. THE STATIC PRESSURE AT THIS PROPERTY IS APPROXIMATELY 75 PSI BASED ON WATER UTILITY DATA. IF THE LANDSCAPE IRRIGATION CONTRACTOR VERIFIES A SITE PRESSURE BELOW 75 PSI, CONTRACTOR SHALL NOTIFY THE OWNER / LANDSCAPE ARCHITECT IMMEDIATELY.
4. LANDSCAPE IRRIGATION CONTRACTOR SHALL INSTALL ALL REMOTE CONTROL VALVES IN A VALVE BOX (ONE VALVE PER BOX). VALVES ARE TO BE INSTALLED 16"-24" BELOW FINISHED GRADE. ALL VALVES ARE TO BE IN A 16"X24" BOX. VALVE BOXES ARE TO BE BLACK AND HAVE 6" OF PEA GRAVEL.
5. ALL LATERAL LINES SHALL BE SCHEDULE 40 PVC, AND SHALL BE 3/4" IN DIAMETER UNLESS OTHERWISE LABELED. NON-LABELED SEGMENTS BETWEEN LABELED SEGMENTS SHALL BE THE SAME SIZE AS THE LABELED SEGMENTS. ALL MAIN LINES SHALL BE 2-1/2" SCHEDULE 40 PVC. ALL SLEEVES SHALL BE SCHEDULE 40 PVC AND TWICE THE SIZE OF THE LINE RUNNING THROUGH IT.
6. TO PROVIDE A COMPLETE IRRIGATION SYSTEM, THE LANDSCAPE IRRIGATION CONTRACTOR SHALL FURNISH ALL LABOR, MATERIALS, AND OTHER SERVICES REQUIRED TO PROVIDE A SELF-DRAINING, FULLY OPERATIONAL AUTOMATIC IRRIGATION SYSTEM.
7. THE IRRIGATION DESIGN SHOWN IS COMPLETE BASED ON THE PROPERTIES OF THE MANUFACTURER AND PRODUCT DESIGNATIONS REPRESENTED IN THE IRRIGATION LEGEND. THE MODEL NUMBERS SHOWN ARE BASED ON A RAINBIRD BRAND SYSTEM. EQUAL SYSTEMS BY OTHER MANUFACTURER'S ARE ACCEPTABLE, PROVIDED THE LANDSCAPE IRRIGATION CONTRACTOR SUBMITS A COMPLETE SYSTEM DESIGN TO THE LANDSCAPE ARCHITECT FOR REVIEW AND APPROVAL.
8. THE LANDSCAPE IRRIGATION CONTRACTOR SHALL BE FAMILIAR WITH THE MANUFACTURER'S SPECIFICATIONS AND MATERIALS PRIOR TO CONSTRUCTION. ALL SYSTEM COMPONENTS REPRESENTED IN THIS DESIGN MUST BE INSTALLED WITH STRICT ADHERENCE TO THE MANUFACTURER'S SPECIFICATIONS AND DETAILS.
9. AFTER INSTALLATION OF SYSTEM HEADS, THE LANDSCAPE IRRIGATION CONTRACTOR SHALL ADJUST THE ARC AND RADIUS OF ALL HEADS SO THAT OVERSPRAY ON PAVEMENT IS MINIMIZED AND ALL PLANT MATERIAL IS PROVIDED MAXIMUM COVERAGE.
10. THE LANDSCAPE IRRIGATION CONTRACTOR SHALL VERIFY LOCATION OF ALL UTILITIES PRIOR TO INSTALLATION OF IRRIGATION SYSTEM. THE LANDSCAPE IRRIGATION CONTRACTOR SHALL NOT DISTURB UTILITY LINES AND/OR COMPONENTS DURING IRRIGATION INSTALLATION.
11. IRRIGATION LINES ARE SHOWN SCHEMATICALLY ONLY. THE LANDSCAPE IRRIGATION CONTRACTOR SHALL INSTALL LATERAL AND MAIN LINES IN LANDSCAPE AREAS AND OUT OF UTILITIES AND PAVED AREAS EXCEPT WHERE NOTED WITH SLEEVES. MAIN LINES SHALL BE INSTALLED IN LATERAL LINE TRENCHES WHENEVER POSSIBLE. CONTROL WIRE SHALL BE LOCATED ON TOP OF IRRIGATION LINE.
12. THE LANDSCAPE IRRIGATION CONTRACTOR SHALL REVIEW AND VERIFY IRRIGATION DESIGN. IF ANY PORTION OF THE DESIGN SHOWN IS NOT ACHIEVABLE, THE CONTRACTOR SHALL NOTIFY THE LANDSCAPE ARCHITECT IMMEDIATELY.
13. THE LANDSCAPE IRRIGATION CONTRACTOR SHALL COORDINATE BACKFLOW PREVENTER, AND CONTROLLER EXPANSION MODULE LOCATION WITH THE GENERAL CONTRACTOR AND OWNER.
14. THE LANDSCAPE IRRIGATION CONTRACTOR SHALL COORDINATE IRRIGATION SYSTEM CONSTRUCTION WITH THE GENERAL CONTRACTOR AND LANDSCAPE CONTRACTOR PRIOR TO BEGINNING CONSTRUCTION.
15. ALL SPRINKLER HEADS ARE TO BE INSTALLED 12" OFF SIDEWALKS AND 6" OFF ALL HARD SURFACES. ALL VALVE BOXES ARE TO BE INSTALLED 24" FROM ALL SIDEWALKS AND HARD SURFACES.
16. A MINIMUM OF 12" BETWEEN GLUE JOINTS IS ALLOWED.
17. PROVIDE 4" POP-UPS IN SODDED AREAS AND 6" POP-UPS IN SHRUB BED AREAS, REFERENCE THE IRRIGATION LEGEND FOR APPLICABLE TYPES.

ASU ARKANSAS STATE UNIVERSITY

DONALD W. REYNOLDS CENTER FOR HEALTH SCIENCES

ARKANSAS STATE UNIVERSITY
JONESBORO, ARKANSAS

BRACKETT KRENNERICH architects
100 East Huntington, Suite D P.O. Box 1655 Jonesboro, Arkansas 72403-1655
870.932.0571 Fax 870.932.0976 www.bkarchs.com

EB LandWorks, Inc.
LANDSCAPE ARCHITECTURE
CIVIL ENGINEERING
P.O. BOX 3432
Fayetteville, Arkansas 72702
Voice 479.444.7769
Fax 479.444.7793

IRRIGATION PLAN

Commission Number 12406

L002

Date: JULY 7, 2008

REGISTERED LANDSCAPE ARCHITECT MELISSA EVANS 191 STATE OF ARKANSAS
7-7-08

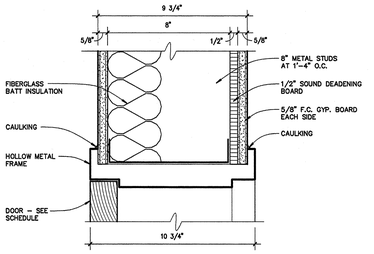

head detail (11)
SCALE: 3" = 1'-0"

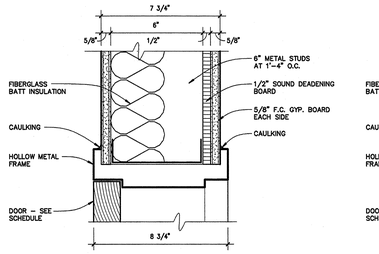

head detail (7)
SCALE: 3" = 1'-0"

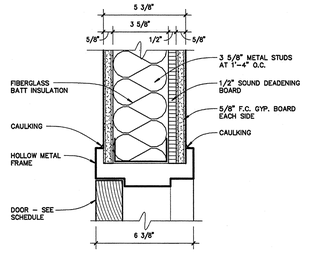

head detail (3)
SCALE: 3" = 1'-0"

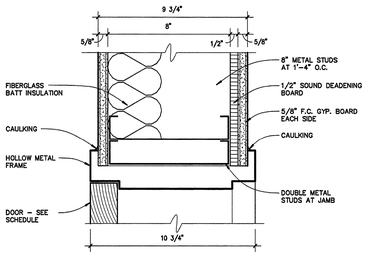

jamb detail (12)
SCALE: 3" = 1'-0"

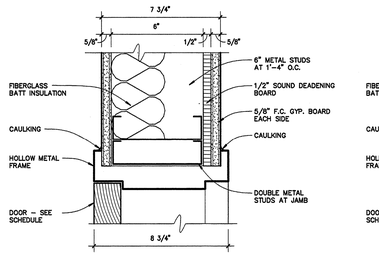

jamb detail (8)
SCALE: 3" = 1'-0"

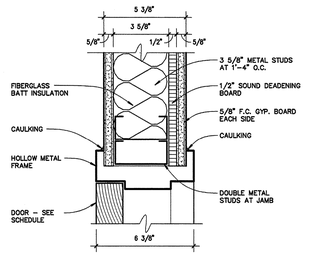

jamb detail (4)
SCALE: 3" = 1'-0"

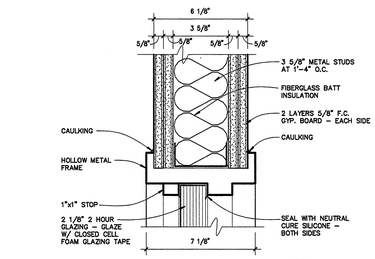

head detail (13)
(SILL SIMILAR)
SCALE: 3" = 1'-0"

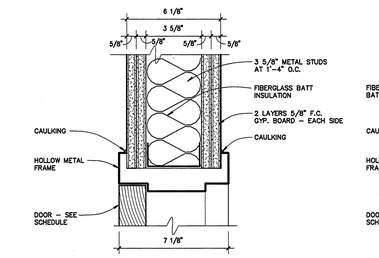

head detail (9)
SCALE: 3" = 1'-0"

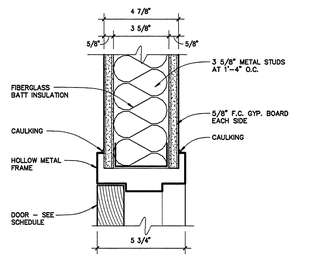

head detail (5)
SCALE: 3" = 1'-0"

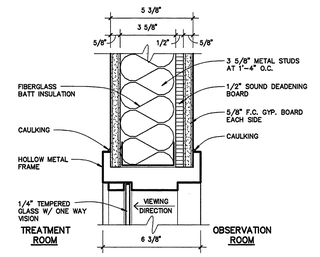

head detail (1)
(SILL SIMILAR)
SCALE: 3" = 1'-0"

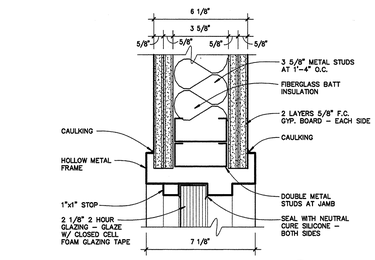

jamb detail (14)
SCALE: 3" = 1'-0"

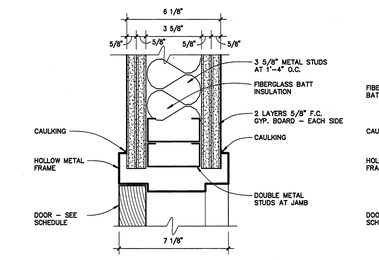

jamb detail (10)
SCALE: 3" = 1'-0"

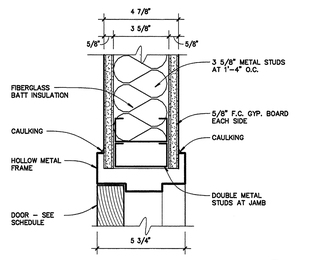

jamb detail (6)
SCALE: 3" = 1'-0"

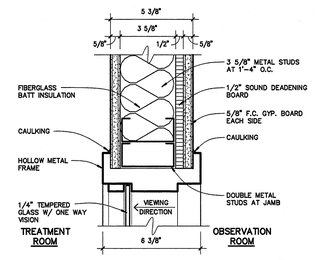

jamb detail (2)
SCALE: 3" = 1'-0"

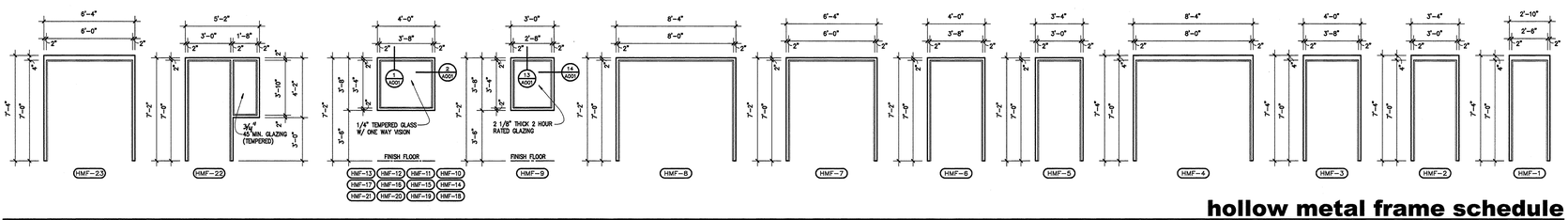

hollow metal frame schedule
SCALE: 1/4" = 1'-0"

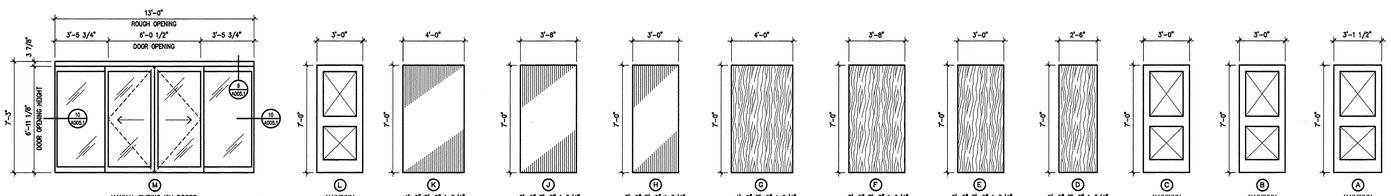

visual door types
SCALE: 1/4" = 1'-0"

DOOR SCHEDULE – THIRD FLOOR

OPNG NMBR.	DOOR TYPE	DOOR STYLE	DOOR THRESH	DOOR FRAME	DETAILS FRAME DEPTH	DETAILS HEAD	DETAILS JAMB	DETAILS SILL	LBL	HDWE SET	REMARKS
139	E	SINGLE	—	HMF-5	11 1/4"	10/A002	10/A002	—	1 HOUR	101	
140	E	PAIR	—	HMF-7	6 3/8"	3/A001	4/A001	—	—	125	
141	F	SINGLE	—	HMF-6	6 3/8"	3/A001	4/A001	—	—	106A	
142	E	PAIR	—	HMF-7	6 3/8"	3/A001	4/A001	—	—	125	
143	E	SINGLE	—	AF-25	4 1/2"	—	—	—	—	112	
144	E	SINGLE	—	HMF-5	6 3/8"	3/A001	4/A001	—	45 MIN.	107	
145	E	PAIR	—	HMF-23	8 3/4"	13/A002	17/A002	—	45 MIN.	102	
146	E	SINGLE	—	HMF-5	6 3/8"	3/A001	4/A001	—	—	112	
147	E	SINGLE	—	HMF-5	6 3/8"	3/A001	4/A001	—	—	112	
148	E	SINGLE	—	HMF-5	6 3/8"	3/A001	4/A001	—	—	112	
149	E	SINGLE	—	HMF-5	6 3/8"	3/A001	4/A001	—	45 MIN.	107	
150	E	SINGLE	—	HMF-5	6 3/8"	3/A001	4/A001	—	—	120	
151	F	SINGLE	—	HMF-6	6 3/8"	3/A001	4/A001	—	—	122B	
152	E	SINGLE	—	HMF-5	6 3/8"	3/A001	4/A001	—	—	120	
153	E	SINGLE	—	HMF-5	6 3/8"	3/A001	4/A001	—	—	121	
154	E	PAIR	—	HMF-23	8 3/4"	13/A002	17/A002	—	45 MIN.	102	
155	E	SINGLE	—	HMF-2	8 3/4"	13/A002	14/A002	—	—	117	
156	D	SINGLE	—	HMF-1	8 3/4"	13/A002	14/A002	—	—	123	
157	E	SINGLE	—	HMF-2	8 3/4"	13/A002	14/A002	—	—	117	
158	E	PAIR	—	HMF-23	8 3/4"	13/A002	17/A002	—	45 MIN.	102	
159	E	SINGLE	—	HMF-5	6 3/8"	3/A001	4/A001	—	—	106	
160	E	SINGLE	—	HMF-5	6 3/8"	3/A001	4/A001	—	—	120	
161	E	SINGLE	—	HMF-5	6 3/8"	3/A001	4/A001	—	45 MIN.	113	
162	F	SINGLE	—	HMF-6	6 3/8"	3/A001	4/A001	—	45 MIN.	105	
163	E	SINGLE	—	HMF-5	6 3/8"	3/A001	4/A001	—	—	120	
164	E	SINGLE	—	HMF-5	6 3/8"	3/A001	4/A001	—	—	106	
165	E	SINGLE	—	HMF-5	6 3/8"	3/A001	4/A001	—	—	122	
166	E	PAIR	—	HMF-7	6 3/8"	3/A001	4/A001	—	45 MIN.	108	
167	F	SINGLE	—	HMF-6	6 3/8"	3/A001	4/A001	—	—	106A	
168	E	SINGLE	—	HMF-5	6 3/8"	3/A001	4/A001	—	—	120	
169	E	SINGLE	—	HMF-5	6 3/8"	3/A001	4/A001	—	—	120	
170	E	SINGLE	—	HMF-5	6 3/8"	3/A001	4/A001	—	—	121	
171	F	SINGLE	—	HMF-6	6 3/8"	3/A001	4/A001	—	—	106A	
172	E	SINGLE	—	HMF-5	6 3/8"	3/A001	4/A001	—	—	106	
173	E	SINGLE	—	HMF-2	13 3/4"	8/A002	9/A002	—	1 HOUR	101	
174	E	SINGLE	—	HMF-5	6 3/8"	3/A001	4/A001	—	45 MIN.	107	
175	M	4 PANEL	—	—	4 1/2"	9/A005.1	10/A005.1	—	—	116	
176	M	4 PANEL	—	—	4 1/2"	9/A005.1	10/A005.1	—	—	116	
177	E	SINGLE	—	HMF-5	8 3/4"	7/A001	8/A001	—	—	124	
178	E	SINGLE	—	HMF-5	6 3/8"	3/A001	4/A001	—	—	122A	
179	E	SINGLE	—	HMF-5	8 3/4"	7/A001	8/A001	—	—	124	

DOOR SCHEDULE – FIRST FLOOR

OPNG NMBR.	DOOR TYPE	DOOR STYLE	DOOR THRESH	DOOR FRAME	DETAILS FRAME DEPTH	DETAILS HEAD	DETAILS JAMB	DETAILS SILL	LBL	HDWE SET	REMARKS
1	A	PAIR	ALUM.	CW-2	7 1/2"	—	3/A005 SIM.	5/A005	—	8	
2	C	PAIR	—	AF-1	4 1/2"	—	—	—	—	9	
3	C	PAIR	—	AF-3	4 1/2"	—	—	—	—	104	
4	E	SINGLE	—	HMF-2	8 3/4"	11/A002	12/A002	—	45 MIN.	127	
5	E	SINGLE	—	HMF-5	5 3/4"	5/A001	6/A001	—	—	120	
6	E	SINGLE	—	HMF-5	8 3/4"	7/A001	8/A001	—	—	109	
7	E	SINGLE	—	HMF-5	6 3/8"	3/A001	4/A001	—	—	109	
8	E	SINGLE	—	HMF-5	6 3/8"	3/A001	4/A001	—	45 MIN.	113	
9	E	SINGLE	—	HMF-5	7 1/8"	9/A001	10/A001	—	1 1/2 HOUR	114	
10	E	SINGLE	—	HMF-5	6 3/8"	3/A001	4/A001;18/A002	—	45 MIN.	126	
11	E	SINGLE	—	HMF-5	8 3/4"	7/A001	8/A001	—	—	110	
12	E	SINGLE	—	HMF-5	6 3/8"	3/A001	4/A001	—	—	112	
13	E	SINGLE	—	HMF-5	6 3/8"	3/A001	4/A001	—	—	110	
14	E	SINGLE	—	HMF-5	6 3/8"	3/A001	4/A001	—	—	110	
15	E	SINGLE	—	HMF-5	6 3/8"	3/A001	4/A001	—	—	111	
16	E	SINGLE	—	HMF-5	6 3/8"	3/A001	4/A001	—	—	111	
17	E	SINGLE	—	HMF-5	6 3/8"	3/A001	4/A001	—	—	111	
18	E	SINGLE	—	HMF-5	6 3/8"	3/A001	4/A001	—	—	111	
19	E	SINGLE	—	HMF-5	6 3/8"	3/A001	4/A001	—	—	110	
20	E	SINGLE	—	HMF-5	6 3/8"	3/A001	4/A001	—	—	110	
21	E	SINGLE	—	HMF-5	6 3/8"	3/A001	4/A001	—	—	110	
22	E	SINGLE	—	HMF-5	6 3/8"	3/A001	4/A001	—	—	111	
23	E	SINGLE	—	HMF-5	6 3/8"	3/A001	4/A001	—	—	111	
24	E	SINGLE	—	HMF-5	6 3/8"	3/A001	4/A001	—	—	109	
25	E	SINGLE	—	HMF-5	6 3/8"	3/A001	4/A001	—	—	109	
26	E	SINGLE	—	HMF-5	6 3/8"	3/A001	4/A001	—	—	111	
27	E	SINGLE	—	HMF-5	6 3/8"	3/A001	4/A001	—	—	111	
28	E	SINGLE	—	HMF-5	6 3/8"	3/A001	4/A001	—	—	110	
29	E	SINGLE	—	HMF-5	6 3/8"	3/A001	4/A001	—	—	109	
30	E	SINGLE	—	HMF-5	6 3/8"	3/A001	4/A001	—	—	110	
31	E	SINGLE	—	HMF-5	6 3/8"	3/A001	4/A001	—	—	111	
32	E	SINGLE	—	HMF-5	6 3/8"	3/A001	4/A001	—	—	111	
33	E	SINGLE	—	HMF-5	6 3/8"	3/A001	4/A001	—	—	110	
34	E	SINGLE	—	HMF-5	6 3/8"	3/A001	4/A001	—	—	110	
35	E	SINGLE	—	HMF-5	6 3/8"	3/A001	4/A001	—	—	111	
36	E	SINGLE	—	HMF-5	6 3/8"	3/A001	4/A001	—	—	111	
37	E	SINGLE	—	HMF-5	6 3/8"	3/A001	4/A001	—	—	109	
38	J	SINGLE	ALUM.	HMF-3	6 3/4"	1/A002	2/A002 SIM.	5/A002	—	4	
39	E	SINGLE	—	HMF-5	5 3/4"	5/A001	6/A001	—	—	120	
40	F	SINGLE	—	HMF-6	6 3/8"	3/A001	4/A001	—	—	106A	
41	E	SINGLE	—	HMF-5	6 3/8"	3/A001	4/A001	—	—	119	
42	E	SINGLE	—	HMF-5	6 3/8"	3/A001	4/A001	—	—	106	
43	E	SINGLE	—	HMF-5	6 3/8"	3/A001	4/A001	—	—	106	
44	E	SINGLE	—	HMF-5	5 3/4"	5/A001	6/A001	—	—	120	
45	E	SINGLE	—	HMF-5	6 3/8"	3/A001	4/A001	—	—	103	
46	E	SINGLE	—	HMF-5	11 1/4"	10/A002	10/A002 SIM.	—	1 HOUR	101	
47	F	SINGLE	—	HMF-6	6 3/8"	3/A001	4/A001	—	—	106A	
48	E	SINGLE	—	HMF-5	6 3/8"	3/A001	4/A001	—	—	110	
49	E	SINGLE	—	HMF-5	6 3/8"	3/A001	4/A001	—	—	120	
50	E	SINGLE	—	HMF-5	6 3/8"	3/A001	4/A001	—	—	120	
51	E	SINGLE	—	HMF-5	6 3/8"	3/A001	4/A001	—	—	110	
52	E	SINGLE	—	HMF-5	6 3/8"	3/A001	4/A001	—	—	121	
53	F	SINGLE	—	HMF-6	6 3/8"	3/A001	4/A001	—	—	106A	
54	E	SINGLE	—	HMF-5	6 3/8"	3/A001	4/A001	—	—	120	
55	E	SINGLE	—	HMF-5	6 3/8"	3/A001	4/A001	—	—	106	
56	E	SINGLE	—	HMF-5	6 3/8"	3/A001	4/A001	—	—	122	
57	E	PAIR	—	HMF-23	8 3/4"	13/A002	17/A002	—	45 MIN.	102	
58	E	SINGLE	—	HMF-2	8 3/4"	13/A002	14/A002	—	—	117	
59	D	SINGLE	—	HMF-1	8 3/4"	13/A002	14/A002	—	—	123	
60	E	SINGLE	—	HMF-2	8 3/4"	13/A002	14/A002	—	—	117	
61	E	SINGLE	—	HMF-2	8 3/4"	13/A002	14/A002	—	—	119A	
62	E	SINGLE	—	HMF-2	8 3/4"	13/A002	14/A002	—	—	121	
63	F	SINGLE	—	HMF-3	8 3/4"	11/A002	12/A002	—	45 MIN.	122B	
64	E	PAIR	—	HMF-23	8 3/4"	13/A002	17/A002	—	45 MIN.	102	
65	E	SINGLE	—	HMF-5	6 3/8"	3/A001	4/A001	—	—	112	
66	E	SINGLE	—	HMF-5	11 1/4"	10/A002 SIM.	10/A002 SIM.	—	1 HOUR	101	
67	E	SINGLE	—	HMF-5	10 3/4"	11/A001	12/A001	—	—	106	
68	E	SINGLE	—	HMF-5	6 3/8"	3/A001	4/A001	—	—	121	
69	E	SINGLE	—	HMF-5	6 3/8"	3/A001	4/A001	—	—	120	
70	E	SINGLE	—	HMF-5	6 3/8"	3/A001	4/A001	—	—	110	
71	E	SINGLE	—	HMF-5	6 3/8"	3/A001	4/A001	—	—	120	
72	E	SINGLE	—	HMF-5	6 3/8"	3/A001	4/A001	—	—	110	
73	E	SINGLE	—	HMF-5	6 3/8"	3/A001	4/A001	—	—	106	
74	E	SINGLE	—	HMF-5	6 3/8"	3/A001	4/A001	—	—	120	
75	G	PAIR	—	HMF-8	6 3/8"	3/A001	4/A001	—	—	115	
76	E	SINGLE	—	HMF-5	6 3/8"	3/A001	4/A001	—	—	106	
77	E	SINGLE	—	HMF-5	6 3/8"	3/A001	4/A001	—	—	112	
78	E	SINGLE	—	HMF-5	6 3/8"	3/A001	4/A001	—	—	112	
79	DOOR OMITTED										
80	E	SINGLE	—	HMF-5	6 3/8"	3/A001	4/A001	—	—	118	
81	E	SINGLE	—	HMF-5	6 3/8"	3/A001	4/A001	—	—	120	
82	DOOR OMITTED										
83	E	SINGLE	—	HMF-5	6 3/8"	3/A001	4/A001	—	—	122A	
84	H	SINGLE	ALUM.	HMF-2	6 3/4"	3/A002	4/A002	5/A002	—	7	
85	K	PAIR	ALUM.	HMF-4	6 3/4"	1/A002	2/A002	5/A002	—	6	
86	E	SINGLE	—	HMF-5	6 3/8"	3/A001	4/A001	—	—	124	
87	E	PAIR	—	HMF-23	8 3/4"	13/A002	17/A002	—	45 MIN.	102	

DOOR SCHEDULE – SECOND FLOOR

OPNG NMBR.	DOOR TYPE	DOOR STYLE	DOOR THRESH	DOOR FRAME	DETAILS FRAME DEPTH	DETAILS HEAD	DETAILS JAMB	DETAILS SILL	LBL	HDWE SET	REMARKS
88	B	PAIR	ALUM.	CW-9	7 1/2"	—	12/A005	8/A005	—	8	
89	E	SINGLE	—	HMF-2	13 3/4"	8/A002	9/A002	—	1 HOUR	100	
90	A	PAIR	—	CW-11	7 1/2"	—	—	—	—	9	
91	B	PAIR	ALUM.	CW-9	7 1/2"	—	12/A005	8/A005	—	8	
92	A	PAIR	—	CW-12	7 1/2"	—	—	—	—	9	
93	E	SINGLE	—	HMF-2	8 3/4"	13/A002	14/A002	—	—	117	
94	D	SINGLE	—	HMF-1	8 3/4"	13/A002	14/A002	—	—	123	
95	E	SINGLE	—	HMF-2	8 3/4"	13/A002	14/A002	—	—	117	
96	L	SINGLE	—	GW-2	4"	15/A002	16/A002	24/A002	1 HOUR	116	
97	E	SINGLE	—	HMF-5	6 3/8"	3/A001	4/A001	—	—	122	
98	E	SINGLE	—	HMF-5	6 3/8"	3/A001	4/A001	—	—	121	
99	L	SINGLE	—	GW-1	4"	15/A002	16/A002	24/A002	1 HOUR	116	
100	B	PAIR	ALUM.	CW-14	7 1/2"	—	—	8/A005	—	1	
101	L	SINGLE	—	GW-1	4"	15/A002	16/A002	24/A002	1 HOUR	116	
102	E	SINGLE	—	HMF-2	13 3/4"	8/A002	9/A002	—	1 HOUR	101	
103	H	SINGLE	ALUM.	HMF-2	13 3/4"	6/A002	7/A002	5/A002	1 HOUR	5	
104	B	SINGLE	ALUM.	CW-4	7 1/2"	—	—	8/A005	—	3	
105	E	PAIR	—	HMF-7	6 3/8"	3/A001	4/A001	—	45 MIN.	108	
106	E	SINGLE	—	HMF-5	5 3/4"	5/A001	6/A001	—	—	120	
107	E	SINGLE	—	HMF-5	5 3/4"	5/A001	6/A001	—	—	120	
108	E	SINGLE	—	HMF-5	5 3/4"	5/A001	6/A001	—	—	120	
109	E	PAIR	—	HMF-7	6 3/8"	3/A001	4/A001	—	45 MIN.	108	
110	E	SINGLE	—	HMF-5	6 3/8"	3/A001	4/A001	—	45 MIN.	107	
111	E	SINGLE	—	HMF-5	6 3/8"	3/A001	4/A001	—	45 MIN.	107	
112	E	SINGLE	—	HMF-22	6 3/8"	3/A001	4/A001	—	45 MIN.	107	
112A	E	SINGLE	—	HMF-5	6 3/8"	3/A001	4/A001	—	45 MIN.	107	
113	E	PAIR	—	HMF-23	8 3/4"	13/A002	17/A002 SIM.	—	45 MIN.	102	
114	E	SINGLE	—	HMF-2	8 3/4"	11/A002	12/A002	—	45 MIN.	122	
115	E	SINGLE	—	HMF-5	6 3/8"	3/A001	4/A001	—	—	122	
116	DOOR OMITTED										
117	E	SINGLE	—	AF-20	4 1/2"	—	—	—	—	112	
118	E	SINGLE	—	HMF-5	6 3/8"	3/A001	4/A001	—	—	120	
119	E	SINGLE	—	AF-19	4 1/2"	—	—	—	—	112	
120	E	SINGLE	—	AF-18	4 1/2"	—	—	—	—	112	
121	E	SINGLE	—	AF-17	4 1/2"	—	—	—	—	112	
122	E	SINGLE	—	AF-16	4 1/2"	—	—	—	—	112	
123	E	SINGLE	—	HMF-5	6 3/8"	3/A001	4/A001	—	—	112	
124	E	SINGLE	—	AF-21	4 1/2"	—	—	—	—	112	
125	E	SINGLE	—	AF-22	4 1/2"	—	—	—	—	112	
126	E	SINGLE	—	AF-15	4 1/2"	—	—	—	—	105	
127	E	SINGLE	—	HMF-5	6 3/8"	3/A001	4/A001	—	—	120	
128	E	SINGLE	—	AF-14	4 1/2"	—	—	—	—	110	
129	E	SINGLE	—	AF-13	4 1/2"	—	—	—	—	110	
130	E	PAIR	—	HMF-23	8 3/4"	13/A002	17/A002	—	45 MIN.	102	
131	E	SINGLE	—	HMF-5	6 3/8"	3/A001	4/A001	—	—	120	
132	E	SINGLE	—	HMF-2	11 1/4"	10/A002 SIM.	10/A002 SIM.	—	1 HOUR	101	
133	E	SINGLE	—	HMF-5	6 3/8"	3/A001	4/A001	—	—	109	
134	E	SINGLE	—	AF-12	4 1/2"	—	—	—	—	110	
135	E	SINGLE	—	AF-11	4 1/2"	—	—	—	—	110	
136	E	SINGLE	—	AF-10	4 1/2"	—	—	—	—	110	
137	E	PAIR	—	HMF-7	7 1/8"	9/A001	10/A001	—	1 1/2 HOUR	102	
138	B	PAIR	ALUM.	AF-9	4 1/2"	—	—	8/A005	—	1	

ASU
ARKANSAS STATE UNIVERSITY

DONALD W. REYNOLDS CENTER FOR HEALTH SCIENCES
ARKANSAS STATE UNIVERSITY
ARKANSAS
JONESBORO,

BRACKETT KRENNERICH architects
100 East Huntington, Suite D P.O. Box: 1655 Jonesboro, Arkansas 72403-1655
870-932-0575 Fax 870-932-0571 www.bkarchs.com

Commission Number 12406
A001
Date: January 25, 2008

S:\Projects\Current\ASU Reynolds Center for Health Sciences\Working Drawings\A001.dwg Wednesday, January 23, 2008 Steve

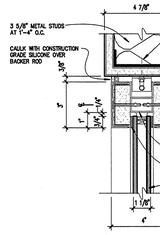

head detail (19)

SCALE: 3" = 1'-0"

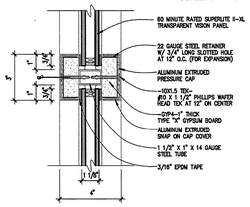

mullion detail (20)

SCALE: 3" = 1'-0"

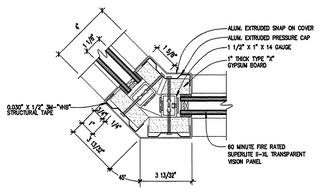

45° mullion detail (21)

SCALE: 3" = 1'-0"

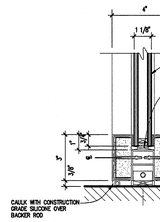

sill detail (22)

SCALE: 3" = 1'-0"

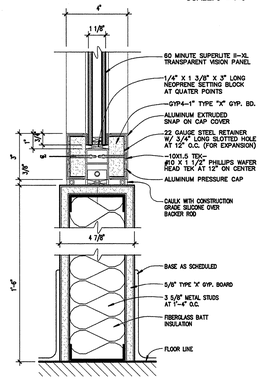

sill detail (23)

SCALE: 3" = 1'-0"

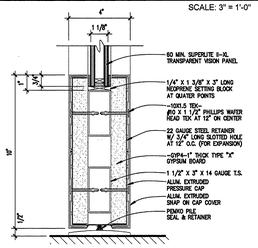

threshold detail (24)

SCALE: 3" = 1'-0"

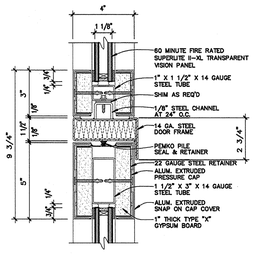

head detail (15)

SCALE: 3" = 1'-0"

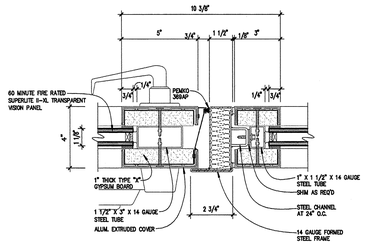

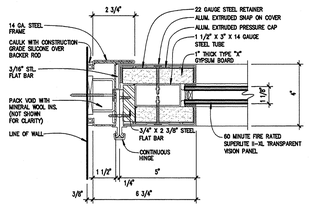

jamb details (16)

SCALE: 3" = 1'-0"

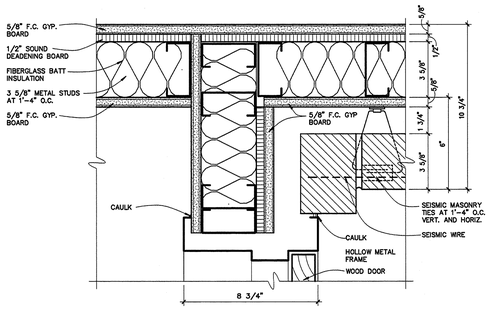

jamb detail (17)

SCALE: 3" = 1'-0"

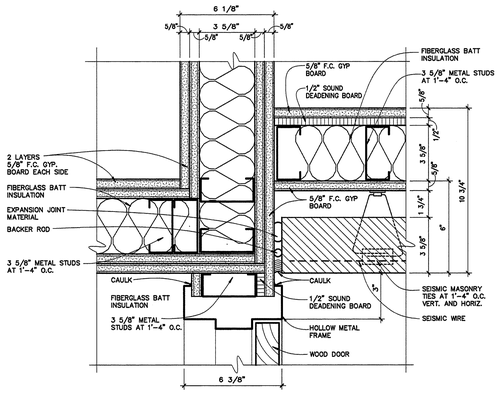

jamb detail (18)

SCALE: 3" = 1'-0"

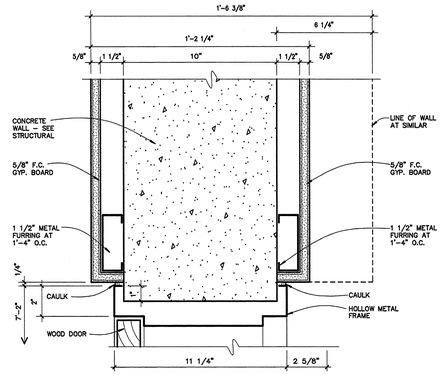

head detail (10)

(JAMB DETAIL SIMILAR)(INTERIOR) SCALE: 3" = 1'-0"

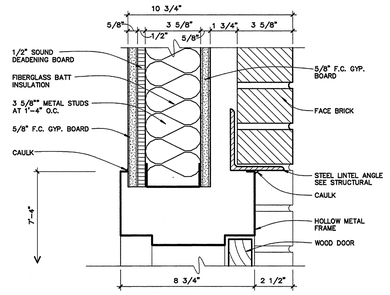

head detail (11)

45 MINUTE RATED ASSEMBLY(INTERIOR) SCALE: 3" = 1'-0"

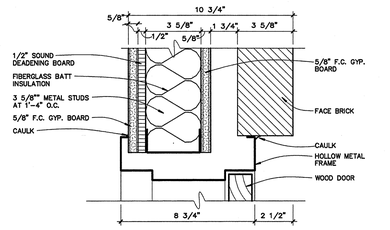

jamb detail (12)

45 MINUTE RATED ASSEMBLY(INTERIOR) SCALE: 3" = 1'-0"

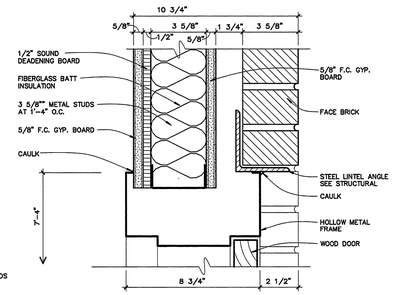

head detail (13)

INTERIOR SCALE: 3" = 1'-0"

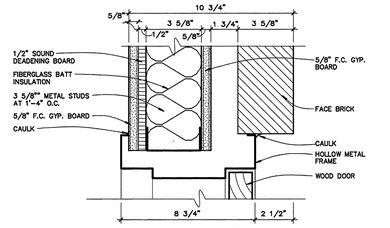

jamb detail (14)

INTERIOR SCALE: 3" = 1'-0"

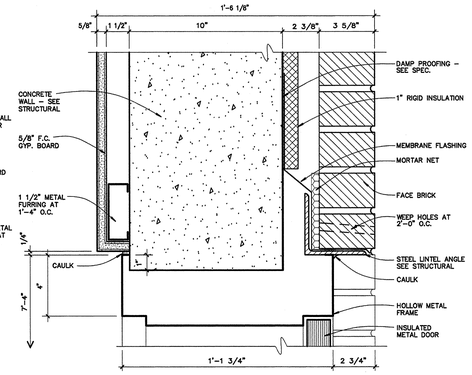

head detail (6)

EXTERIOR SCALE: 3" = 1'-0"

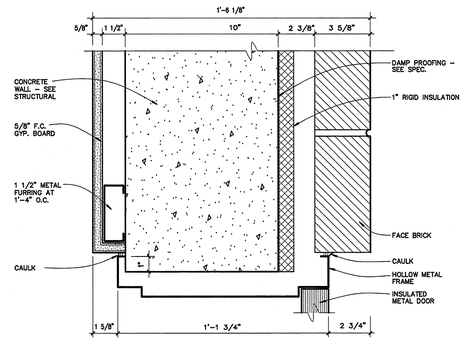

jamb detail (7)

EXTERIOR SCALE: 3" = 1'-0"

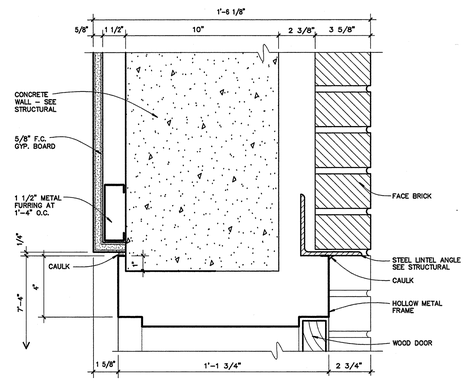

head detail (8)

INTERIOR SCALE: 3" = 1'-0"

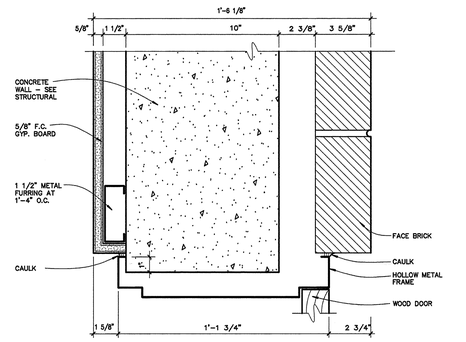

jamb detail (9)

INTERIOR SCALE: 3" = 1'-0"

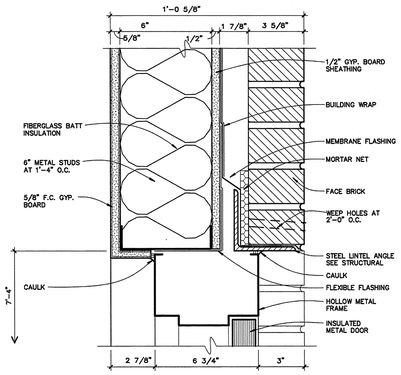

head detail (1)

EXTERIOR SCALE: 3" = 1'-0"

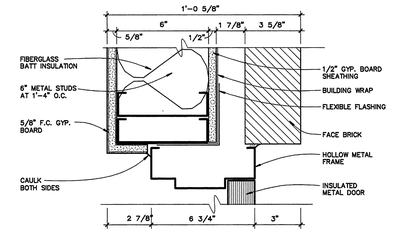

jamb detail (2)

EXTERIOR SCALE: 3" = 1'-0"

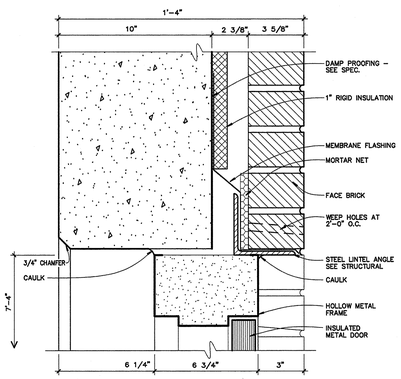

head detail (3)

EXTERIOR SCALE: 3" = 1'-0"

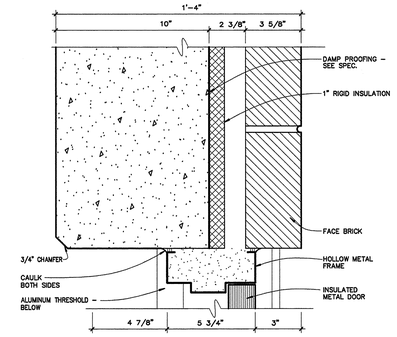

jamb detail (4)

EXTERIOR SCALE: 3" = 1'-0"

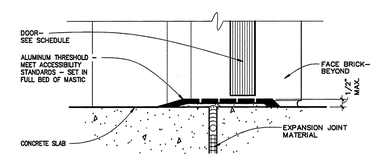

sill detail (5)

SCALE: 3" = 1'-0"

ASU ARKANSAS STATE UNIVERSITY

DONALD W. REYNOLDS CENTER FOR HEALTH SCIENCES

ARKANSAS STATE UNIVERSITY
JONESBORO, ARKANSAS

BRACKETT KRENNERICH architects

100 East Huntington, Suite D P.O. Box 16555 Jonesboro, Arkansas 72403-1555
870-932-0571 Fax 870-932-0575 www.bkarchs.com

Commission Number 12406

A002

Date: January 25, 2008

S:\Projects\Current\ASU Reynolds Center for Health Sciences\Working Drawings\A002 Details.dwg January 23, 2008 Steve

ARKANSAS STATE UNIVERSITY

DONALD W. REYNOLDS CENTER FOR HEALTH SCIENCES

ARKANSAS STATE UNIVERSITY

JONESBORO, ARKANSAS

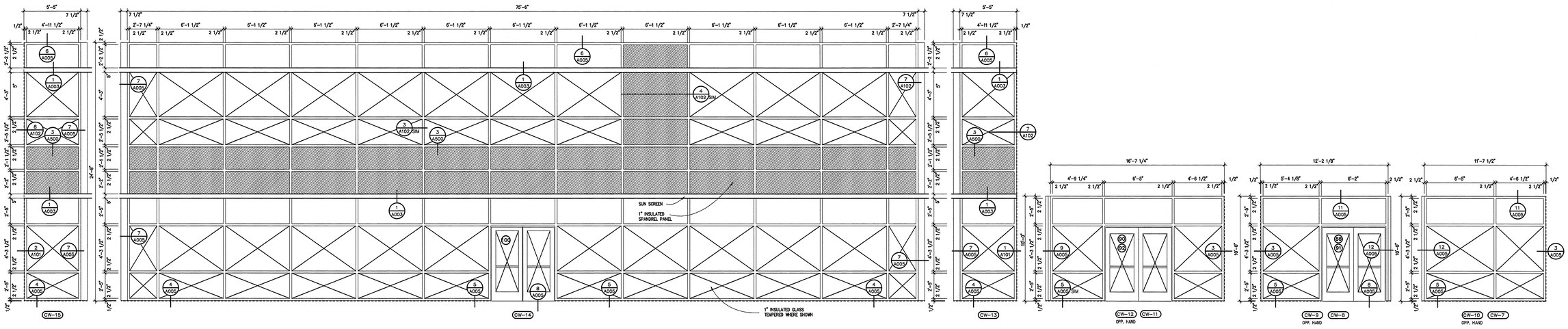

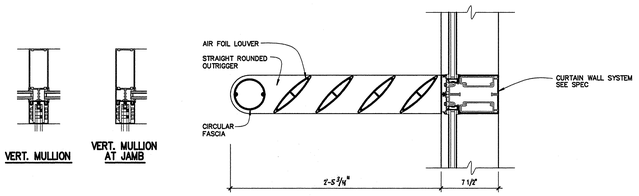

sun shade detail(s) 1

SCALE: 1 1/2" = 1'-0"

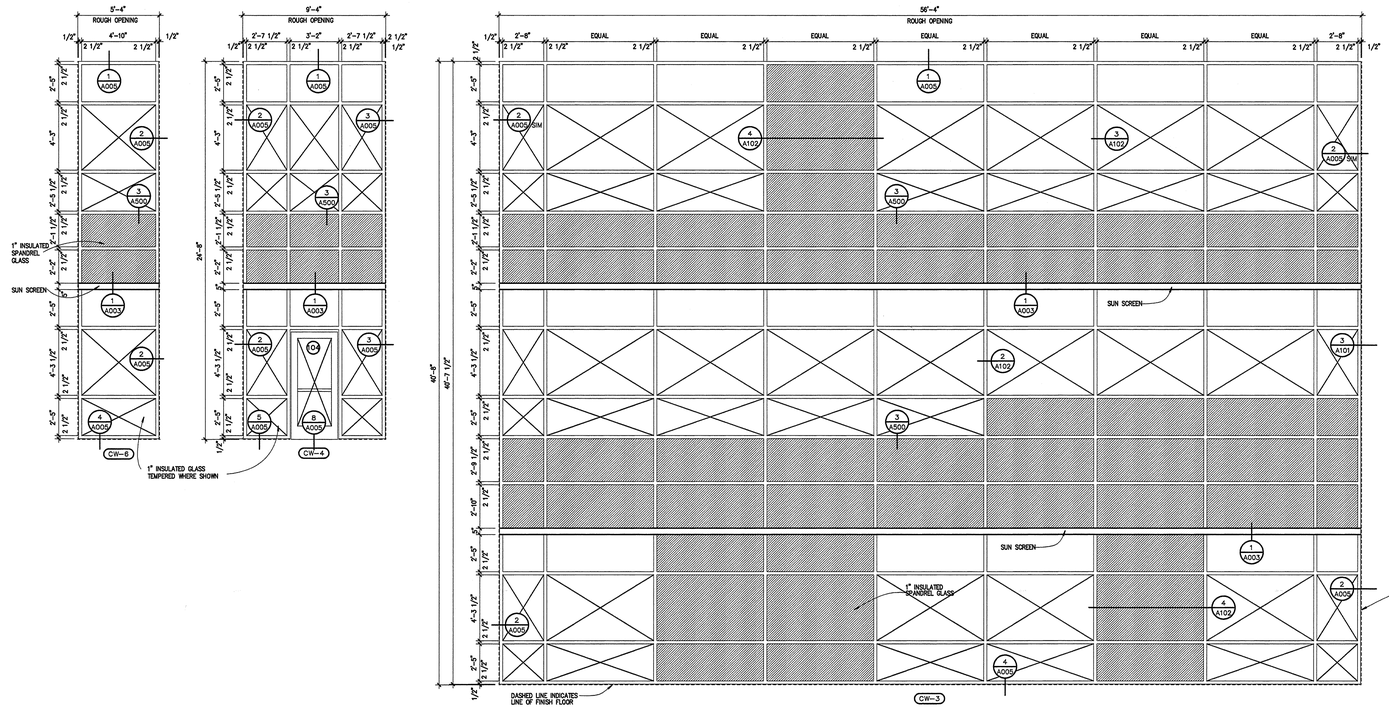

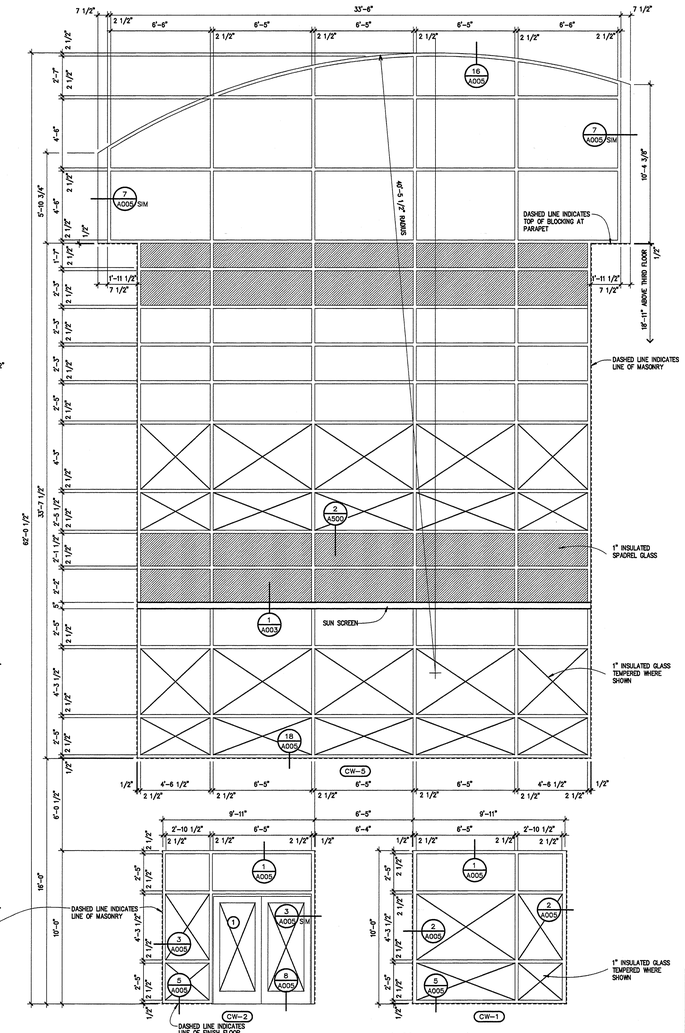

NOTE: "X" DENOTES TEMPERED GLASS

curtain wall schedule

SCALE: 1/4" = 1'-0"

Commission Number 12406

A003

Date: January 25, 2008

BRACKETT KRENNERICH architects

100 East Huntington, Suite D P.O. Box 1655 Jonesboro, Arkansas 72403-1655 www.bkarchs.com

870-932-0571 Fax: 870-932-0975

S:\BKA\Projects\Current\ASU Reynolds Center for Health Sciences\Working Drawings\A003.dwg January 23, 2008

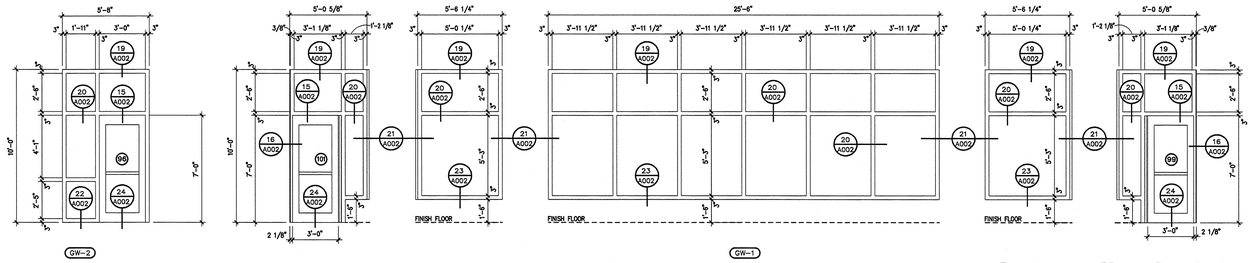

glass wall schedule

SCALE: 1/4" = 1'-0"

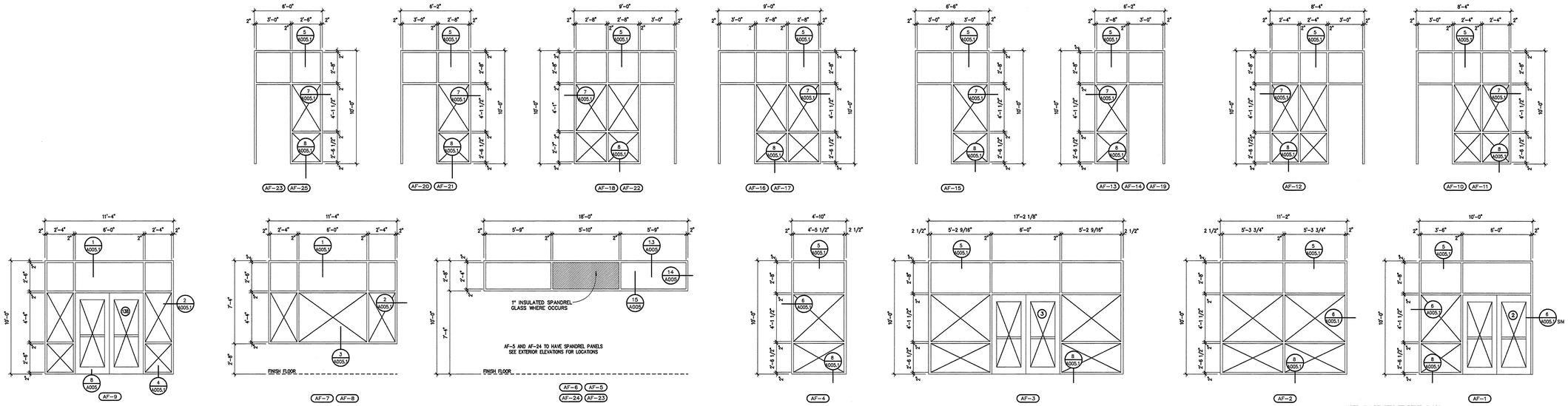

NOTE: "X" DENOTES TEMPERED GLASS

alumnium frame schedule

SCALE: 1/4" = 1'-0"

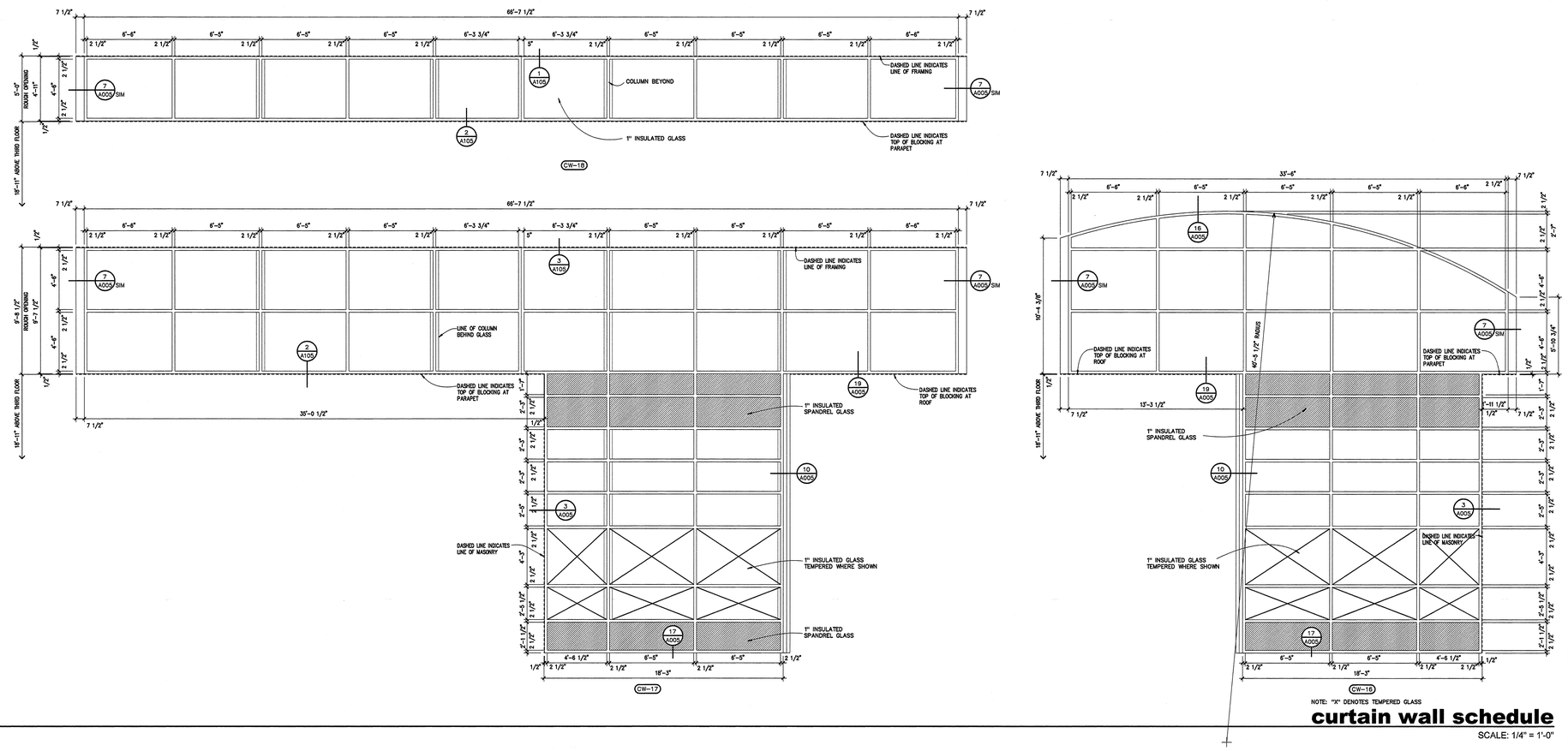

NOTE: "X" DENOTES TEMPERED GLASS

curtain wall schedule

SCALE: 1/4" = 1'-0"

ASU
ARKANSAS STATE UNIVERSITY

DONALD W. REYNOLDS CENTER FOR HEALTH SCIENCES

ARKANSAS STATE UNIVERSITY
JONESBORO, ARKANSAS

BRACKETT KRENNERICH architects

100 East Huntington, Suite D P.O. Box 16555 Jonesboro, Arkansas 72403-16555
870-932-4571 Fax: 870-932-4975 www.bkarchs.com

Commission Number 12406

A004

Date: January 25, 2008

S:\BA\Projects\Current\ASU Reynolds Center for Health Sciences\Working Drawings\A004.dwg Wednesday January 23, 2008

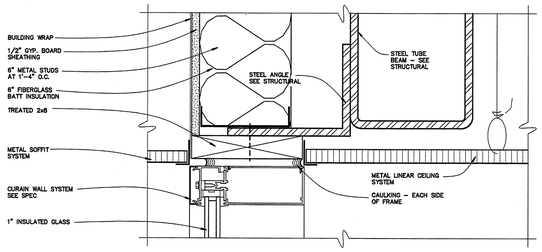

head detail 16

SCALE: 3" = 1'-0"

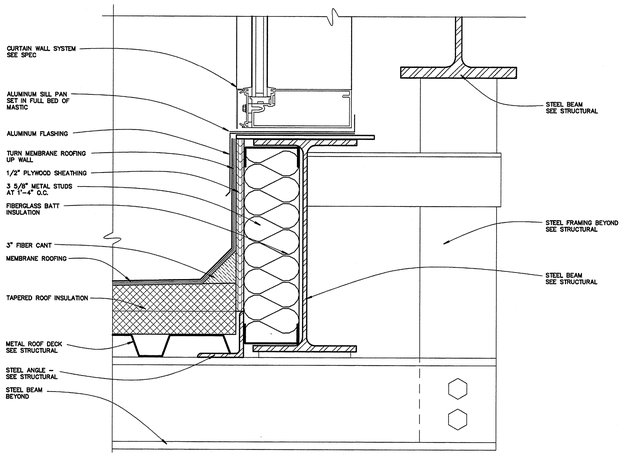

sill detail 17

SCALE: 3" = 1'-0"

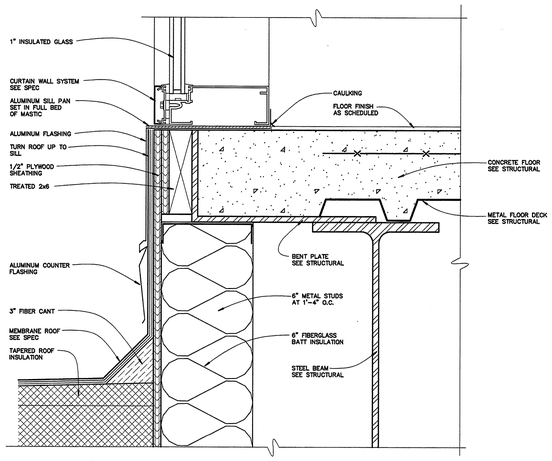

sill detail 18

SCALE: 3" = 1'-0"

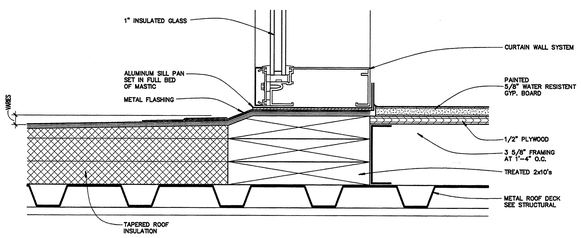

sill detail 19

SCALE: 3" = 1'-0"

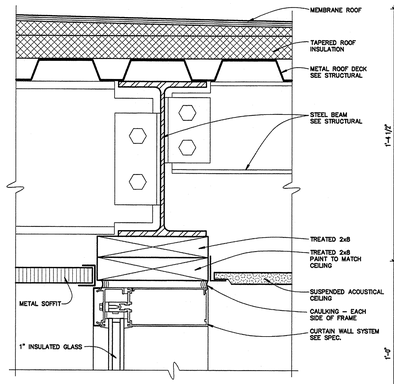

head detail 11

SCALE: 3" = 1'-0"

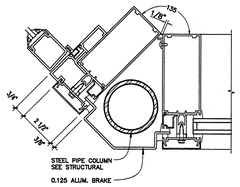

jamb detail 12

SCALE: 3" = 1'-0"

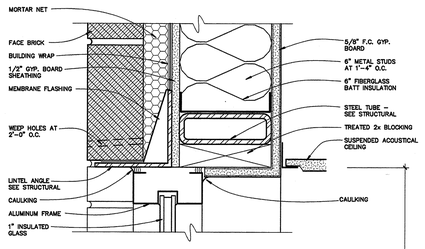

head detail 13

SCALE: 3" = 1'-0"

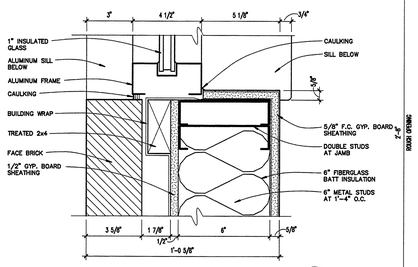

jamb detail 14

SCALE: 3" = 1'-0"

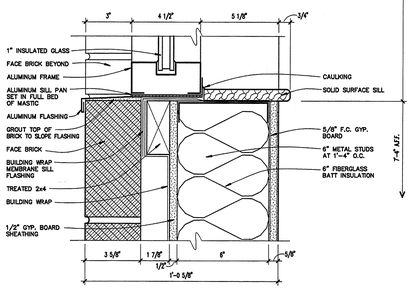

sill detail 15

SCALE: 3" = 1'-0"

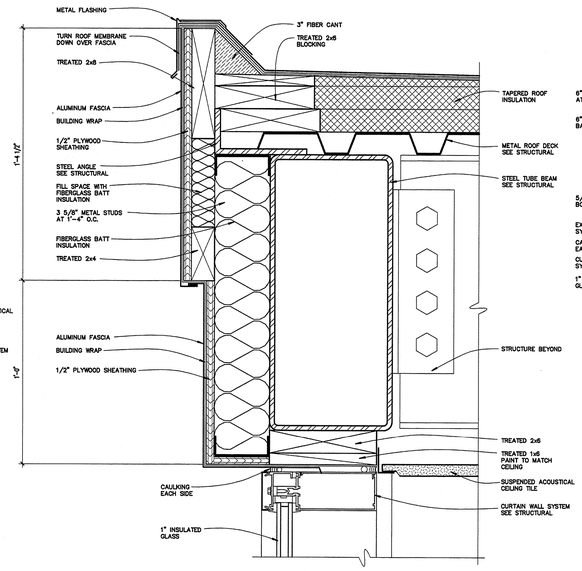

head detail 6

SCALE: 3" = 1'-0"

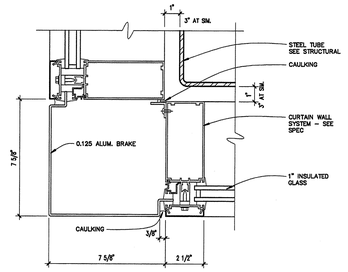

jamb detail 7

SCALE: 3" = 1'-0"

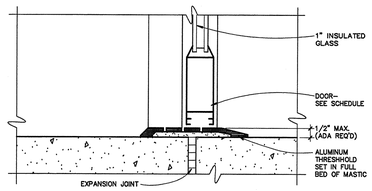

sill detail 8

SCALE: 3" = 1'-0"

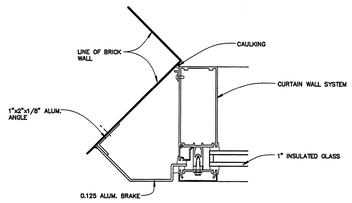

jamb detail 9

SCALE: 3" = 1'-0"

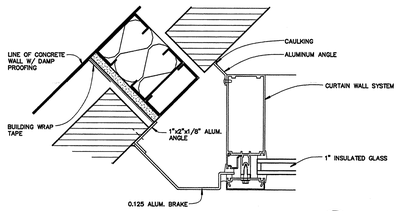

jamb detail 10

SCALE: 3" = 1'-0"

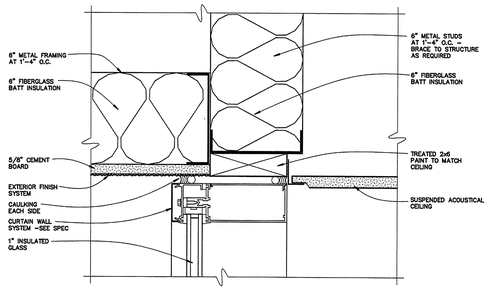

head detail 1

SCALE: 3" = 1'-0"

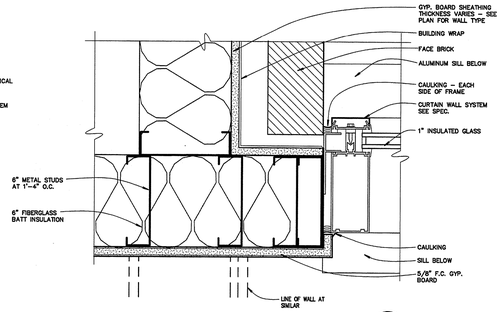

jamb detail 2

SCALE: 3" = 1'-0"

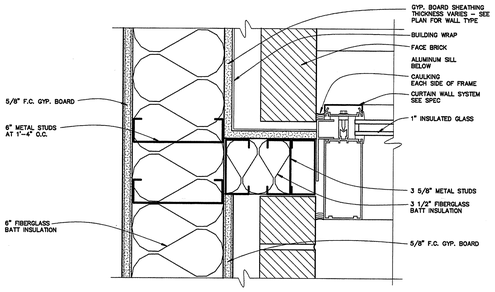

jamb detail 3

SCALE: 3" = 1'-0"

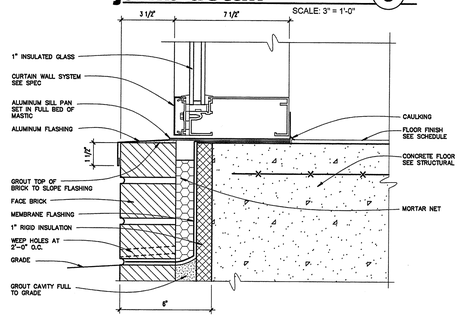

sill detail 4

SCALE: 3" = 1'-0"

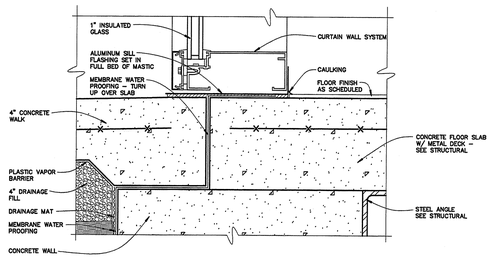

sill detail 5

SCALE: 3" = 1'-0"

ASU ARKANSAS STATE UNIVERSITY

DONALD W. REYNOLDS CENTER FOR HEALTH SCIENCES

ARKANSAS STATE UNIVERSITY

JONESBORO, ARKANSAS

BRACKETT KRENNERICH architects

100 East Huntington, Suite D P.O. Box 1655 Jonesboro, Arkansas 72403-1655
870-932-4571 Fax 870-932-0975 www.bkarchs.com

Commission Number 12406

A005

Date: January 25, 2008

S:\Projects\Current\ASU Reynolds Center for Health Sciences\Working Drawings\A005Details.dwg, January 23, 2008 Steve

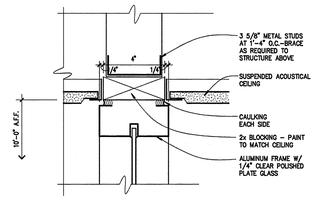

head detail 5

SCALE: 3" = 1'-0"

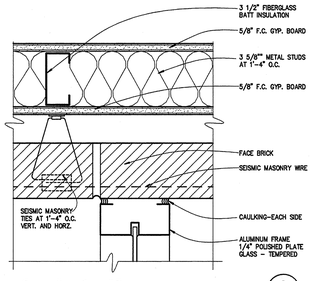

jamb detail 6

SCALE: 3" = 1'-0"

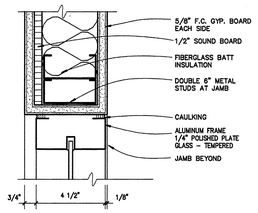

jamb detail 7

SCALE: 3" = 1'-0"

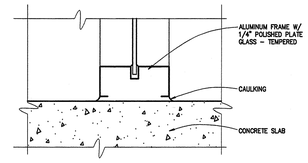

jamb detail 8

SCALE: 3" = 1'-0"

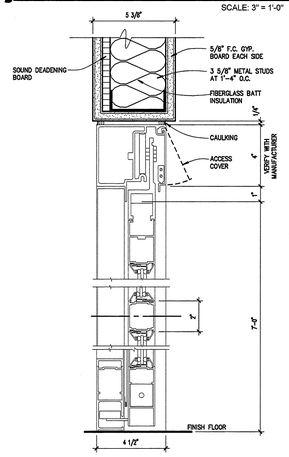

head detail 9

SCALE: 3" = 1'-0"

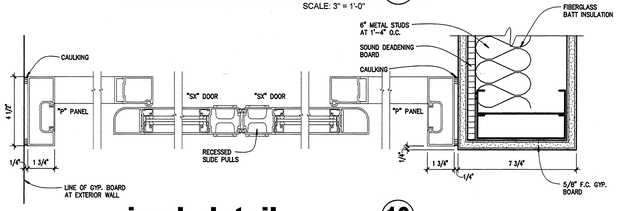

jamb detail 10

SCALE: 3" = 1'-0"

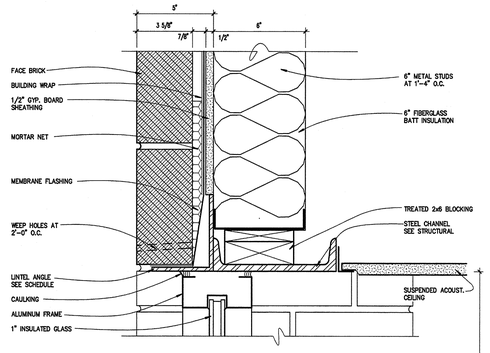

head detail 1

SCALE: 3" = 1'-0"

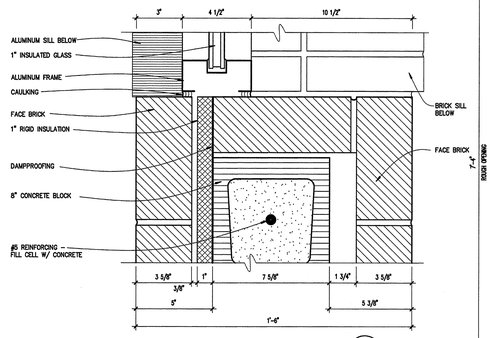

jamb detail 2

SCALE: 3" = 1'-0"

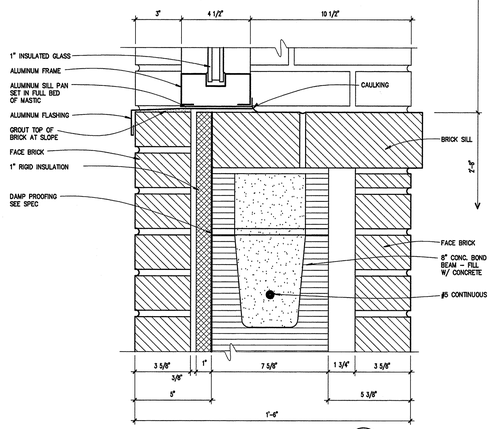

sill detail 3

SCALE: 3" = 1'-0"

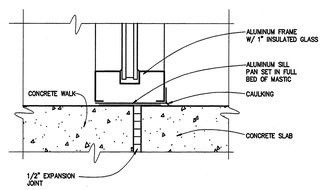

sill detail 4

SCALE: 3" = 1'-0"

ASU
ARKANSAS STATE UNIVERSITY

DONALD W. REYNOLDS CENTER FOR HEALTH SCIENCES

ARKANSAS STATE UNIVERSITY
JONESBORO, ARKANSAS

BRACKETT KRENNERICH architects
100 East Huntington, Suite D P.O. Box 1655 Jonesboro, Arkansas 72403-1655
870-932-4571 Fax 870-932-0975 www.bkarchs.com

Commission Number 12406

A005.1

Date: January 25, 2008

S:\Projects\Current\ASU Reynolds Center for Health Sciences\Working Drawings\A005.dwg, January 23, 2008 Steve

FINISH SCHEDULE - SECOND FLOOR

ROOM NO.	ROOM NAME	FLOOR	BASE	WALLS	CEILING HEIGHT	CEILING
AAV02	VESTIBULE	PORCELAIN TILE	4" PORCELAIN BASE	BRICK	10'-0"	SUSPENDED METAL CEILING
BBV02	VESTIBULE	PORCELAIN TILE	4" PORCELAIN BASE	BRICK	10'-0"	SUSPENDED METAL CEILING
AAL02	LOBBY	PORCELAIN TILE (2)	4" PORCELAIN BASE	BRICK (7)	10'-0"	SUSPENDED METAL CEILING (8)
BBL02	LOBBY	CERAMIC GRANULAR	4" CERAMIC GRANULAR	PAINTED GYP. BOARD	10'-0"	2x2 ACCOUSTICAL CEILING (6)
AAA02	ANTE	PORCELAIN TILE	4" PORCELAIN BASE	BRICK	10'-0"	SUSPENDED METAL CEILING
AAC02	CORRIDOR	CERAMIC GRANULAR	4" CERAMIC GRANULAR	PAINTED GYP. BOARD	10'-0"	2x2 ACCOUSTICAL CEILING (6)
BBC02	HALL	CERAMIC GRANULAR	4" CERAMIC GRANULAR	PAINTED GYP. BOARD	10'-0"	2x2 ACCOUSTICAL CEILING
CCC02	CORRIDOR	CERAMIC GRANULAR	4" CERAMIC GRANULAR	PAINTED GYP. BOARD	10'-0"	2x2 ACCOUSTICAL CEILING (6)
DDC02	WALKWAY	CERAMIC GRANULAR	4" CERAMIC GRANULAR	PAINTED GYP. BOARD	10'-0"	2x2 ACCOUSTICAL CEILING (6)
AAS02	STAIR A	PORCELAIN TILE (10)	PAINTED STEEL STRINGER	BRICK	VARIES	LINEAR METAL CEILING
BBS02	STAIR B	PORCELAIN TILE (10)	PAINTED STEEL STRINGER	BRICK	VARIES	LINEAR METAL CEILING
CCS02	STAIR C	CERAMIC GRANULAR (9)	4" CERAMIC GRANULAR	PAINTED GYP. BOARD	VARIES	PAINTED GYPSUM BOARD
DDS02	STAIR D	CERAMIC GRANULAR (9)	4" CERAMIC GRANULAR	PAINTED GYP. BOARD	VARIES	PAINTED GYPSUM BOARD
AAE02	ELEVATOR (SHAFT)	—	—	EXPOSED CONCRETE	—	
BBE02	ELEVATOR (SHAFT)	—	—	EXPOSED CONCRETE	—	
200	ROOM NUMBER NOT ASSIGNED TO ROOM					
201	ROOM NUMBER NOT ASSIGNED TO ROOM					
202	STORAGE	CERAMIC GRANULAR	4" CERAMIC GRANULAR	PAINTED GYP. BOARD	8'-0"	2x2 ACCOUSTICAL CEILING
203	CONFERENCE	CARPET	4" RUBBER COVE	VINYL WALL COVERING	10'-0"	2x2 ACCOUSTICAL CEILING
204	GROUP STUDY	CERAMIC GRANULAR	4" CERAMIC GRANULAR	PAINTED GYP. BOARD	10'-0"	2x2 ACCOUSTICAL CEILING
205	GROUP STUDY	CERAMIC GRANULAR	4" CERAMIC GRANULAR	PAINTED GYP. BOARD	10'-0"	2x2 ACCOUSTICAL CEILING
206	GROUP STUDY	CERAMIC GRANULAR	4" CERAMIC GRANULAR	PAINTED GYP. BOARD	10'-0"	2x2 ACCOUSTICAL CEILING
207	ROOM NUMBER NOT ASSIGNED TO ROOM					
208	GROUP STUDY	CERAMIC GRANULAR	4" CERAMIC GRANULAR	PAINTED GYP. BOARD	10'-0"	2x2 ACCOUSTICAL CEILING & GYP. BD.
209	ROOM NUMBER NOT ASSIGNED TO ROOM					
210	GROUP STUDY	CERAMIC GRANULAR	4" CERAMIC GRANULAR	PAINTED GYP. BOARD	10'-0"	2x2 ACCOUSTICAL CEILING
211	RECEPTION / WAITING	CARPET	4" RUBBER COVE	PAINTED GYP. BOARD	10'-0"	2x2 ACCOUSTICAL CEILING
211A	OFFICE	CARPET	4" RUBBER COVE	PAINTED GYP. BOARD	10'-0"	2x2 ACCOUSTICAL CEILING
211B	OFFICE	CARPET	4" RUBBER COVE	PAINTED GYP. BOARD	10'-0"	2x2 ACCOUSTICAL CEILING
211C	OFFICE	CARPET	4" RUBBER COVE	PAINTED GYP. BOARD	10'-0"	2x2 ACCOUSTICAL CEILING
211D	OFFICE	CARPET	4" RUBBER COVE	PAINTED GYP. BOARD	10'-0"	2x2 ACCOUSTICAL CEILING
211E	OFFICE	CARPET	4" RUBBER COVE	PAINTED GYP. BOARD	10'-0"	2x2 ACCOUSTICAL CEILING
211F	STORAGE	CARPET	4" RUBBER COVE	PAINTED GYP. BOARD	8'-0"	2x2 ACCOUSTICAL CEILING
211G	OFFICE	CARPET	4" RUBBER COVE	PAINTED GYP. BOARD	10'-0"	2x2 ACCOUSTICAL CEILING
211H	OFFICE	CARPET	4" RUBBER COVE	PAINTED GYP. BOARD	10'-0"	2x2 ACCOUSTICAL CEILING
211J	OFFICE	CARPET	4" RUBBER COVE	PAINTED GYP. BOARD	10'-0"	2x2 ACCOUSTICAL CEILING
212	STORAGE	CERAMIC GRANULAR	6" CERAMIC GRANULAR	PAINTED GYP. BOARD	8'-0"	2x2 ACCOUSTICAL CEILING
213	HOUSEKEEPING	PORCELAIN TILE	PORCELAIN BASE	PAINTED GYP. BOARD (4)	8'-0"	2x2 MOISTURE RESISTANT SUSP. CEILING TILE
213A	ELECTRICAL	EXPOSED CONCRETE	4" RUBBER COVE	PAINTED GYP. BOARD	—	OPEN TO STRUCTURE
214	COMPUTER LAB	CARPET (1)	4" RUBBER COVE	PAINTED GYP. BOARD	12'-0"	2x2 ACCOUSTICAL CEILING (6)
215	ROOM NUMBER NOT ASSIGNED TO ROOM					
216	CLASSROOM	CARPET	4" RUBBER COVE	PAINTED GYP. BOARD	10'-0"	2x2 ACCOUSTICAL CEILING
217	STUDENT LOCKERS	CERAMIC GRANULAR	6" CERAMIC GRANULAR	PAINTED GYP. BOARD	10'-0"	2x2 ACCOUSTICAL CEILING (6)
218	ROOM NUMBER NOT ASSIGNED TO ROOM					
219	ELECTRICAL	EXPOSED CONCRETE	4" RUBBER COVE	PAINTED GYP. BOARD	—	OPEN TO STRUCTURE
220	ROOM NUMBER NOT ASSIGNED TO ROOM					
221	I.T.	EXPOSED CONCRETE	4" RUBBER COVE	PAINTED GYP. BOARD	—	OPEN TO STRUCTURE
222	CLASSROOM	CARPET	4" RUBBER COVE (11)	PAINTED GYP. BOARD	10'-4"	2x2 ACCOUSTICAL CEILING
222A	STORAGE	CARPET	4" RUBBER COVE	PAINTED GYP. BOARD	8'-0"	2x2 ACCOUSTICAL CEILING
222B	STORAGE	CARPET	4" RUBBER COVE	PAINTED GYP. BOARD	8'-0"	2x2 ACCOUSTICAL CEILING
222C	STORAGE	CARPET	4" RUBBER COVE	PAINTED GYP. BOARD	8'-0"	2x2 ACCOUSTICAL CEILING
223	STUDENT LOUNGE	CERAMIC GRANULAR	4" CERAMIC GRANULAR	PAINTED GYP. BOARD	10'-0"	2x2 ACCOUSTICAL CEILING (6)
223A	VENDING	CERAMIC GRANULAR	4" CERAMIC GRANULAR	PAINTED GYP. BOARD	10'-0"	2x2 ACCOUSTICAL CEILING (6)
224	MEN	CERAMIC GRANULAR	6" CERAMIC GRANULAR	PAINTED GYP. BOARD	9'-0"	2x2 ACCOUSTICAL CEILING (6)
225	ROOM NUMBER NOT ASSIGNED TO ROOM					
226	CHASE	EXPOSED CONCRETE	NONE	EXPOSED STUDS	—	OPEN TO STRUCTURE
227	ROOM NUMBER NOT ASSIGNED TO ROOM					
228	WOMEN	CERAMIC GRANULAR	6" CERAMIC GRANULAR	PAINTED GYP. BOARD	9'-0"	2x2 ACCOUSTICAL CEILING (6)

REMARKS

1. CARPET TO BE ANTI STATIC
2. PORCELAIN TILE FLOOR TO HAVE PATTERN SEE SHEET A007 FOR PATTERN
3. NORTH WALL TO RECIEVE TILE WAINSCOT UP WALL 7'-4" A.F.F. SEE SHEET A007.1
4. JANITOR SINK TO HAVE CEREMIC TILE WAINSCOT BEHIND SINK UP WALL 4'-0"A.F.F. SEE SHEET A600
5. WALLS TO RECIEVE CEREMIC TILE WAINSCOT UP TO 7'-0" A.F.F. SEE SHEET A600
6. PAINTED GYPSUM BOARD FURR DOWNS. SEE REFLECTED CEILING PLANS.
7. METAL LINEAR CEILING SYSTEM APPLIED TO WALLS AS SHOWN ON DRAWING
8. CLOUDS AS SHOWN ON REFELECTED CEILING PLAN
9. PROVIDE RUBBER STAIR TREAD AND RISER AT STAIRS
10. PROVIDE PORCELAIN TILE RISER AND TREADS W/ METAL STAIR NOSING AT STEPS
11. PROVIDE CARPET AT VERTICAL FACES OF PLATFORM AND SEATING RISERS

FINISH SCHEDULE - THIRD FLOOR

ROOM NO.	ROOM NAME	FLOOR	BASE	WALLS	CEILING HEIGHT	CEILING
AAL03	LOBBY	PORCELAIN TILE (10)(2)	PORCELAIN TILE	BRICK (7)	VARIES	SUSPENDED METAL CEILING
AAA03	ANTE	PORCELAIN TILE	PORCELAIN TILE	BRICK	10'-0"	SUSPENDED METAL CEILING
BBL03	LOBBY	CERAMIC GRANULAR	4" CERAMIC GRANULAR	PAINTED GYP. BOARD	10'-0"	2x2 ACCOUSTICAL CEILING & GYP.BD. (6)
AAC03	CORRIDOR	CERAMIC GRANULAR	4" CERAMIC GRANULAR	PAINTED GYP. BOARD	10'-0"	2x2 ACCOUSTICAL CEILING & GYP.BD. (6)
BBC03	CORRIDOR	CERAMIC GRANULAR	4" CERAMIC GRANULAR	PAINTED GYP. BOARD	10'-0"	2x2 ACCOUSTICAL CEILING (6)
CCC03	CORRIDOR	CERAMIC GRANULAR	4" CERAMIC GRANULAR	PAINTED GYP. BOARD	10'-0"	2x2 ACCOUSTICAL CEILING
DDC03	HALL	CERAMIC GRANULAR	4" CERAMIC GRANULAR	PAINTED GYP. BOARD	10'-0"	2x2 ACCOUSTICAL CEILING
BBS03	STAIR B	PORCELAIN TILE (10)	PAINTED STEEL STRINGER	BRICK		LINEAR METAL CEILING
CCS03	STAIR C	CERAMIC GRANULAR (9)	4" CERAMIC GRANULAR	PAINTED GYP. BOARD	13'-1"	2x2 ACCOUSTICAL CEILING & GYP. BD.
DDS03	STAIR D	CERAMIC GRANULAR (9)	4" CERAMIC GRANULAR	PAINTED GYP. BOARD	10'-0"	2x2 ACCOUSTICAL CEILING
AAE03	ELEVATOR (SHAFT)	—	—	EXPOSED CONCRETE	—	EXPOSED METAL DECK
BBE03	ELEVATOR (SHAFT)	—	—	EXPOSED CONCRETE	—	EXPOSED METAL DECK
300	ROOM NUMBER NOT ASSIGNED TO ROOM					
301	ROOM NUMBER NOT ASSIGNED TO ROOM					
302	STORAGE	CERAMIC GRANULAR	4" CERAMIC GRANULAR	PAINTED GYP. BOARD	8'-0"	2x2 ACCOUSTICAL CEILING
303	NURSE ANESTHETIST LABORATORY	CERAMIC GRANULAR	4" CERAMIC GRANULAR	PAINTED GYP. BOARD	10'-0"	2x2 ACCOUSTICAL CEILING
303A	EQUIPMENT STORAGE	CERAMIC GRANULAR	4" CERAMIC GRANULAR	PAINTED GYP. BOARD	10'-0"	2x2 ACCOUSTICAL CEILING
304	ROOM NUMBER NOT ASSIGNED TO ROOM					
305	SECRETARY	CARPET	4" RUBBER COVE	PAINTED GYP. BOARD	10'-0"	2x2 ACCOUSTICAL CEILING
306	ROOM NUMBER NOT ASSIGNED TO ROOM					
307	CLASSROOM	CARPET	4" RUBBER COVE	PAINTED GYP. BOARD	10'-0"	2x2 ACCOUSTICAL CEILING
308	OFFICE	CARPET	4" RUBBER COVE	PAINTED GYP. BOARD	10'-0"	2x2 ACCOUSTICAL CEILING
309	ROOM NUMBER NOT ASSIGNED TO ROOM					
310	OFFICE	CARPET	4" RUBBER COVE	PAINTED GYP. BOARD	10'-0"	2x2 ACCOUSTICAL CEILING
311	ROOM NUMBER NOT ASSIGNED TO ROOM					
312	OFFICE	CARPET	4" RUBBER COVE	PAINTED GYP. BOARD	10'-0"	2x2 ACCOUSTICAL CEILING
313	RECORD STORAGE	CERAMIC GRANULAR	4" CERAMIC GRANULAR	PAINTED GYP. BOARD	8'-0"	2x2 ACCOUSTICAL CEILING
314	ELECTRICAL	EXPOSED CONCRETE	4" RUBBER	PAINTED GYP. BOARD	—	OPEN TO STRUCTURE
315	MECHANICAL	EXPOSED CONCRETE	4" RUBBER COVE	PAINTED GYP. BOARD	—	OPEN TO STRUCTURE
316	STORAGE	CERAMIC GRANULAR	4" CERAMIC GRANULAR	PAINTED GYP. BOARD	8'-0"	2x2 ACCOUSTICAL CEILING
317	ROOM NUMBER NOT ASSIGNED TO ROOM					
318	HOUSEKEEPING	CERAMIC GRANULAR	6" CERAMIC GRANULAR	PAINTED GYP. BOARD (4)	8'-0"	2x2 MOISTURE RESISTANT SUSP. CEILING TILE
319	ROOM NUMBER NOT ASSIGNED TO ROOM					
320	SPECIAL PROJECTS LAB	CERAMIC GRANULAR	4" CERAMIC GRANULAR	PAINTED GYP. BOARD	10'-0"	2x2 ACCOUSTICAL CEILING
320A	STORAGE	CERAMIC GRANULAR	4" CERAMIC GRANULAR	PAINTED GYP. BOARD	8'-0"	2x2 ACCOUSTICAL CEILING
321	ROOM NUMBER NOT ASSIGNED TO ROOM					
322	SPECIAL PROJECTS LAB	CERAMIC GRANULAR	4" CERAMIC GRANULAR	PAINTED GYP. BOARD	10'-0"	2x2 ACCOUSTICAL CEILING
322A	STORAGE	CERAMIC GRANULAR	4" CERAMIC GRANULAR	PAINTED GYP. BOARD	8'-0"	2x2 ACCOUSTICAL CEILING
323	ELECTRICAL	EXPOSED CONCRETE	4" RUBBER COVE	PAINTED GYP. BOARD	—	OPEN TO STRUCTURE
324	AUTO TUTORIAL	CERAMIC GRANULAR	4" CERAMIC GRANULAR	PAINTED GYP. BOARD & CERAMIC TILE (3)	10'-0"	2x2 ACCOUSTICAL CEILING
324A	I.C.U.	CERAMIC GRANULAR	4" CERAMIC GRANULAR	PAINTED GYP. BOARD	10'-0"	2x2 ACCOUSTICAL CEILING
324B	MATERNITY	CERAMIC GRANULAR	4" CERAMIC GRANULAR	PAINTED GYP. BOARD	10'-0"	2x2 ACCOUSTICAL CEILING
324C	SMALL EQUIPMENT STORAGE	CERAMIC GRANULAR	4" CERAMIC GRANULAR	PAINTED GYP. BOARD	10'-0"	2x2 ACCOUSTICAL CEILING
324D	LARGE EQUIPMENT STORAGE	EXPOSED CONCRETE	4" RUBBER COVE	PAINTED GYP. BOARD	10'-0"	2x2 ACCOUSTICAL CEILING
325	HEALTH ASSESSMENT LABORATORY	CERAMIC GRANULAR	4" CERAMIC GRANULAR	PAINTED GYP. BOARD	10'-0"	2x2 ACCOUSTICAL CEILING
325A	STORAGE	CERAMIC GRANULAR	4" CERAMIC GRANULAR	PAINTED GYP. BOARD	8'-0"	2x2 ACCOUSTICAL CEILING
326	ROOM NUMBER NOT ASSIGNED TO ROOM					
327	I.T.	CERAMIC GRANULAR	4" CERAMIC GRANULAR	PAINTED GYP. BOARD	—	OPEN TO STRUCTURE
328	ROOM NUMBER NOT ASSIGNED TO ROOM					
329	HEALTH ASSESSMENT LABORATORY	CERAMIC GRANULAR	6" CERAMIC GRANULAR	PAINTED GYP. BOARD	10'-0"	2x2 ACCOUSTICAL CEILING
329A	STORAGE	CERAMIC GRANULAR	4" CERAMIC GRANULAR	PAINTED GYP. BOARD	8'-0"	2x2 ACCOUSTICAL CEILING
330	ROOM NUMBER NOT ASSIGNED TO ROOM					
331	LECTURE CLASSROOM	CARPET	4" RUBBER COVE	PAINTED GYP. BOARD	10'-0"	2x2 ACCOUSTICAL CEILING
332	MEN	CERAMIC GRANULAR	6" CERAMIC GRANULAR	PAINTED GYP. BOARD	9'-0"	2x2 ACCOUSTICAL CEILING (6)
333	ROOM NUMBER NOT ASSIGNED TO ROOM					
334	CHASE	EXPOSED CONCRETE	NONE	EXPOSED STUDS	—	OPEN TO STRUCTURE
335	ROOM NUMBER NOT ASSIGNED TO ROOM					
336	WOMEN	CERAMIC GRANULAR	6" CERAMIC GRANULAR	PAINTED GYP. BOARD	9'-0"	2x2 ACCOUSTICAL CEILING (6)

REMARKS

1. CARPET TO BE ANTI STATIC
2. PORCELAIN TILE FLOOR TO HAVE PATTERN SEE SHEET A007 FOR PATTERN
3. NORTH WALL TO RECIEVE TILE WAINSCOT UP WALL 7'-4" A.F.F. SEE SHEET A007.1
4. JANITOR SINK TO HAVE CEREMIC TILE WAINSCOT BEHIND SINK UP WALL 4'-0"A.F.F. SEE SHEET A600
5. WALLS TO RECIEVE CEREMIC TILE WAINSCOT UP TO 7'-0" A.F.F. SEE SHEET A600
6. PAINTED GYPSUM BOARD FURR DOWNS. SEE REFLECTED CEILING PLANS.
7. METAL LINEAR CEILING SYSTEM APPLIED TO WALLS AS SHOWN ON DRAWING
8. CLOUDS AS SHOWN ON REFELECTED CEILING PLAN
9. PROVIDE RUBBER STAIR TREAD AND RISER AT STAIRS
10. PROVIDE PORCELAIN TILE RISER AND TREADS W/ METAL STAIR NOSING AT STEPS
11. PROVIDE CARPET AT VERTICAL FACES OF PLATFORM AND SEATING RISERS

FINISH SCHEDULE - FIRST FLOOR

ROOM NO.	ROOM NAME	FLOOR	BASE	WALLS	CEILING HEIGHT	CEILING
AAV01	VESTIBULE	PORCELAIN TILE	4" PORCELAIN TILE	BRICK	10'-0"	SUSPENDED METAL CEILING
AAL01	LOBBY	PORCELAIN TILE (2)	4" PORCELAIN TILE	BRICK (7)	10'-0"	SUSPENDED METAL CEILING (8)
AAA01	ANTE	PORCELAIN TILE	4" PORCELAIN TILE	PAINTED GYP. BOARD	10'-0"	SUSPENDED METAL CEILING
AAC01	CORRIDOR	CERAMIC GRANULAR	4" CEREMIC GRANULAR	PAINTED GYP. BOARD	10'-0"	2x2 ACCOUSTICAL CEILING (6)
BBC01	CORRIDOR	CARPET	4" RUBBER COVE	PAINTED GYP. BOARD	10'-0"	2x2 ACCOUSTICAL CEILING (6)
CCC01	CORRIDOR	CARPET	4" RUBBER COVE	PAINTED GYP. BOARD	10'-0"	2x2 ACCOUSTICAL CEILING (6)
DDC01	CORRIDOR	CARPET	4" RUBBER COVE	PAINTED GYP. BOARD	10'-0"	2x2 ACCOUSTICAL CEILING (6)
EEC01	CORRIDOR	CARPET	4" RUBBER COVE	PAINTED GYP. BOARD	10'-0"	2x2 ACCOUSTICAL CEILING (6)
FFC01	CORRIDOR	CERAMIC GRANULAR	4" CEREMIC GRANULAR	PAINTED GYP. BOARD	10'-0"	2x2 ACCOUSTICAL CEILING (6)
AAS01	STAIR	PORCELAIN TILE (10)	PAINTED STEEL STRINGER	BRICK	VARIES	LINEAR METAL CEILING
CCS01	STAIR	CERAMIC GRANULAR (9)	4" CEREMIC GRANULAR	PAINTED GYP. BOARD	VARIES	PAINTED GYPSUM BOARD
DDS01	STAIR	CERAMIC GRANULAR (9)	4" CEREMIC GRANULAR	PAINTED GYP. BOARD	VARIES	PAINTED GYPSUM BOARD
AAE01	ELEVATOR (SHAFT)	EXPOSED CONCRETE	—	EXPOSED CONCRETE	—	
BBE01	ELEVATOR (SHAFT)	EXPOSED CONCRETE	—	EXPOSED CONCRETE	—	
	ELEVATOR A (CAB)	PORCELAIN TILE	4" PORCELAIN TILE			
	ELEVATOR B (CAB)	PORCELAIN TILE	4" PORCELAIN TILE			
101	CLIENT WAITING	PORCELAIN TILE	4" PORCELAIN TILE	BRICK & PAINTED GYP. BOARD	10'-0"	2x2 ACCOUSTICAL CEILING (6)
102	STUDENT WORKROOM	CERAMIC GRANULAR	4" CERAMIC GRANULAR	PAINTED GYP. BOARD	10'-0"	2x2 ACCOUSTICAL CEILING
102A	STORAGE	PORCELAIN TILE	4" PORCELAIN TILE	BRICK & PAINTED GYP. BOARD	8'-0"	2x2 ACCOUSTICAL CEILING
103	CONSULTATION	CARPET	4" RUBBER COVE	PAINTED GYP. BOARD	9'-0"	2x2 ACCOUSTICAL CEILING
104	ROOM NUMBER NOT ASSIGNED TO ROOM					
105	DIRECTORS OFFICE	CARPET	4" RUBBER COVE	PAINTED GYP. BOARD	10'-0"	2x2 ACCOUSTICAL CEILING
106	THERAPY / TREATMENT ROOM	CARPET	4" RUBBER COVE	PAINTED GYP. BOARD	10'-0"	2x2 ACCOUSTICAL CEILING
107	THERAPY / TREATMENT ROOM	CARPET	4" RUBBER COVE	PAINTED GYP. BOARD	10'-0"	2x2 ACCOUSTICAL CEILING
108	OBSERVATION	CARPET	4" RUBBER COVE	PAINTED GYP. BOARD	8'-0"	2x2 ACCOUSTICAL CEILING
109	OBSERVATION	CARPET	4" RUBBER COVE	PAINTED GYP. BOARD	8'-0"	2x2 ACCOUSTICAL CEILING
110	OBSERVATION	CARPET	4" RUBBER COVE	PAINTED GYP. BOARD	8'-0"	2x2 ACCOUSTICAL CEILING
111	OBSERVATION	CARPET	4" RUBBER COVE	PAINTED GYP. BOARD	8'-0"	2x2 ACCOUSTICAL CEILING
112	THERAPY / TREATMENT ROOM	CARPET	4" RUBBER COVE	PAINTED GYP. BOARD	10'-0"	2x2 ACCOUSTICAL CEILING
113	THERAPY / TREATMENT ROOM	CARPET	4" RUBBER COVE	PAINTED GYP. BOARD	10'-0"	2x2 ACCOUSTICAL CEILING
114	ROOM NUMBER NOT ASSIGNED TO ROOM					
115	THERAPY / TREATMENT ROOM	CARPET	4" RUBBER COVE	PAINTED GYP. BOARD	10'-0"	2x2 ACCOUSTICAL CEILING
116	ROOM NUMBER NOT ASSIGNED TO ROOM					
117	OBSERVATION	CARPET	4" RUBBER COVE	PAINTED GYP. BOARD	8'-0"	2x2 ACCOUSTICAL CEILING
118	ROOM NUMBER NOT ASSIGNED TO ROOM					
119	OBSERVATION	CARPET	4" RUBBER COVE	PAINTED GYP. BOARD	8'-0"	2x2 ACCOUSTICAL CEILING
120	ROOM NUMBER NOT ASSIGNED TO ROOM					
121	AURAL REHAB LAB	CARPET	4" RUBBER COVE	PAINTED GYP. BOARD	10'-0"	2x2 ACCOUSTICAL CEILING
122	AUDIOLOGY LAB	CARPET	4" RUBBER COVE	PAINTED GYP. BOARD	10'-0"	2x2 ACCOUSTICAL CEILING
122A	STORAGE	CARPET	4" RUBBER COVE	PAINTED GYP. BOARD	8'-0"	2x2 ACCOUSTICAL CEILING
123	ROOM NUMBER NOT ASSIGNED TO ROOM					
124	PEDIATRIC LANGUAGE LAB	CERAMIC GRANULAR	6" CERAMIC GRANULAR	PAINTED GYP. BOARD	10'-0"	2x2 ACCOUSTICAL CEILING
124A	TOILET	CERAMIC GRANULAR	6" CERAMIC GRANULAR	PAINTED GYP. BOARD	8'-0"	2x2 ACCOUSTICAL CEILING
125	ROOM NUMBER NOT ASSIGNED TO ROOM					
126	GERIATRIC SPEECH / LANGUAGE LAB	CARPET	4" RUBBER COVE	PAINTED GYP. BOARD	10'-0"	2x2 ACCOUSTICAL CEILING
126A	STORAGE	CARPET	4" RUBBER COVE	PAINTED GYP. BOARD	8'-0"	2x2 ACCOUSTICAL CEILING
127	ARTICULATION LAB	CARPET	4" RUBBER COVE	PAINTED GYP. BOARD	10'-0"	2x2 ACCOUSTICAL CEILING
128	ACCENT REDUCTION LAB	CARPET	4" RUBBER COVE	PAINTED GYP. BOARD	10'-0"	2x2 ACCOUSTICAL CEILING
129	OBSERVATION	CARPET	4" RUBBER COVE	PAINTED GYP. BOARD	8'-0"	2x2 ACCOUSTICAL CEILING
130	OBSERVATION	CARPET	4" RUBBER COVE	PAINTED GYP. BOARD	8'-0"	2x2 ACCOUSTICAL CEILING
131	OBSERVATION	CARPET	4" RUBBER COVE	PAINTED GYP. BOARD	8'-0"	2x2 ACCOUSTICAL CEILING
132	OBSERVATION	CARPET	4" RUBBER COVE	PAINTED GYP. BOARD	8'-0"	2x2 ACCOUSTICAL CEILING
133	THERAPY / TREATMENT ROOM	CARPET	4" RUBBER COVE	PAINTED GYP. BOARD	10'-0"	2x2 ACCOUSTICAL CEILING
134	THERAPY / TREATMENT ROOM	CARPET	4" RUBBER COVE	PAINTED GYP. BOARD	10'-0"	2x2 ACCOUSTICAL CEILING
135	ROOM NUMBER NOT ASSIGNED TO ROOM					
136	THERAPY / TREATMENT ROOM			PAINTED GYP. BOARD	10'-0"	2x2 ACCOUSTICAL CEILING
137	ROOM NUMBER NOT ASSIGNED TO ROOM					
138	OBSERVATION	CARPET	4" RUBBER COVE	PAINTED GYP. BOARD	8'-0"	2x2 ACCOUSTICAL CEILING
139	ROOM NUMBER NOT ASSIGNED TO ROOM					
140	OBSERVATION	CARPET	4" RUBBER COVE	PAINTED GYP. BOARD	8'-0"	2x2 ACCOUSTICAL CEILING
141	ROOM NUMBER NOT ASSIGNED TO ROOM					
142	THERAPY / TREATMENT ROOM	CARPET	4" RUBBER COVE	PAINTED GYP. BOARD	10'-0"	2x2 ACCOUSTICAL CEILING
143	ROOM NUMBER NOT ASSIGNED TO ROOM					
144	REMOTE VIDEO OBSERVATION ROOM	CARPET	4" RUBBER COVE	PAINTED GYP. BOARD	10'-0"	2x2 ACCOUSTICAL CEILING
145	FILES / RECORDS	CERAMIC GRANULAR	4" CERAMIC GRANULAR	PAINTED GYP. BOARD	9'-0"	2x2 ACCOUSTICAL CEILING
146	LIBRARY	CERAMIC GRANULAR	4" CERAMIC GRANULAR	PAINTED GYP. BOARD	10'-0"	2x2 ACCOUSTICAL CEILING (6)
147	WORK / COPY / RECEPTION	CERAMIC GRANULAR	4" CERAMIC GRANULAR	PAINTED GYP. BOARD	10'-0"	2x2 ACCOUSTICAL CEILING (6)
148	ROOM NUMBER NOT ASSIGNED TO ROOM					
149	ELECTRICAL	EXPOSED CONCRETE	4" RUBBER COVE	PAINTED GYP. BOARD	—	OPEN TO STRUCTURE
150	ROOM NUMBER NOT ASSIGNED TO ROOM					
151	COMMUNITY EDUCATION CENTER	CERAMIC GRANULAR	4" CERAMIC GRANULAR	PAINTED GYP. BOARD	10'-0"	2x2 ACCOUSTICAL CEILING
151A	STORAGE	CERAMIC GRANULAR	4" CERAMIC GRANULAR	PAINTED GYP. BOARD	8'-0"	2x2 ACCOUSTICAL CEILING
152	ROOM NUMBER NOT ASSIGNED TO ROOM					
153	FUNCTIONAL REHABILITATION CENTER	CERAMIC GRANULAR	4" CERAMIC GRANULAR	PAINTED GYP. BOARD	10'-0"	2x2 ACCOUSTICAL CEILING
154	ROOM NUMBER NOT ASSIGNED TO ROOM					
155	I.T.	CERAMIC GRANULAR	4" CERAMIC GRANULAR	PAINTED GYP. BOARD	8'-0"	2x2 ACCOUSTICAL CEILING
156	ROOM NUMBER NOT ASSIGNED TO ROOM					
157	THERAPUTIC EXERCISE MOTOR SKILLS LAB	CERAMIC GRANULAR	4" CERAMIC GRANULAR	PAINTED GYP. BOARD	10'-0"	2x2 ACCOUSTICAL CEILING
157A	HALL	CERAMIC GRANULAR	4" CERAMIC GRANULAR	PAINTED GYP. BOARD	8'-0"	2x2 ACCOUSTICAL CEILING
157B	STORAGE	CERAMIC GRANULAR	4" CERAMIC GRANULAR	PAINTED GYP. BOARD	8'-0"	2x2 ACCOUSTICAL CEILING (6)
158	MEN	CERAMIC GRANULAR	6" CERAMIC GRANULAR	PAINTED GYP. BOARD	9'-0"	2x2 ACCOUSTICAL CEILING
159	ROOM NUMBER NOT ASSIGNED TO ROOM					
160	CHASE	EXPOSED CONCRETE	NONE	EXPOSED STUDS	—	OPEN TO STRUCTURE
161	ROOM NUMBER NOT ASSIGNED TO ROOM					
162	WOMEN	CERAMIC GRANULAR	6" CERAMIC GRANULAR	PAINTED GYP. BOARD	9'-0"	2x2 ACCOUSTICAL CEILING (6)
163	ROOM NUMBER NOT ASSIGNED TO ROOM					
164	FAMILY RESTROOM	PORCELAIN TILE	6" PORCELAIN TILE	PAINTED GYP. BOARD	9'-0"	2x2 ACCOUSTICAL CEILING (6)
165	ROOM NUMBER NOT ASSIGNED TO ROOM					
166	HOUSEKEEPING	EXPOSED CONCRETE	4" RUBBER COVE	PAINTED GYP. BOARD (4)	8'-0"	2x2 MOISTURE RESISTANT SUSP. CEILING TILE
167	ROOM NUMBER NOT ASSIGNED TO ROOM					
168	ELEVATOR EQUIPMENT	EXPOSED CONCRETE	4" RUBBER COVE	PAINTED GYP. BOARD	—	OPEN TO STRUCTURE
169	ROOM NUMBER NOT ASSIGNED TO ROOM					
170	OFFICE	CARPET	4" RUBBER COVE	PAINTED GYP. BOARD	10'-0"	2x2 ACCOUSTICAL CEILING
171	RESEARCH LAB	CERAMIC GRANULAR	4" CERAMIC GRANULAR	PAINTED GYP. BOARD	10'-0"	2x2 ACCOUSTICAL CEILING
171A	STORAGE	CERAMIC GRANULAR	4" CERAMIC GRANULAR	PAINTED GYP. BOARD	8'-0"	2x2 ACCOUSTICAL CEILING
172	ROOM NUMBER NOT ASSIGNED TO ROOM					
173	I.T.	CERAMIC GRANULAR	4" CERAMIC GRANULAR	PAINTED GYP. BOARD	—	OPEN TO STRUCTURE
174	ROOM NUMBER NOT ASSIGNED TO ROOM					
175	RESEARCH LAB	CERAMIC GRANULAR	4" CERAMIC GRANULAR	PAINTED GYP. BOARD	10'-0"	2x2 ACCOUSTICAL CEILING
175A	HALL	CERAMIC GRANULAR	4" CERAMIC GRANULAR	PAINTED GYP. BOARD	8'-0"	2x2 ACCOUSTICAL CEILING
175B	STORAGE	CERAMIC GRANULAR	4" CERAMIC GRANULAR	PAINTED GYP. BOARD	8'-0"	2x2 ACCOUSTICAL CEILING
176	STORAGE	CERAMIC GRANULAR	4" CERAMIC GRANULAR	PAINTED GYP. BOARD	8'-0"	2x2 ACCOUSTICAL CEILING
177	RESEARCH LAB	CERAMIC GRANULAR	4" CERAMIC GRANULAR	PAINTED GYP. BOARD	10'-0"	2x2 ACCOUSTICAL CEILING
177A	STORAGE	CERAMIC GRANULAR	4" CERAMIC GRANULAR	PAINTED GYP. BOARD	8'-0"	2x2 ACCOUSTICAL CEILING
178	OFFICE	CARPET	4" RUBBER COVE	PAINTED GYP. BOARD	10'-0"	2x2 ACCOUSTICAL CEILING
179	TOILET	CERAMIC GRANULAR	6" CERAMIC GRANULAR	PAINTED GYP. BOARD	8'-0"	2x2 ACCOUSTICAL CEILING
179A	ADA SHOWER	2x2 CERAMIC TILE	4" CERAMIC TILE	PAINTED WATER RESISTANT GYP. BOARD & 4" CERAMIC TILE (5)	8'-0"	PAINTED WATER RESISTANT GYP. BD.
179B	DRESSING	CERAMIC GRANULAR	6" CERAMIC GRANULAR	PAINTED WATER RESISTANT GYP. BOARD & 4" CERAMIC TILE	8'-0"	PAINTED WATER RESISTANT GYP. BD.
180	OFFICE	CARPET	4" RUBBER COVE	PAINTED GYP. BOARD	10'-0"	2x2 ACCOUSTICAL CEILING
181	ROOM NUMBER NOT ASSIGNED TO ROOM					
182	MECHANICAL	EXPOSED CONCRETE	4" RUBBER COVE	PAINTED WATER RESISTANT GYP. BOARD	—	OPEN TO STRUCTURE
182A	ELECTRICAL	EXPOSED CONCRETE	4" RUBBER COVE	PAINTED GYP. BOARD	—	OPEN TO STRUCTURE

REMARKS

1. CARPET TO BE ANTI STATIC
2. PORCELAIN TILE FLOOR TO HAVE PATTERN SEE SHEET A007 FOR PATTERN
3. NORTH WALL TO RECIEVE TILE WAINSCOT UP WALL 7'-4" A.F.F. SEE SHEET A007.1
4. JANITOR SINK TO HAVE CEREMIC TILE WAINSCOT BEHIND SINK UP WALL 4'-0"A.F.F. SEE SHEET A600
5. WALLS TO RECIEVE CEREMIC TILE WAINSCOT UP TO 7'-0" A.F.F. SEE SHEET A600
6. PAINTED GYPSUM BOARD FURR DOWNS. SEE REFLECTED CEILING PLANS.
7. METAL LINEAR CEILING SYSTEM APPLIED TO WALLS AS SHOWN ON DRAWING
8. CLOUDS AS SHOWN ON REFELECTED CEILING PLAN
9. PROVIDE RUBBER STAIR TREAD AND RISER AT STAIRS
10. PROVIDE PORCELAIN TILE RISER AND TREADS W/ METAL STAIR NOSING AT STEPS
11. PROVIDE CARPET AT VERTICAL FACES OF PLATFORM AND SEATING RISERS

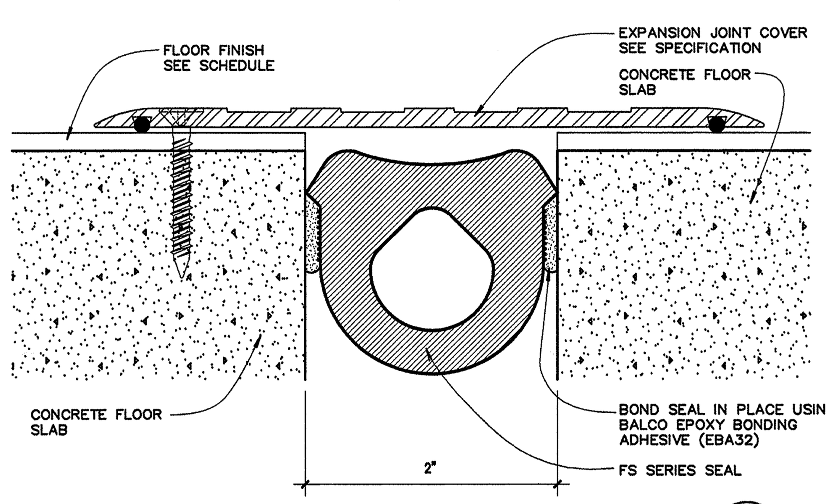

expansion joint detail (6)
FULL SCALE

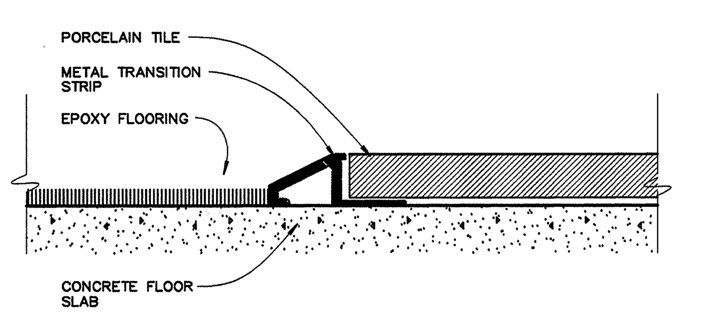

carpet / porcelain tile (5)
FULL SCALE

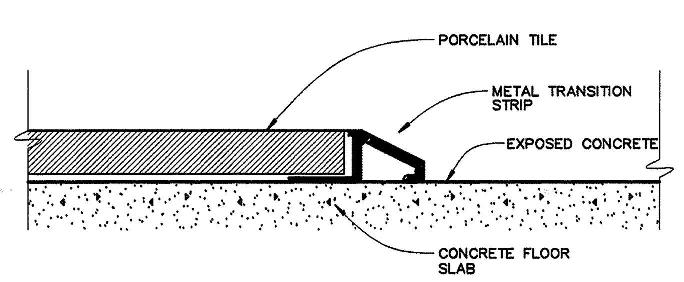

porcelain tile/ exposed concrete (4)
FULL SCALE

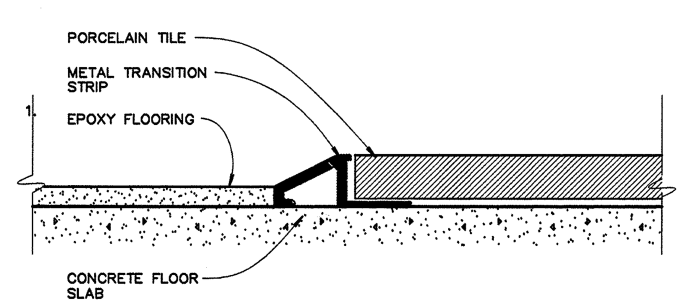

epoxy flooring/ porcelain tile (3)
FULL SCALE

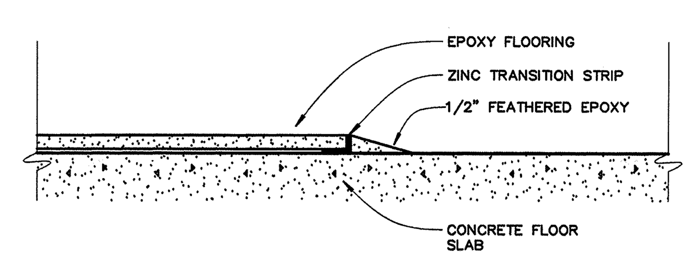

epoxy flooring / exposed concrete (2)
FULL SCALE

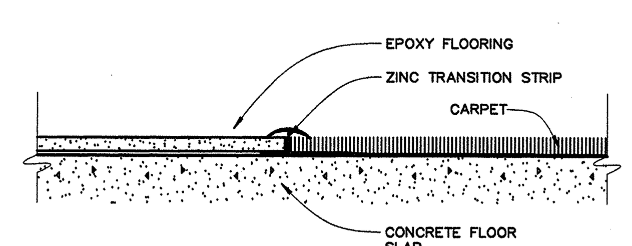

epoxy flooring / carpet (1)
FULL SCALE

transition details

ASU
ARKANSAS STATE UNIVERSITY

DONALD W. REYNOLDS CENTER FOR HEALTH SCIENCES
ARKANSAS STATE UNIVERSITY
JONESBORO, ARKANSAS

BRACKETT KRENNERICH architects
100 East Huntington, Suite D P.O. Box 1655 Jonesboro, Arkansas 72403-1655
870-932-0571 Fax 870-932-0975 www.bkarchts.com

Commission Number 12406

A006

Date: January 25, 2008

S:\Projects\Current\ASU Renoylds Center for Health Sciences\Working Drawings\A006.dwg, Tuesday, January 29, 2008 Steve

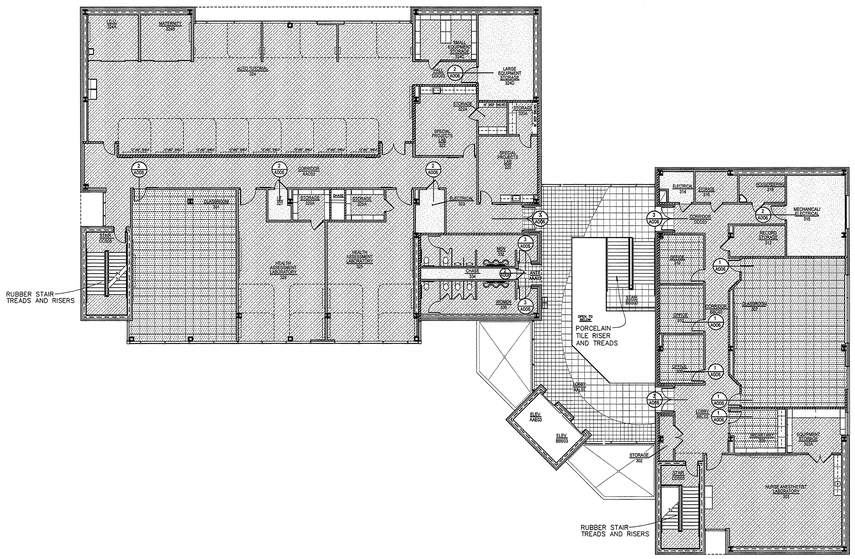

n **third floor finish plan**
SCALE: 1/16" = 1'-0"

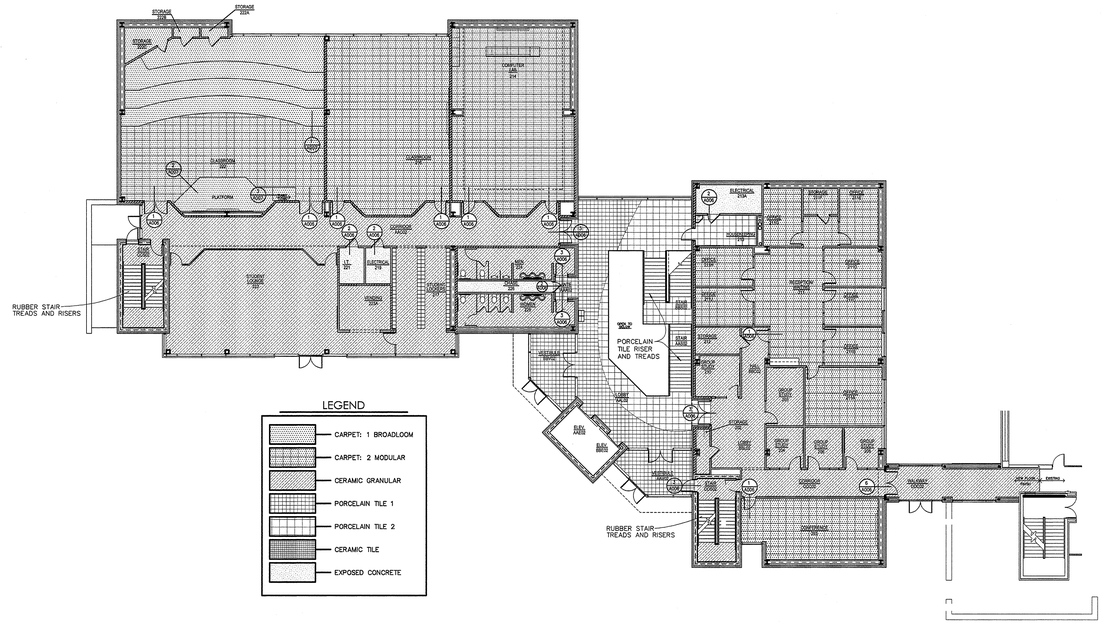

n **second floor finish plan**
SCALE: 1/16" = 1'-0"

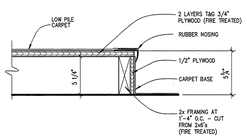

stage riser detail 2
SCALE: 1 1/2" = 1'-0"

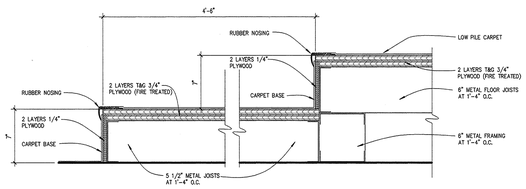

step riser detail 1
SCALE: 1 1/2" = 1'-0"

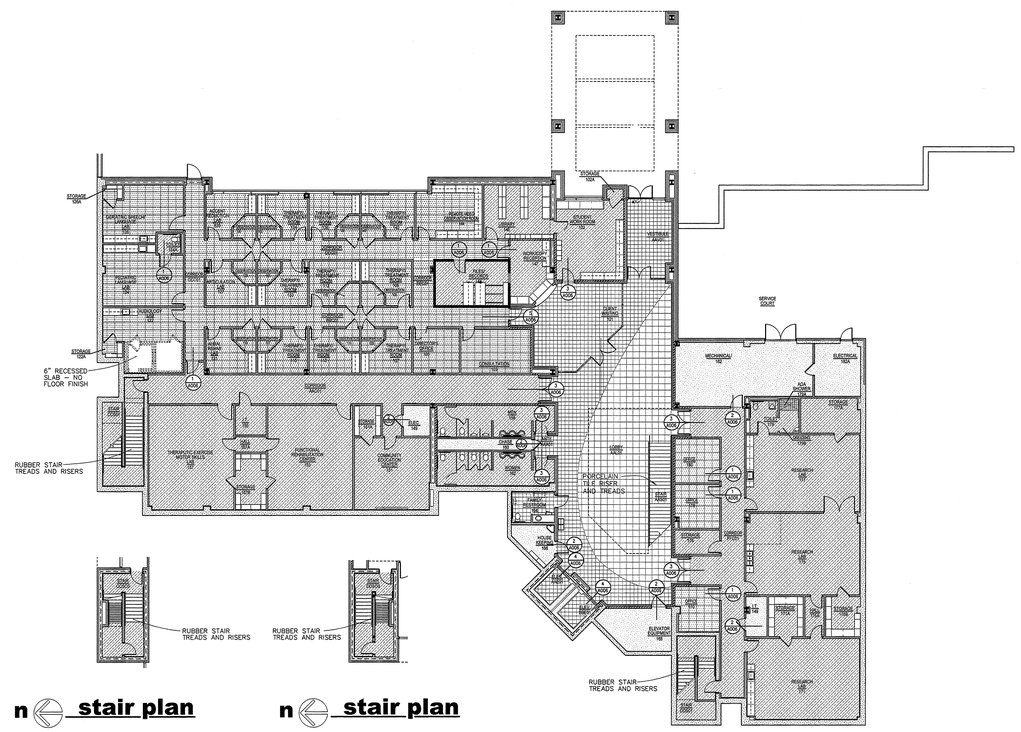

n **stair plan** n **stair plan**

n **first floor finish plan**
SCALE: 1/16" = 1'-0"

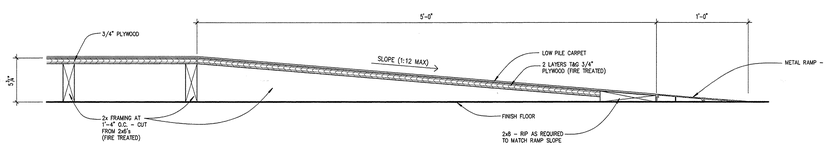

ramp detail 3
SCALE: 1 1/2" = 1'-0"

ARKANSAS STATE UNIVERSITY

DONALD W. REYNOLDS CENTER FOR HEALTH SCIENCES

ARKANSAS STATE UNIVERSITY
JONESBORO, ARKANSAS

BRACKETT KRENNERICH architects
100 East Huntington, Suite D · P.O. Box 1655 · Jonesboro, Arkansas 72403-1655
870-932-0571 Fax: 870-932-0975 www.bkarchts.com

Commission Number 12406
A007
Date: January 25, 2008

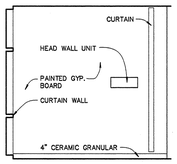

f.1

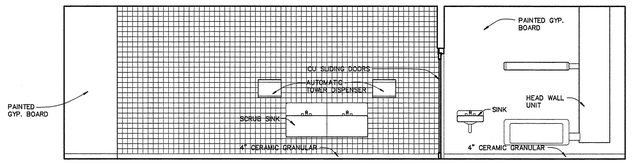

e.1

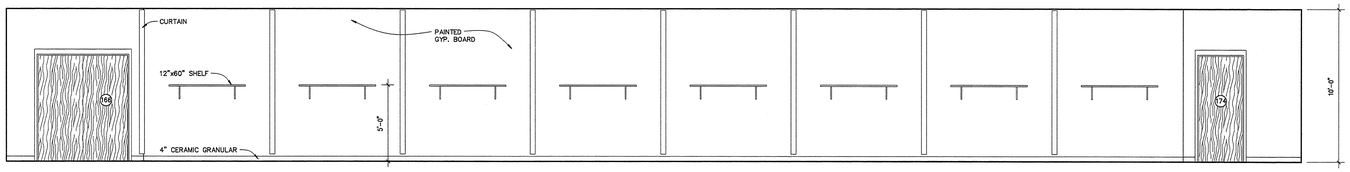

d.1

auto-tutorial 324

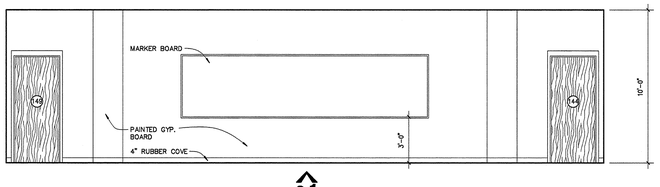

c.1

classroom 307

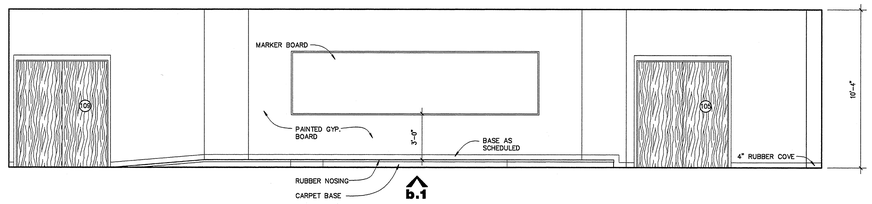

b.1

classroom 222

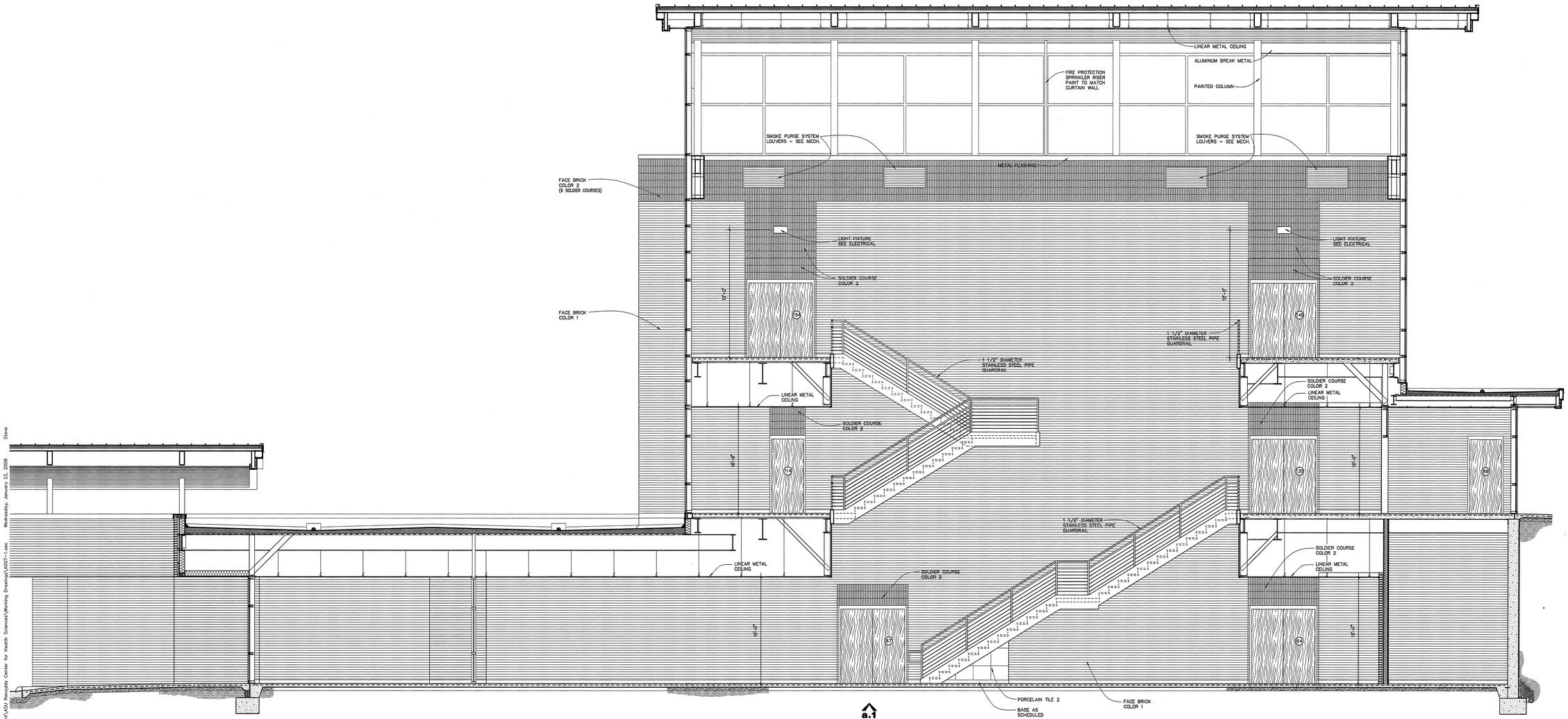

a.1

atrium lobby elevation

interior elevations

SCALE: 1/4" = 1'-0"

ASU ARKANSAS STATE UNIVERSITY

DONALD W. REYNOLDS CENTER FOR HEALTH SCIENCES

ARKANSAS STATE UNIVERSITY
JONESBORO, ARKANSAS

BRACKETT KRENNERICH architects
100 East Huntington, Suite D P.O. Box 1655 Jonesboro, Arkansas 72403-1655
870-932-0571 Fax 870-932-0975 www.bkarchts.com

Commission Number 12406

A007.1

Date: January 25, 2008

S:\Projects\Current\ASU Renegade Center for Health Sciences\Working Drawings\A007-1.dwg Wednesday, January 23, 2008 Steve

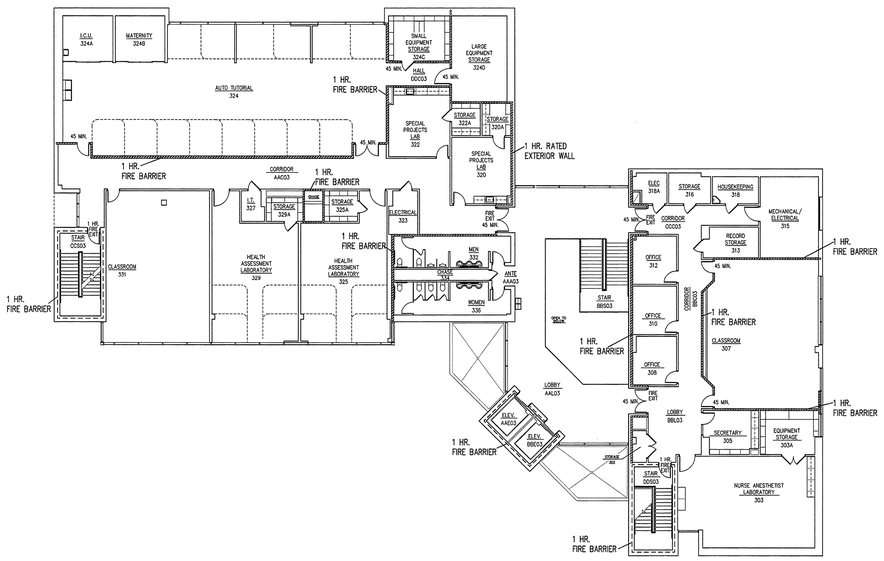

n third floor plan

SCALE: 1/16" = 1'-0"

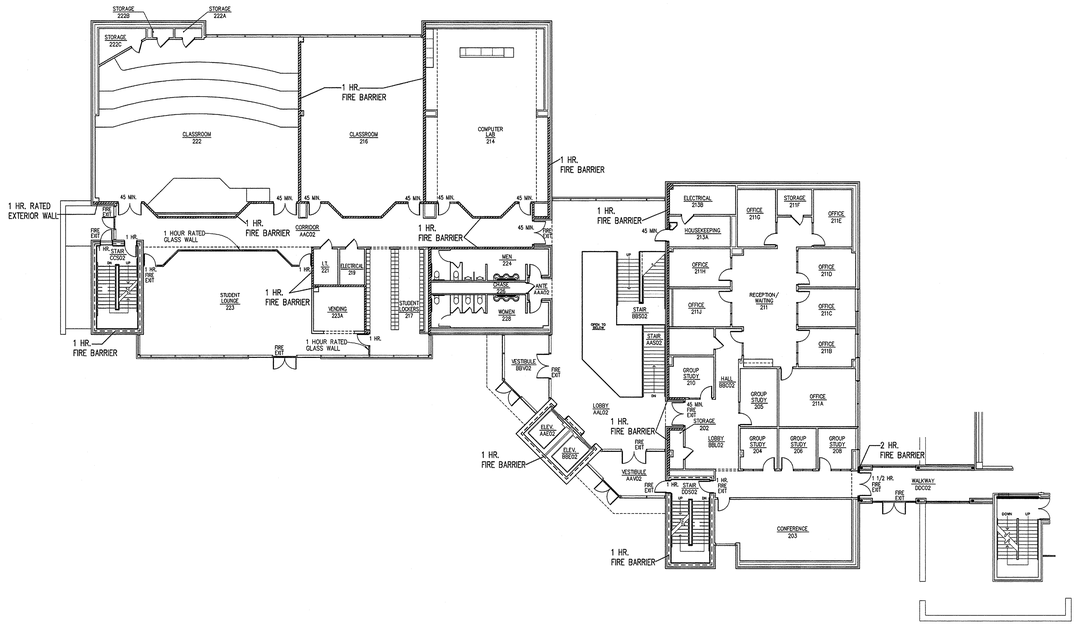

n second floor plan

SCALE: 1/16" = 1'-0"

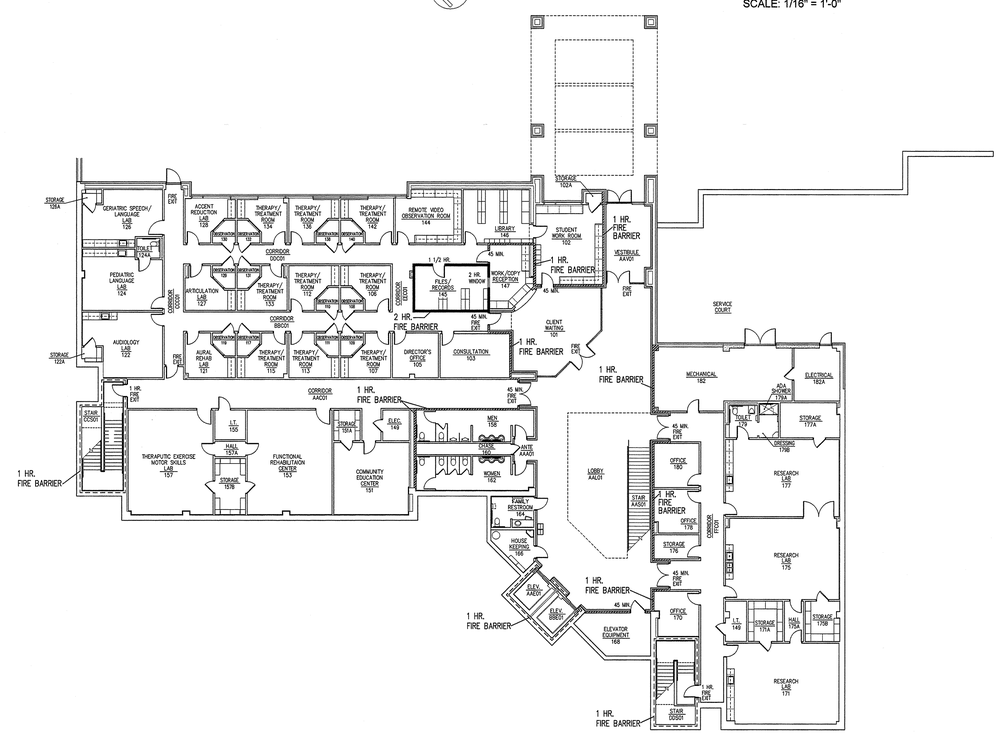

n first floor plan

SCALE: 1/16" = 1'-0"

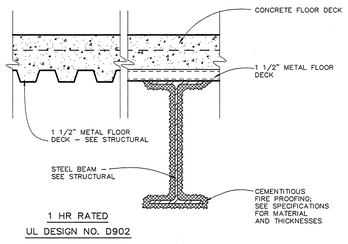

floor assembly detail

SCALE: 1 1/2" = 1'-0"

2

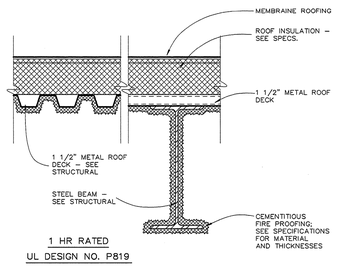

roof assembly detail

SCALE: 1 1/2" = 1'-0"

1

ASU
ARKANSAS STATE UNIVERSITY

DONALD W. REYNOLDS CENTER FOR HEALTH SCIENCES

ARKANSAS STATE UNIVERSITY

JONESBORO, ARKANSAS

BRACKETT KRENNERICH architects

100 East Huntington, Suite D P.O. Box 1655 Jonesboro, Arkansas 72403-1655
870-932-0571 Fax 870-932-0975 www.bkarchs.com

Commission Number 12406

A008

Date: January 25, 2008

S:\Projects\Current\A50 Renopda Center for Health Sciences\Working Drawings\A008LifeSafety.pwc Wednesday, January 23, 2008 Steve

fire rated expansion joint detail 23

(1 HOUR FIRE RATING) SCALE: 3" = 1'-0"

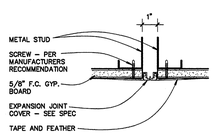

expansion joint detail 22

SCALE: 3" = 1'-0"

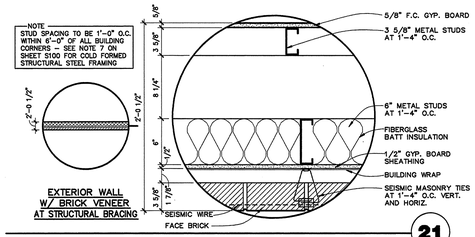

21

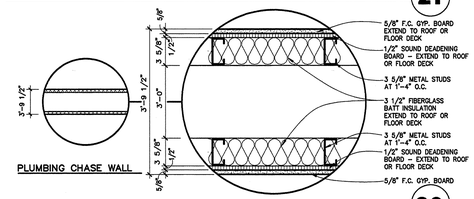

20

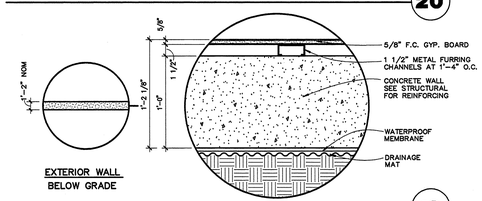

19

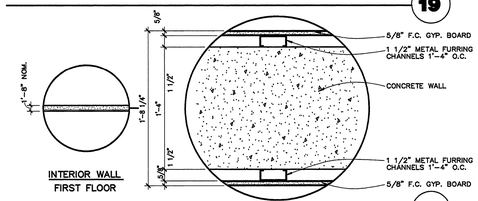

18

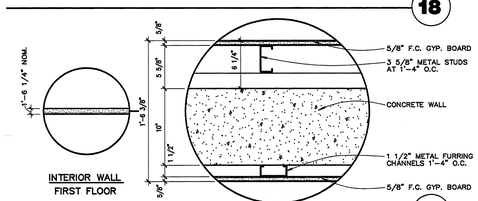

17

plan symbol **description**

SCALE: 1/8" = 1'-0" SCALE: 1 1/2" = 1'-0"

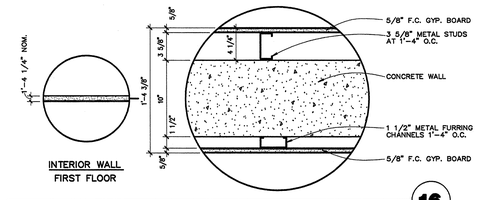

16

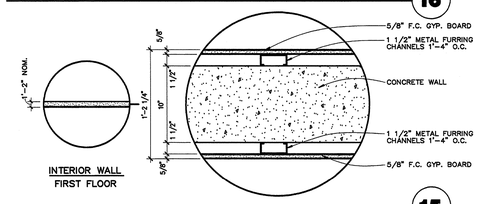

15

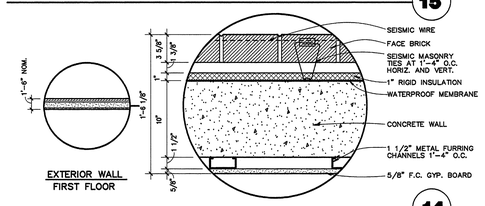

14

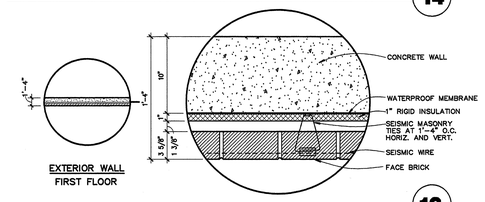

13

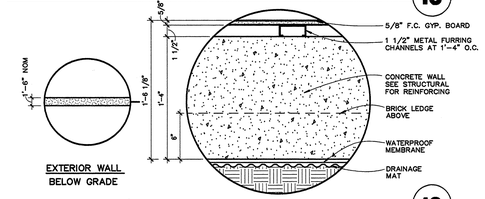

12

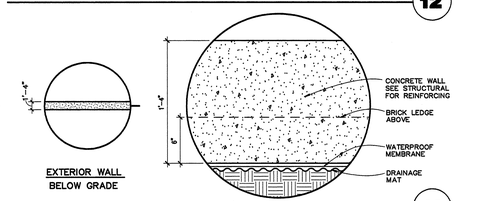

11

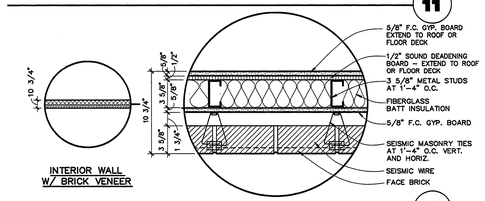

10

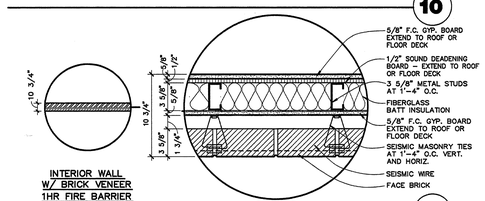

9

plan symbol **description**

SCALE: 1/8" = 1'-0" SCALE: 1 1/2" = 1'-0"

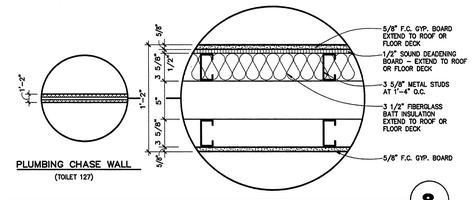

8

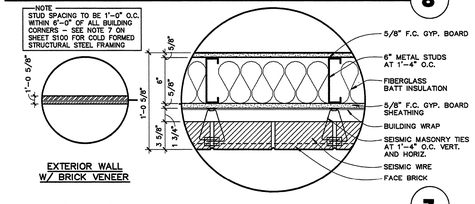

7

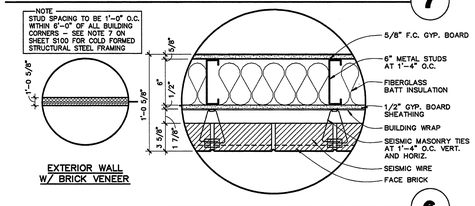

6

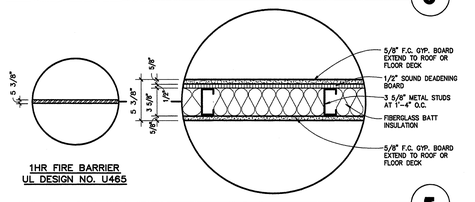

5

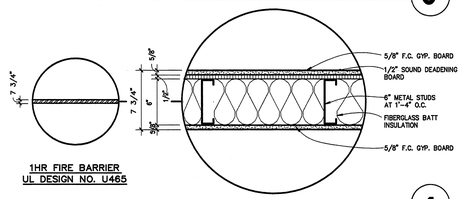

4

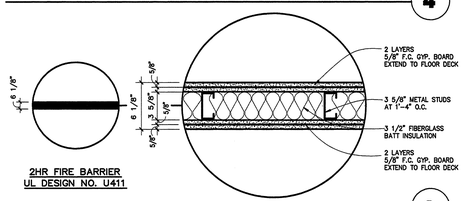

3

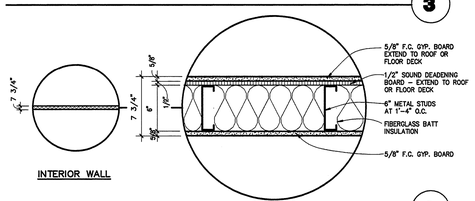

2

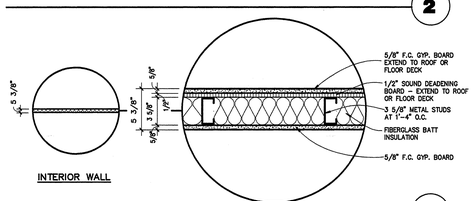

1

plan symbol **description**

SCALE: 1/8" = 1'-0" SCALE: 1 1/2" = 1'-0"

visual wall types

ARKANSAS STATE UNIVERSITY

DONALD W. REYNOLDS CENTER FOR HEALTH SCIENCES

ARKANSAS STATE UNIVERSITY

JONESBORO, ARKANSAS

BRACKETT KRENNERICH architects

100 East Huntington, Suite D P.O. Box 1655 Jonesboro, Arkansas 72403-1655

870-932-2571 Fax 870-932-0975 www.bkarchs.com

Commission Number 12406

A009

Date: January 25, 2008

ARKANSAS STATE UNIVERSITY

DONALD W. REYNOLDS CENTER FOR HEALTH SCIENCES

ARKANSAS STATE UNIVERSITY
JONESBORO, ARKANSAS

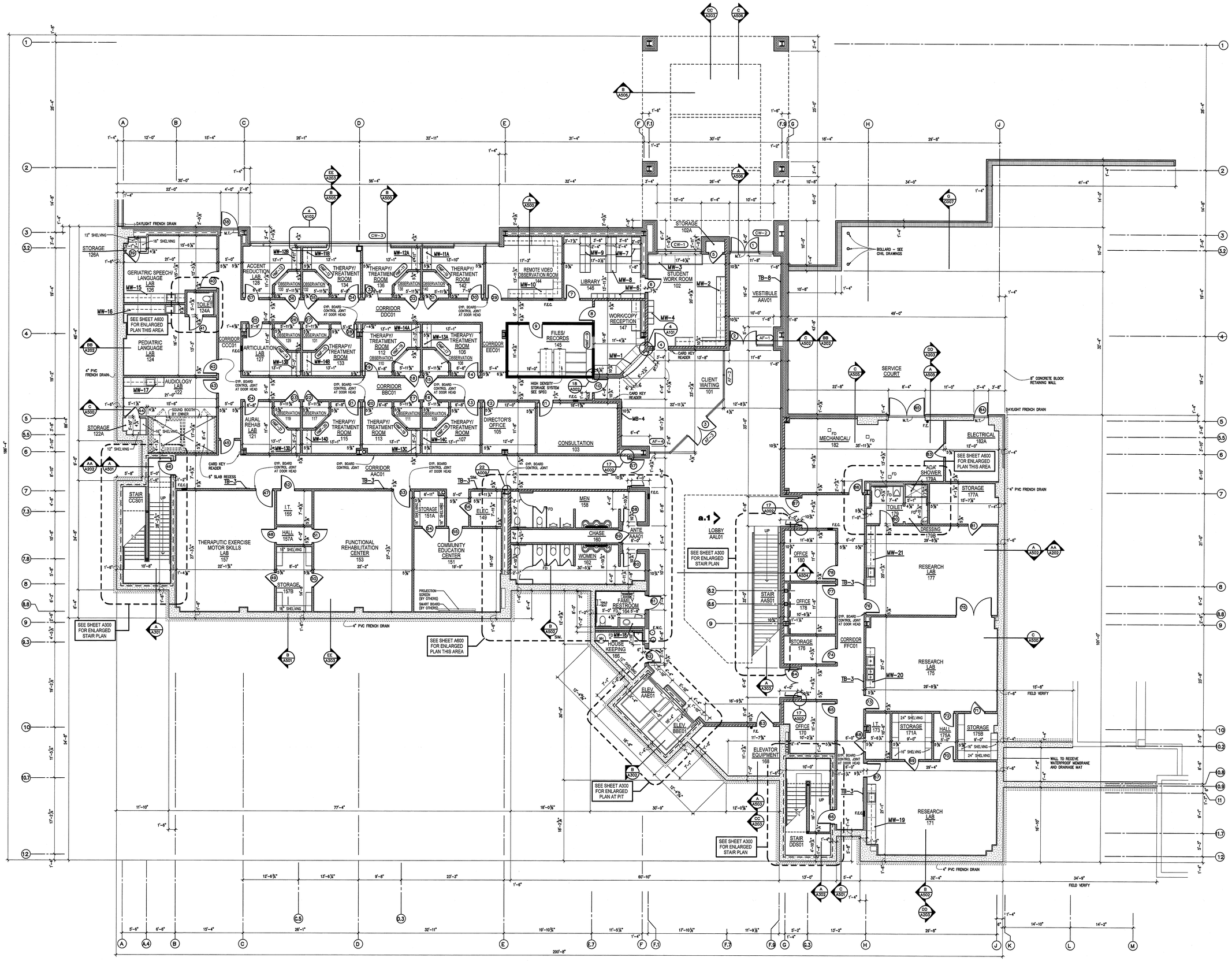

n first floor plan

SCALE: 1/8" = 1'-0"

BRACKETT KRENNERICH architects

100 East Huntington, Suite D P.O. Box 1655 Jonesboro, Arkansas 72403-1655
870-932-0571 Fax 870-932-0975 www.bkarchs.com

Commission Number 12406

A100

Date: January 25, 2008

S:\Projects\Current\ASU Renovate Center for Health Sciences\Working Drawings\A100.aec Wednesday, January 23, 2008 Steve

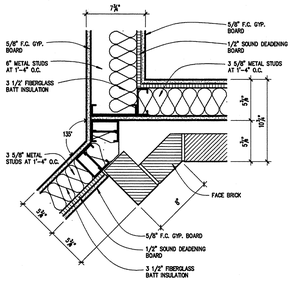

wall detail 4

SCALE: 1 1/2" = 1'-0"

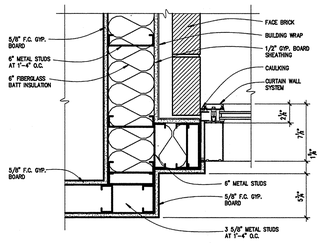

wall / frame detail 3

SCALE: 1 1/2" = 1'-0"

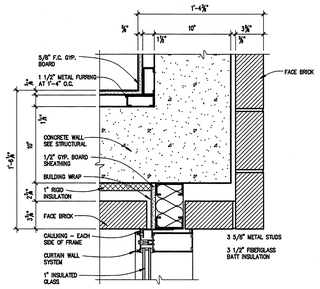

wall detail 2

SCALE: 1 1/2" = 1'-0"

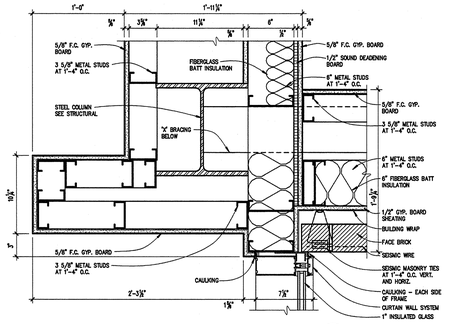

wall detail 1

SCALE: 1 1/2" = 1'-0"

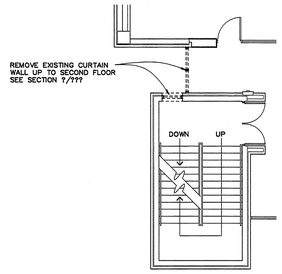

n **demolition plan**

SCALE: 1/8" = 1'-0"

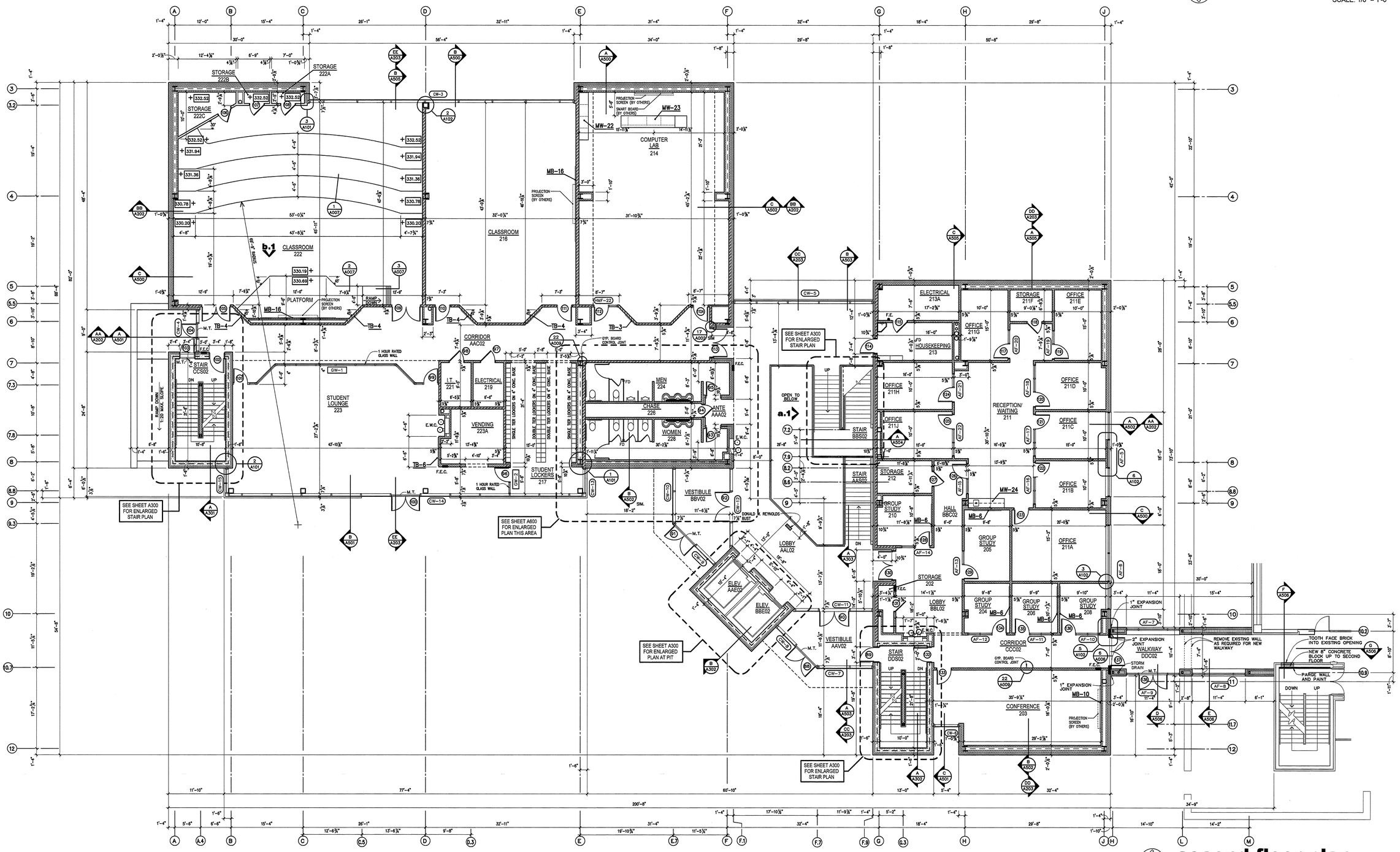

n **second floor plan**

SCALE: 1/8" = 1'-0"

ASU ARKANSAS STATE UNIVERSITY

DONALD W. REYNOLDS CENTER FOR HEALTH SCIENCES

ARKANSAS STATE UNIVERSITY

JONESBORO, ARKANSAS

BRACKETT KRENNERICH architects

100 East Huntington, Suite D P.O. Box 1655 Jonesboro, Arkansas 72403-1655
870-932-0975 Fax: 870-932-0671 www.bkarchts.com

Commission Number 12406

A101

Date: January 25, 2008

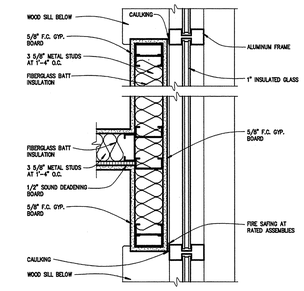

wall detail 6
SCALE: 1 1/2" = 1'-0"

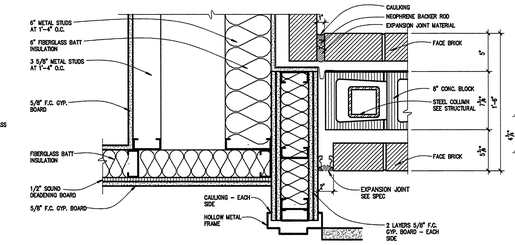

wall detail 5
SCALE: 1 1/2" = 1'-0"

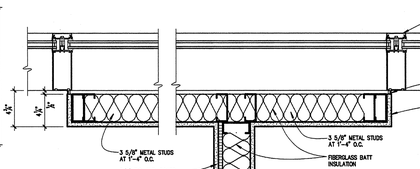

wall detail 4
SCALE: 1 1/2" = 1'-0"

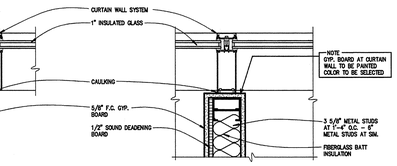

wall detail 3
SCALE: 1 1/2" = 1'-0"

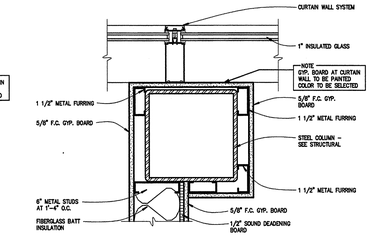

column detail 2
SCALE: 1 1/2" = 1'-0"

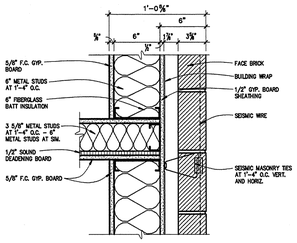

wall detail 1
SCALE: 1 1/2" = 1'-0"

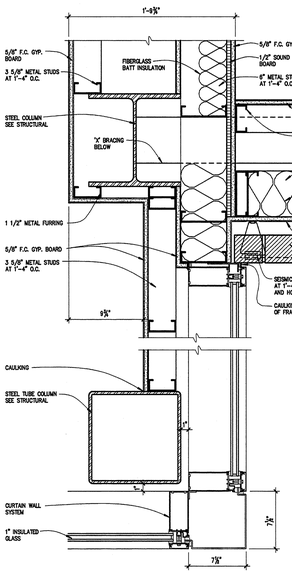

wall detail 7
SCALE: 1 1/2" = 1'-0"

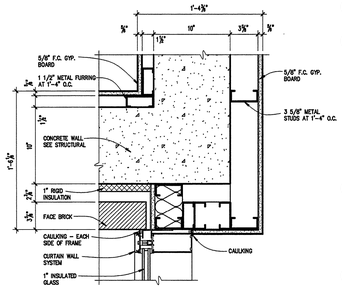

wall detail 8
SCALE: 1 1/2" = 1'-0"

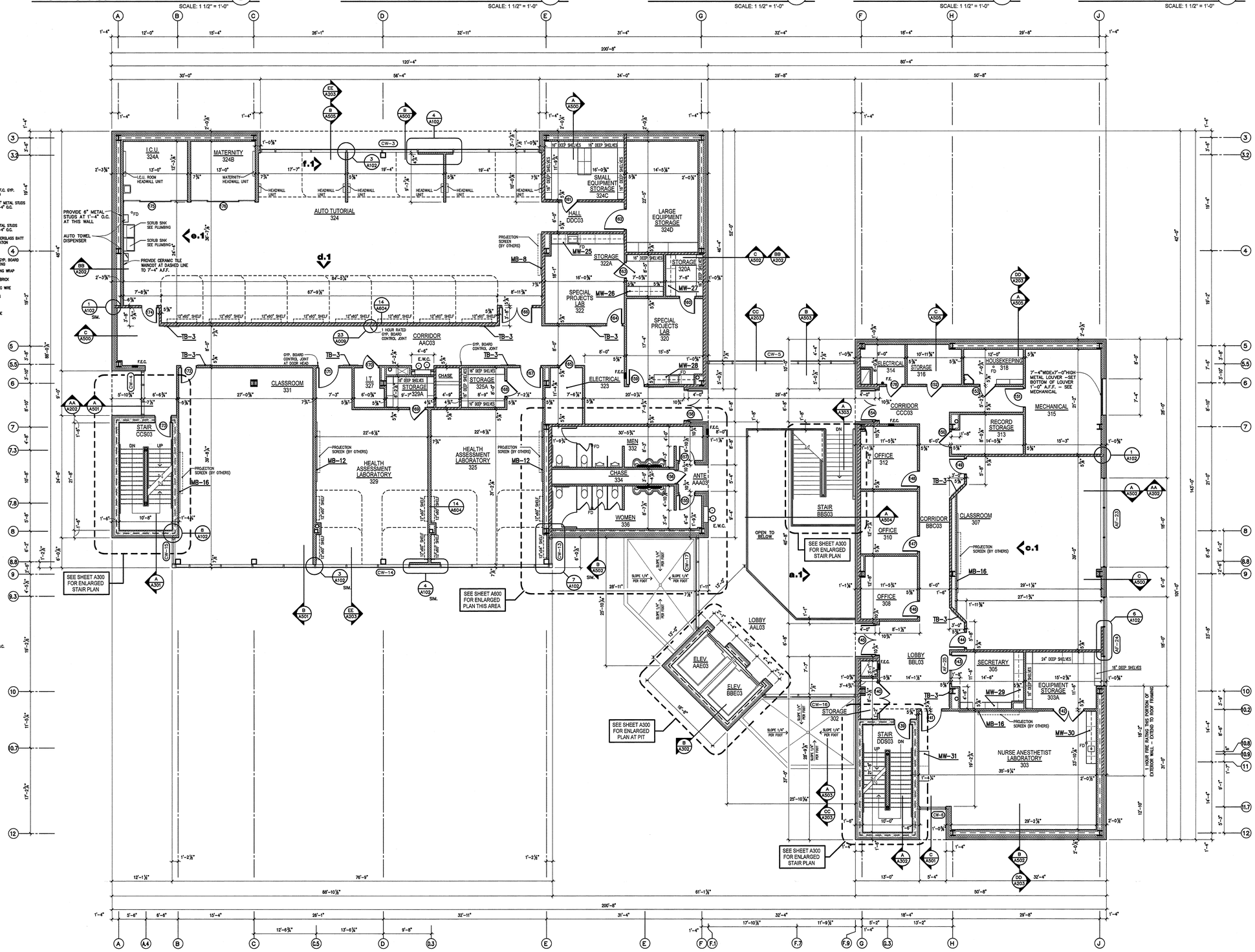

n third floor plan
SCALE: 1/8" = 1'-0"

ASU ARKANSAS STATE UNIVERSITY

DONALD W. REYNOLDS CENTER FOR HEALTH SCIENCES

ARKANSAS STATE UNIVERSITY
JONESBORO, ARKANSAS

BRACKETT KRENNERICH architects

100 East Huntington, Suite D P.O. Box 1655 Jonesboro, Arkansas 72403-1655
870-932-0571 Fax 870-932-0975 www.bkarchs.com

Commission Number 12406
A102
Date: January 25, 2008

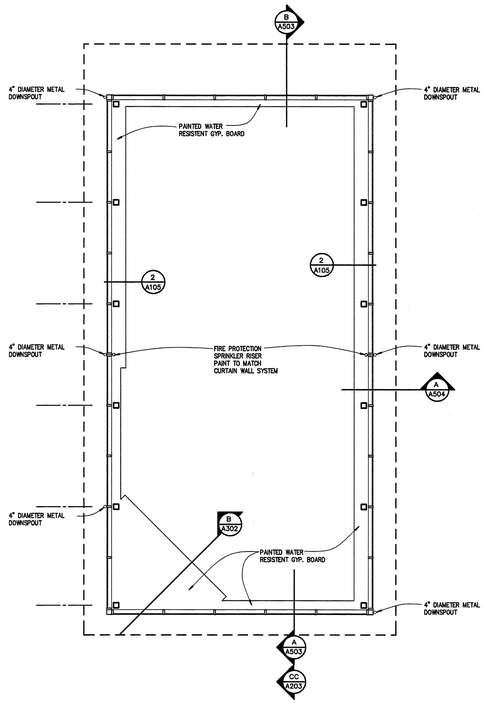

n clerestory plan
ATRIUM SCALE: 1/8" = 1'-0"

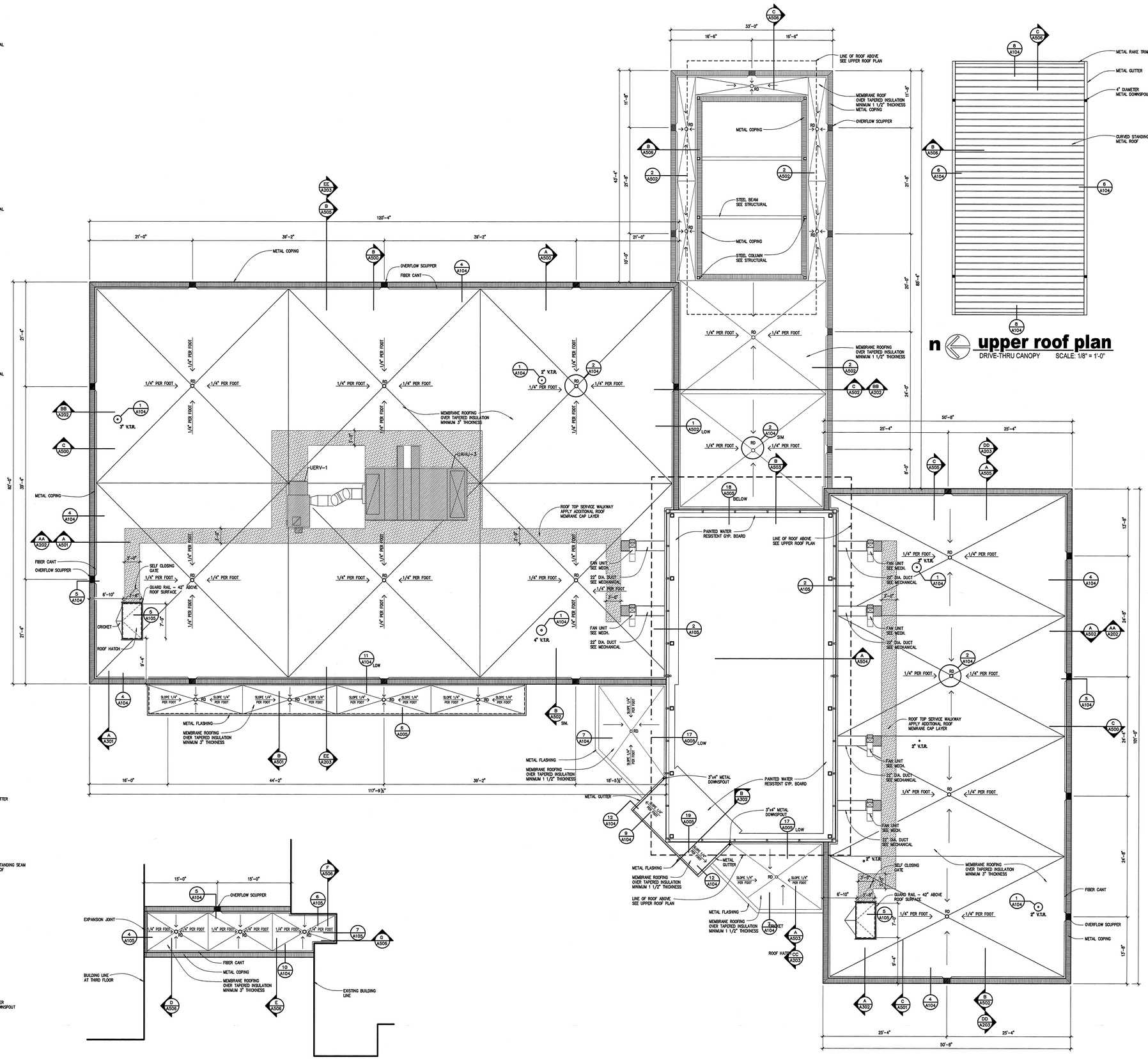

n upper roof plan
DRIVE-THRU CANOPY SCALE: 1/8" = 1'-0"

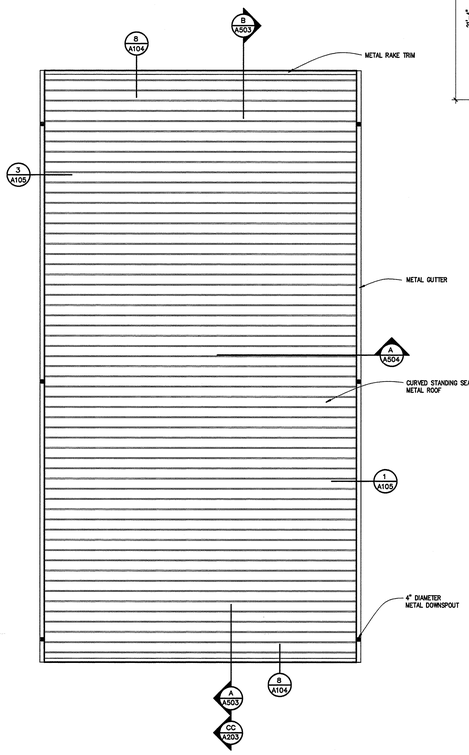

n upper roof plan
ATRIUM ROOF SCALE: 1/8" = 1'-0"

n lower roof plan
WALKWAY ROOF SCALE: 1/8" = 1'-0"

n roof plan
SCALE: 1/8" = 1'-0"

ASU ARKANSAS STATE UNIVERSITY

DONALD W. REYNOLDS CENTER FOR HEALTH SCIENCES
ARKANSAS STATE UNIVERSITY
JONESBORO, ARKANSAS

BRACKETT KRENNERICH architects
100 East Huntington, Suite D P.O. Box 1655 Jonesboro, Arkansas 72403-1655
870-932-0571 Fax:870-932-0975 www.bkarchts.com

Commission Number 12406
A103
Date: January 25, 2008

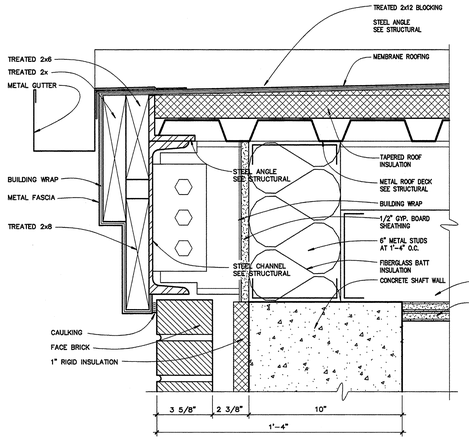

eave detail 12

SCALE: 3" = 1'-0"

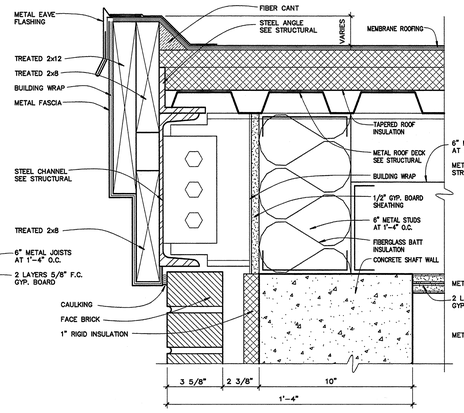

eave detail 9

SCALE: 3" = 1'-0"

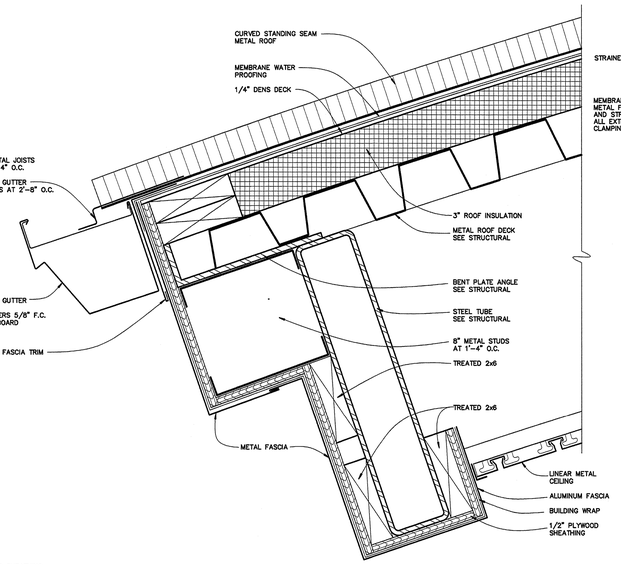

eave detail 6

SCALE: 3" = 1'-0"

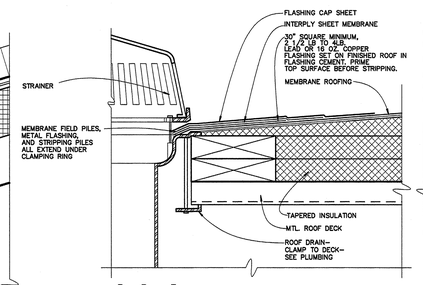

roof drain detail at metal deck 2

SIMILAR TO FIRESTONE DETAIL MB-D-1 SCALE: 3" = 1'-0"

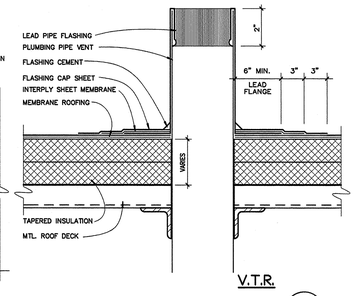

vent pipe detail 1

EQUAL TO FIRESTONE DETAIL MB-P-5 SCALE: 3" = 1'-0"

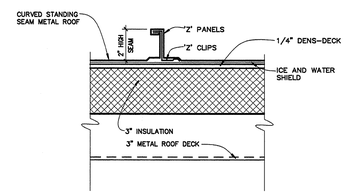

standing seam detail 3

SCALE: 3" = 1'-0"

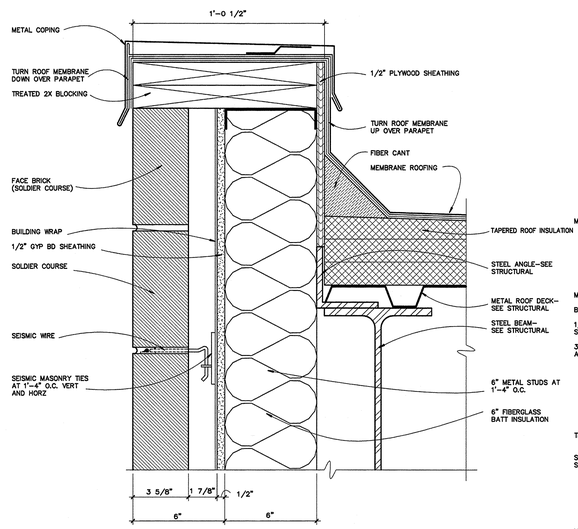

parapet detail 10

SCALE: 3" = 1'-0"

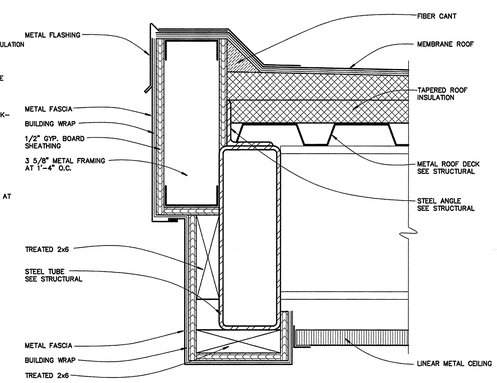

eave detail 7

SCALE: 3" = 1'-0"

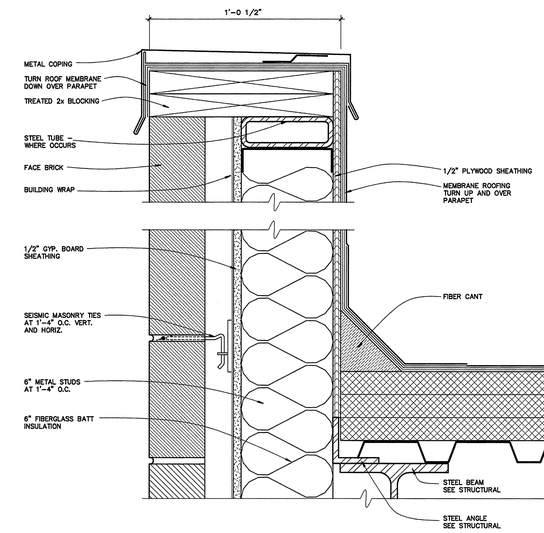

parapet detail 4

SCALE: 3" = 1'-0"

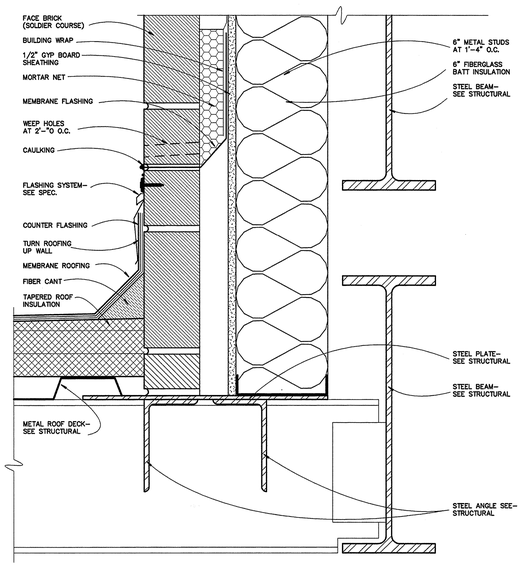

flashing detail 11

SCALE: 3" = 1'-0"

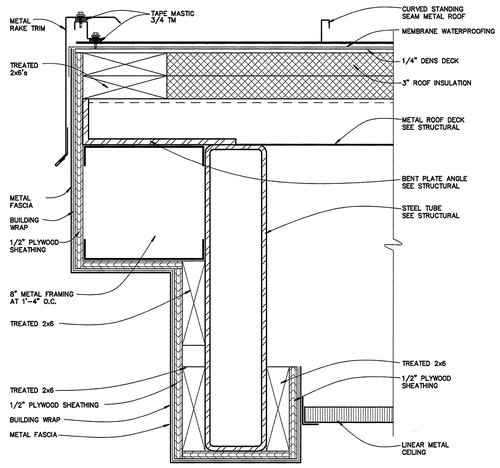

rake detail 8

SCALE: 3" = 1'-0"

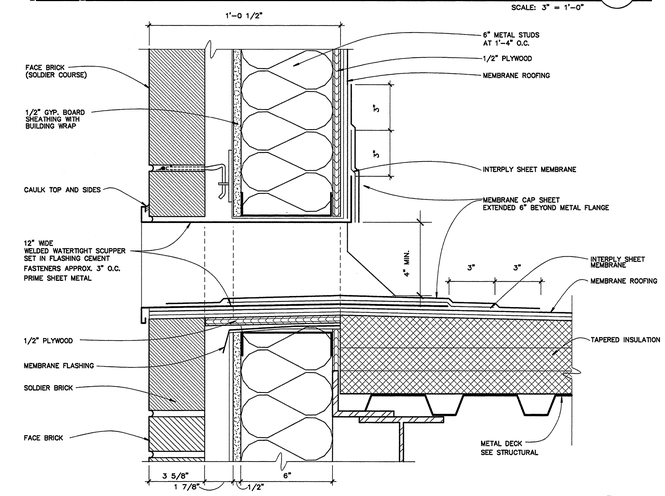

detail at scupper 5

EQUAL TO FIRESTONE DETAIL MB-S-1 SCALE: 3" = 1'-0"

ASU ARKANSAS STATE UNIVERSITY

DONALD W. REYNOLDS CENTER FOR HEALTH SCIENCES

ARKANSAS STATE UNIVERSITY

JONESBORO, ARKANSAS

BRACKETT KRENNERICH architects

100 East Huntington, Suite D · P.O. Box 19555 · Jonesboro, Arkansas 72403-1955
870-932-0575 Fax 870-932-0571 www.bkarchs.com

Commission Number 12406

A104

Date: January 25, 2008

S:\Projects\Current\ASU Reynolds Center for Health Sciences\Working Drawings\A104.dwg Saved: January 23, 2008 Steve

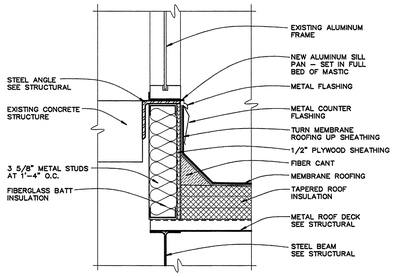

flashing detail (7)

SCALE: 1 1/2" = 1'-0"

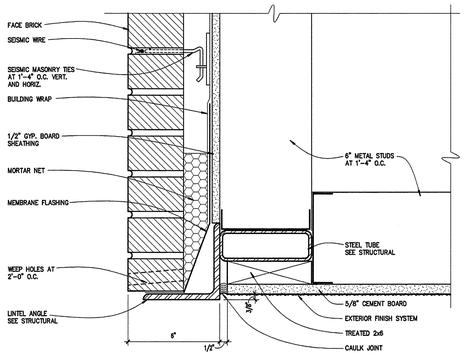

soffit detail (8)

SCALE: 3" = 1'-0"

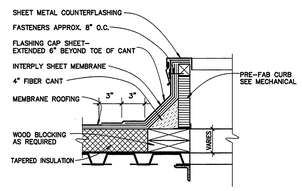

curb detail (9)

SCALE: 1 1/2" = 1'-0"

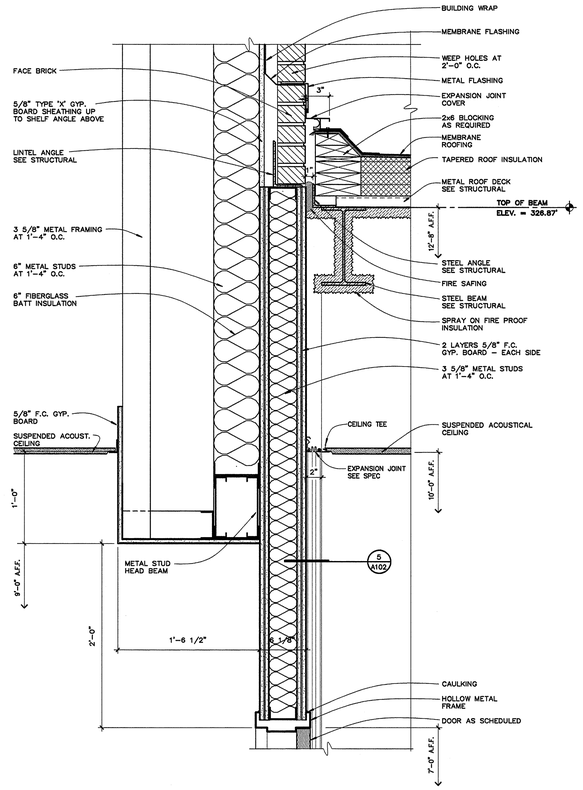

expansion joint detail (4)

SCALE: 1 1/2" = 1'-0"

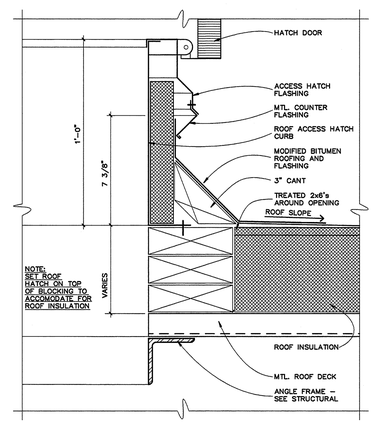

roof hatch detail (5)

SCALE: 3" = 1'-0"

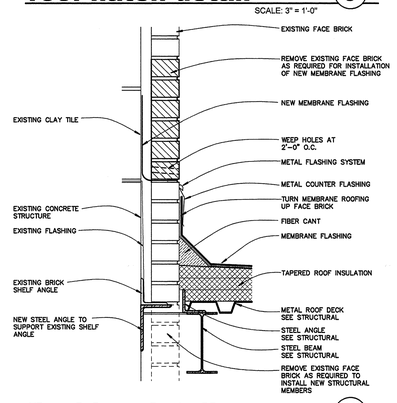

flashing detail (6)

SCALE: 1 1/2" = 1'-0"

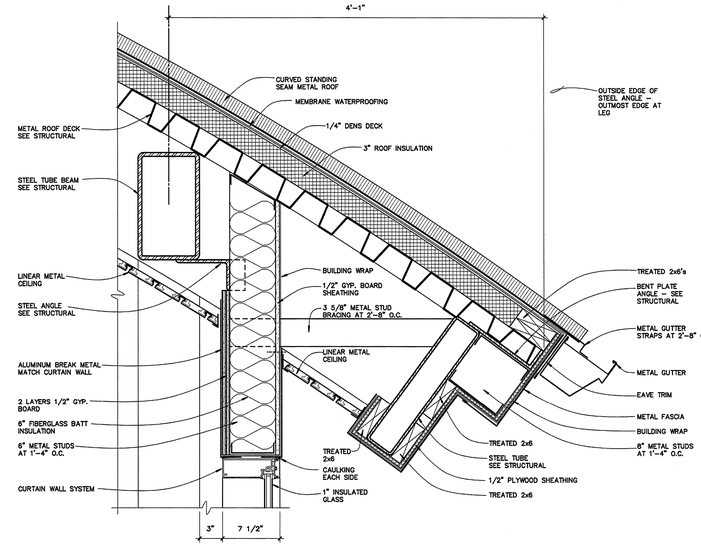

eave / head detail (1)

SCALE: 1 1/2" = 1'-0"

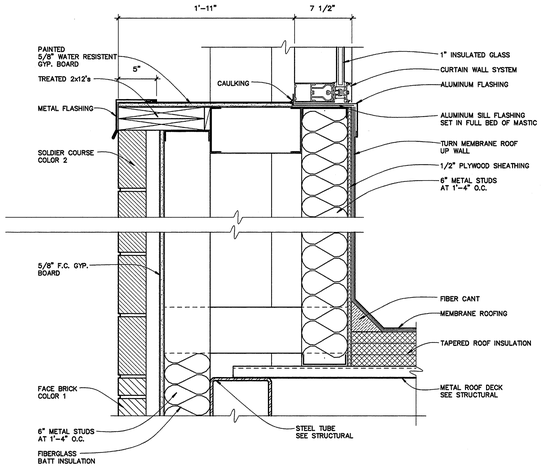

eave / head detail (2)

SCALE: 1 1/2" = 1'-0"

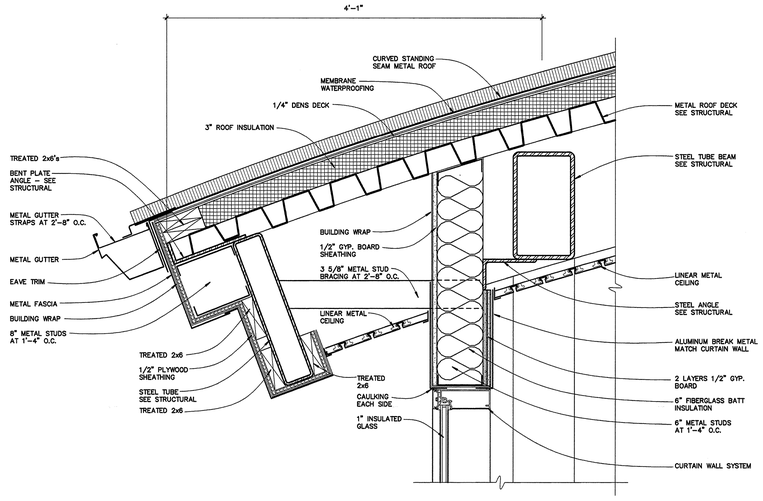

eave / head detail (3)

SCALE: 1 1/2" = 1'-0"

ASU
ARKANSAS STATE UNIVERSITY

DONALD W. REYNOLDS CENTER FOR HEALTH SCIENCES
ARKANSAS STATE UNIVERSITY
JONESBORO, ARKANSAS

BRACKETT KRENNERICH architects
100 East Huntington, Suite D · P.O. Box 1655 · Jonesboro, Arkansas 72403-1655
870-932-0571 Fax 870-932-0975 www.bkarchits.com

Commission Number 12406

A105

Date: January 25, 2008

S:\Projects\Current\ASU Reynolds Center for Health Sciences\Working Drawings\A105.dwg January 23, 2008 Steve

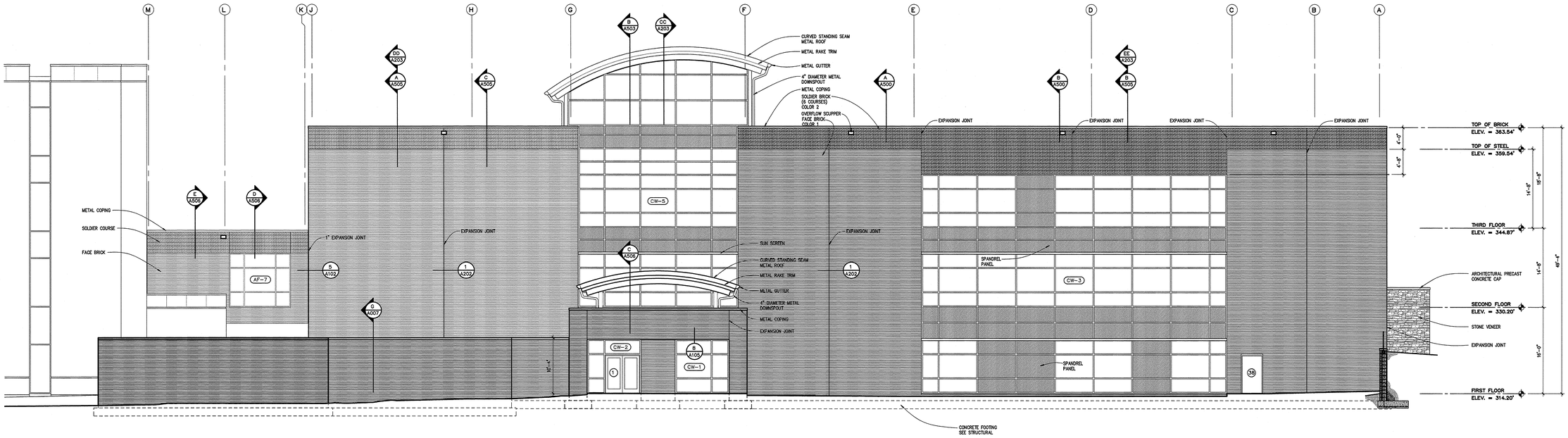

east elevation

SCALE: 1/8" = 1'-0"

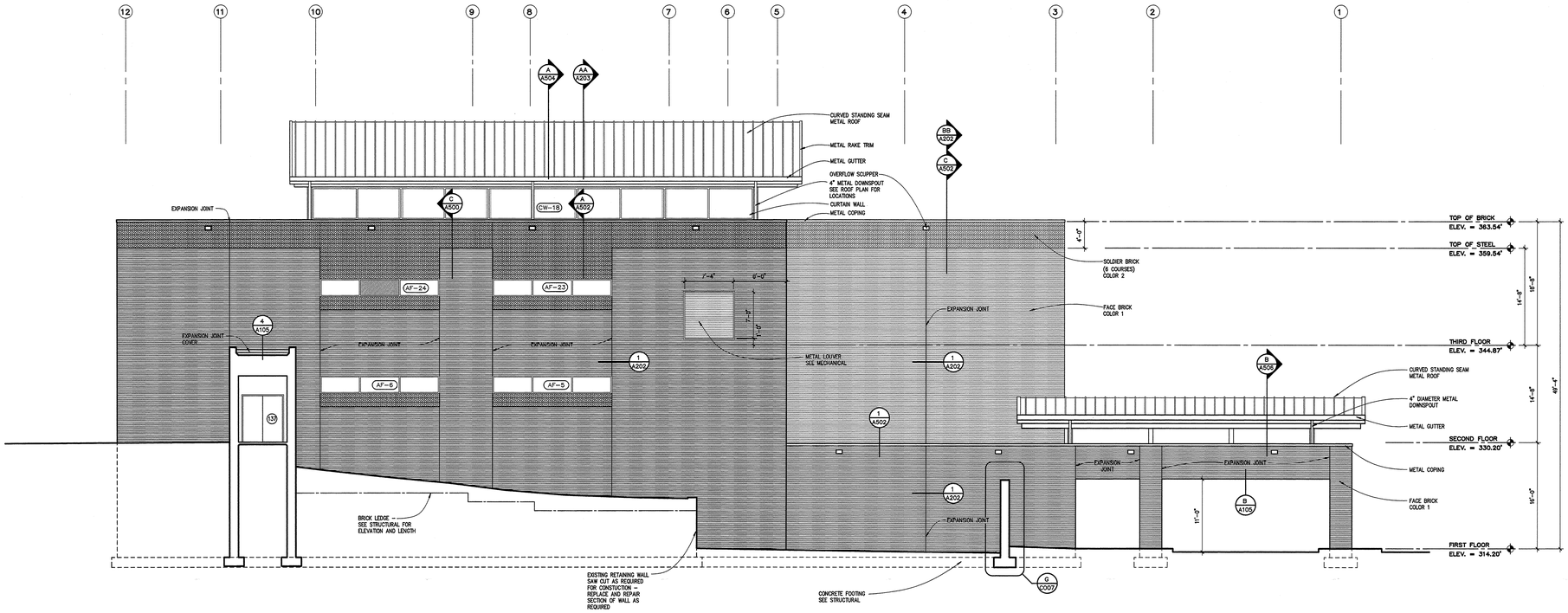

south elevation

SCALE: 1/8" = 1'-0"

ARKANSAS STATE UNIVERSITY

DONALD W. REYNOLDS CENTER FOR HEALTH SCIENCES

ARKANSAS STATE UNIVERSITY

JONESBORO, ARKANSAS

BRACKETT KRENNERICH architects

100 East Harrington, Suite D P.O. Box 1655 Jonesboro, Arkansas 72403-1655
870-932-0571 Fax 870-932-0975 www.bkarchs.com

Commission Number 12406

A200

Date: January 25, 2008

S:\Projects\Current\ASU Reynolds Center for Health Sciences\Working Drawings\A200.dwg Thursday, January 23, 2008 Steve

ARKANSAS STATE UNIVERSITY

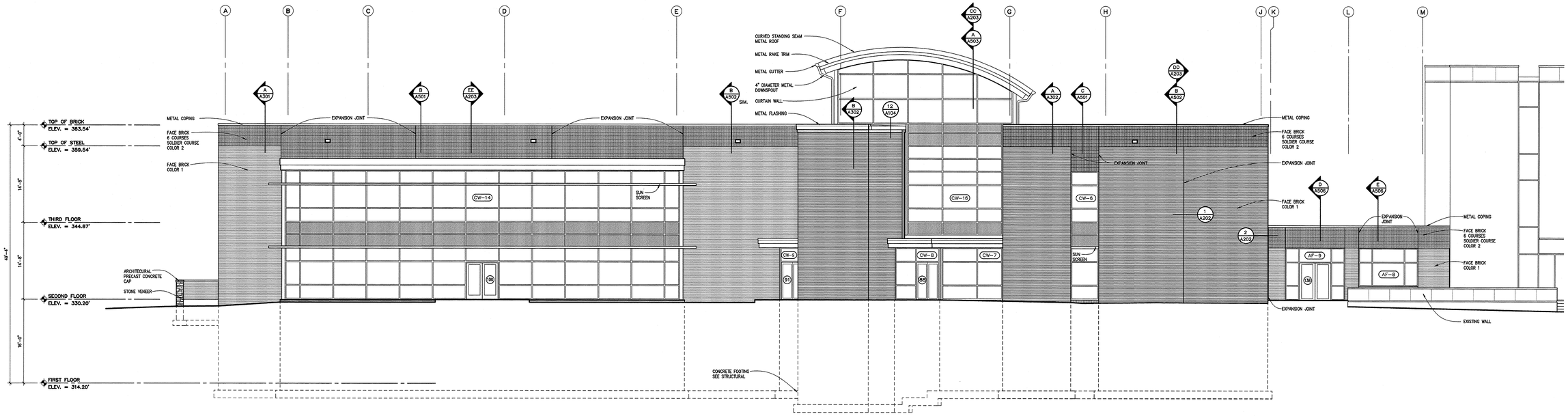

west elevation

SCALE: 1/8" = 1'-0"

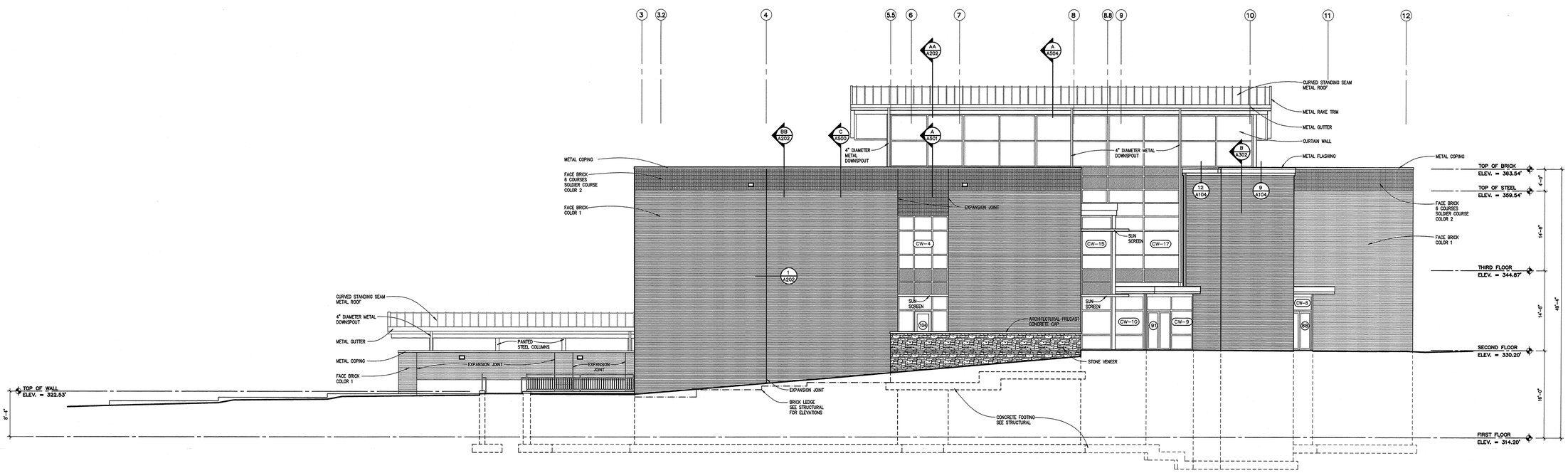

north elevation

SCALE: 1/8" = 1'-0"

DONALD W. REYNOLDS CENTER FOR HEALTH SCIENCES

ARKANSAS STATE UNIVERSITY

JONESBORO, ARKANSAS

BRACKETT KRENNERICH architects

100 East Huntington, Suite D P.O. Box 1655 Jonesboro, Arkansas 72403-1655

870-932-0571 Fax 870-932-0975 www.bkarchs.com

Commission Number
12406

A201

Date: January 25, 2008

S:\Projects\Current\A30 Reynolds Center for Health Sciences\Working Drawings\A200\Elevations.dwg January 23, 2008 Steve

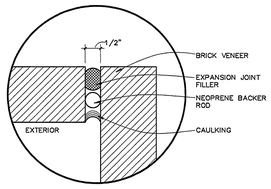

brick exp. joint detail 2
SCALE: 3" = 1'-0"

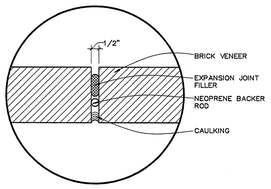

brick exp. joint detail 1
SCALE: 3" = 1'-0"

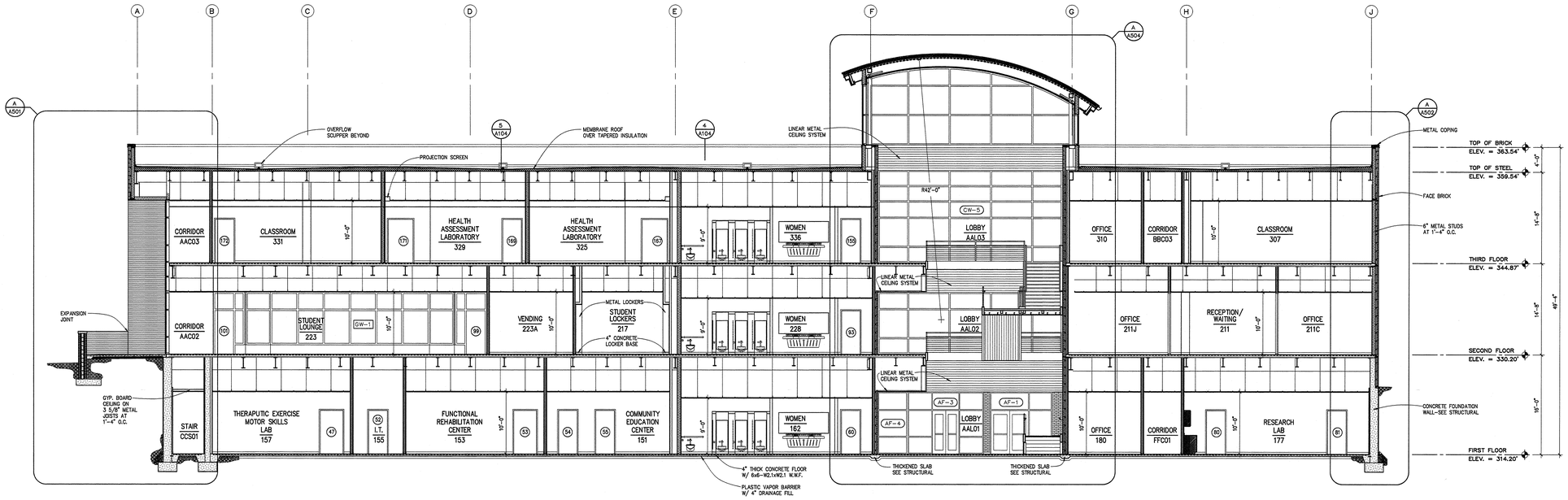

building section 'AA'
SCALE: 1/8" = 1'-0"

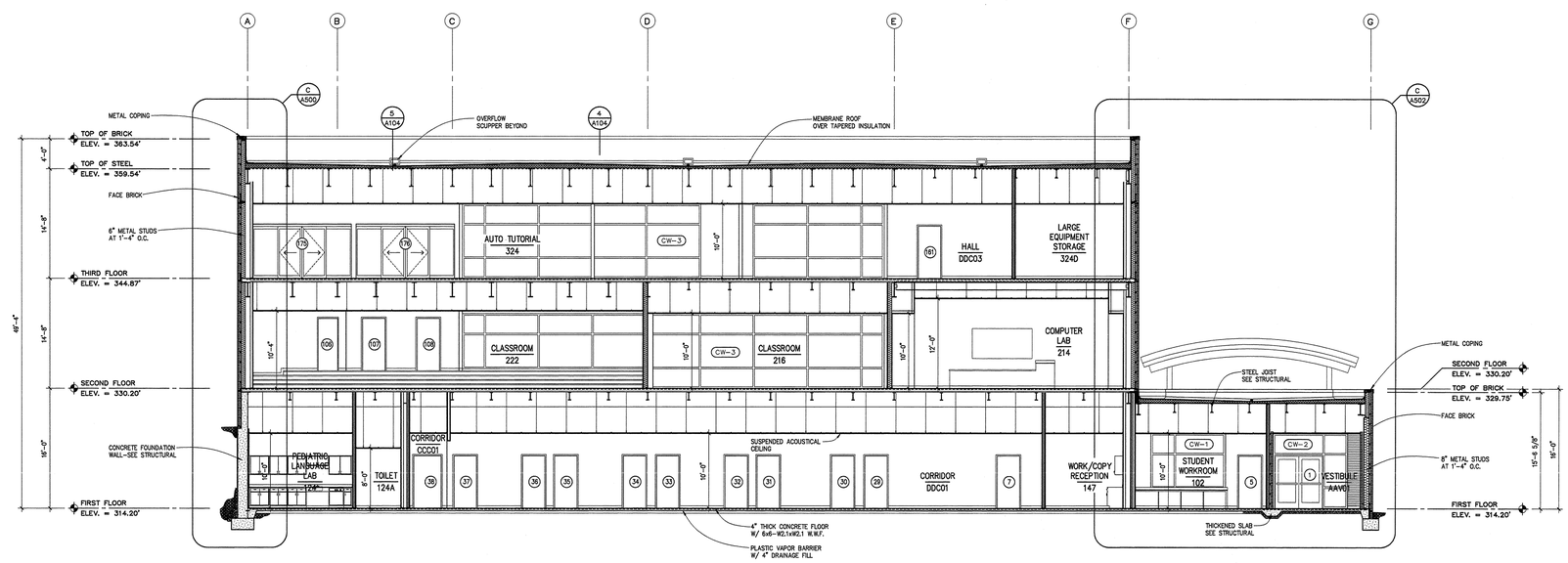

building section 'BB'
SCALE: 1/8" = 1'-0"

ASU
ARKANSAS STATE UNIVERSITY

DONALD W. REYNOLDS CENTER FOR HEALTH SCIENCES
ARKANSAS STATE UNIVERSITY
JONESBORO, ARKANSAS

BRACKETT KRENNERICH architects
109 East Huntington, Suite D P.O. Box 1655 Jonesboro, Arkansas 72403-1655
870-932-0571 Fax 870-932-0975 www.bkarchts.com

Commission Number 12406
A202
Date: January 25, 2008

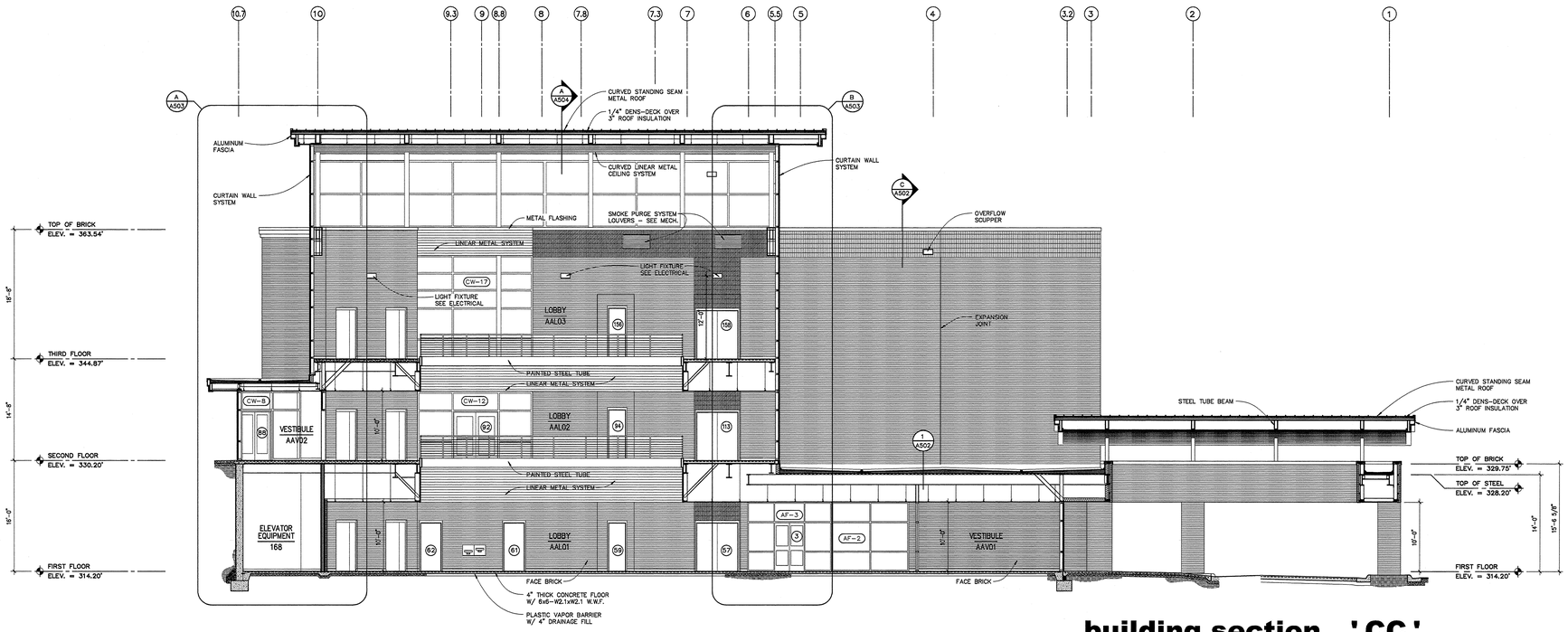

building section 'CC'

SCALE: 1/8" = 1'-0"

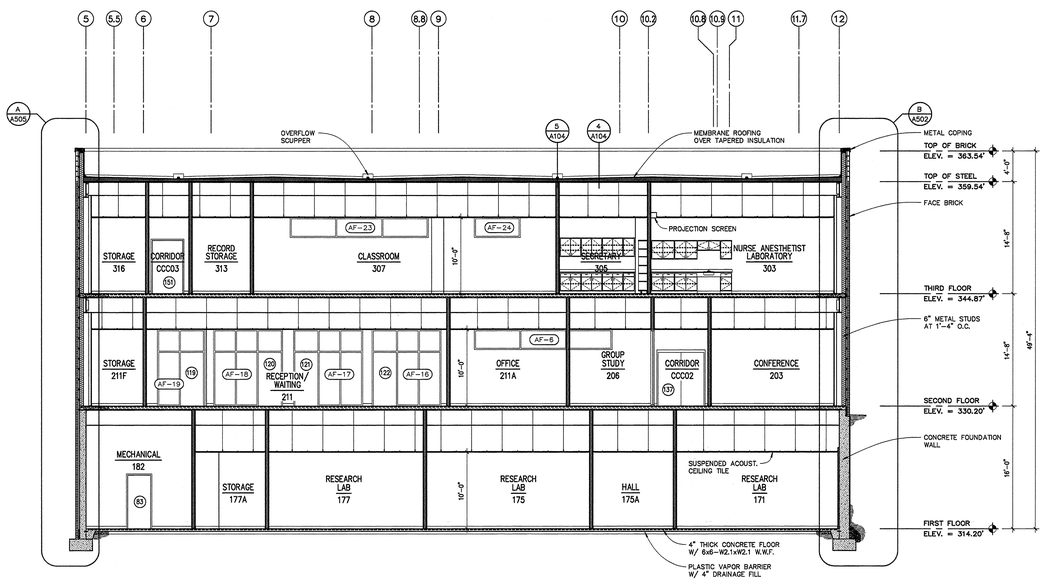

building section 'DD'

SCALE: 1/8" = 1'-0"

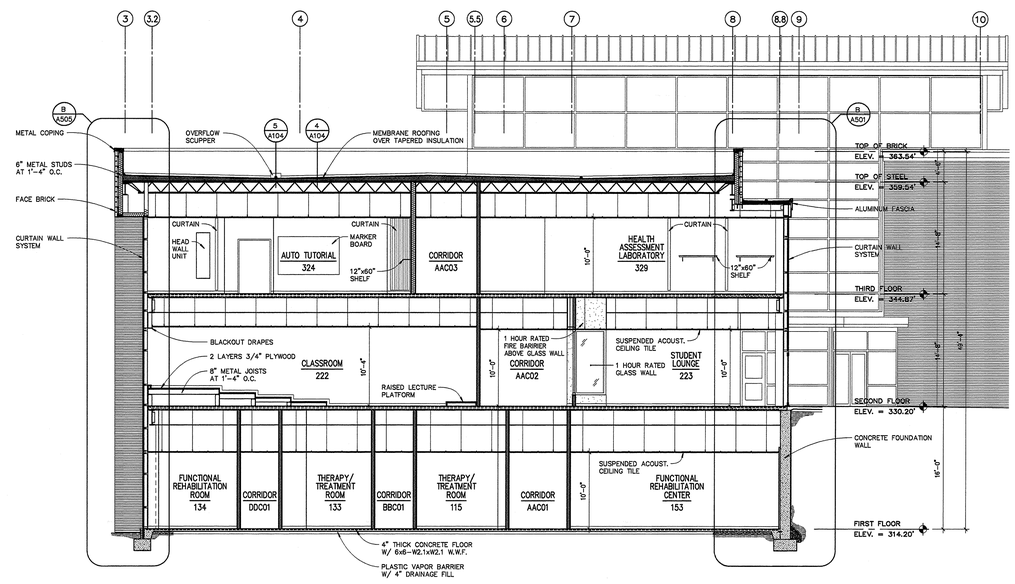

building section 'EE'

SCALE: 1/8" = 1'-0"

ASU ARKANSAS STATE UNIVERSITY

DONALD W. REYNOLDS CENTER FOR HEALTH SCIENCES

ARKANSAS STATE UNIVERSITY

JONESBORO, ARKANSAS

BRACKETT KRENNERICH architects

100 East Huntington, Suite D P.O. Box 1655 Jonesboro, Arkansas 72403-1655

870-932-0571 Fax: 870-932-0975 www.bkarchits.com

Commission Number 12406

A203

Date: January 25, 2008

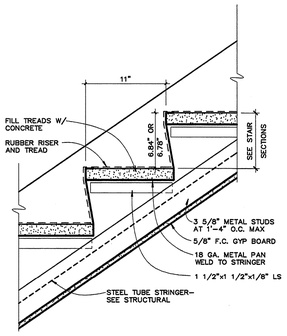

riser detail 7
STAIR CC, DD SCALE: 1 1/2" = 1'-0"

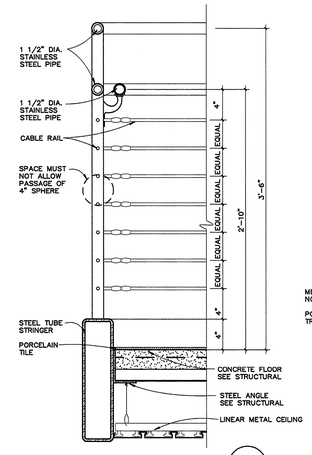

guardrail detail 6
SCALE: 1 1/2" = 1'-0"

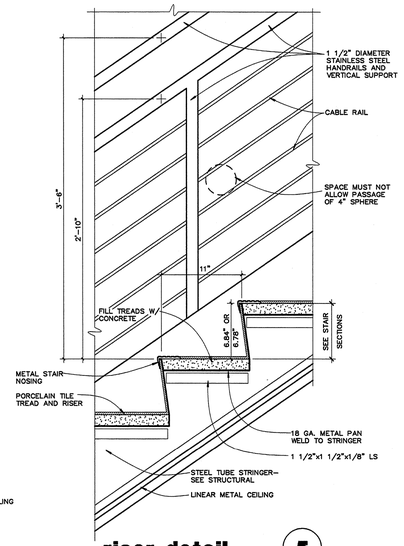

riser detail 5
STAIR AA, BB SCALE: 1 1/2" = 1'-0"

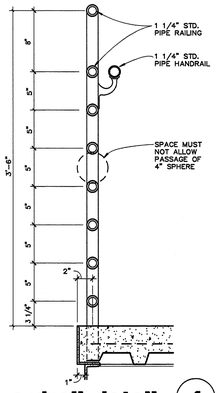

guardrail detail 4
SCALE : 1 1/2" = 1'-0"

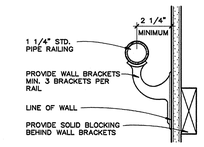

detail at rail 3
SCALE: 3" = 1'-0"

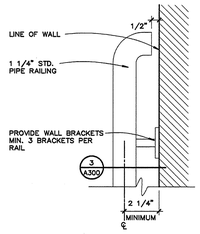

detail at rail 2
SCALE: 3" = 1'-0"

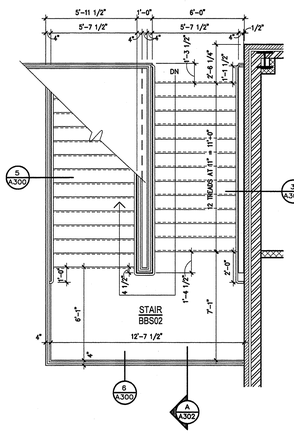

enlarged stair plan
SCALE: 1/4" = 1'-0"

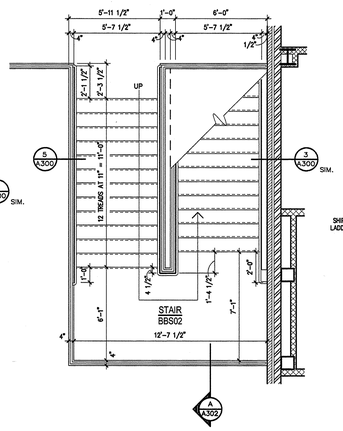

enlarged stair plan
SCALE: 1/4" = 1'-0"

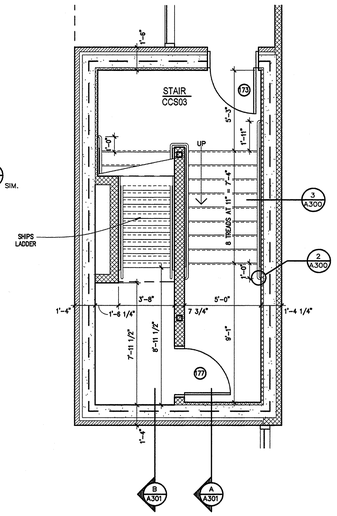

enlarged stair plan
SCALE: 1/4" = 1'-0"

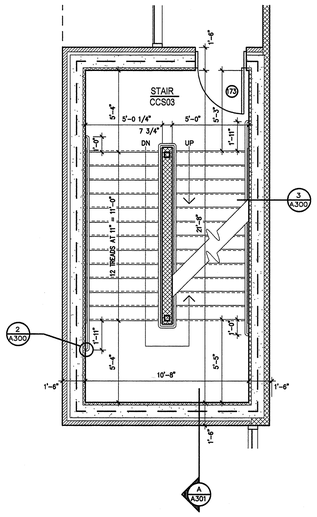

enlarged stair plan
SCALE: 1/4" = 1'-0"

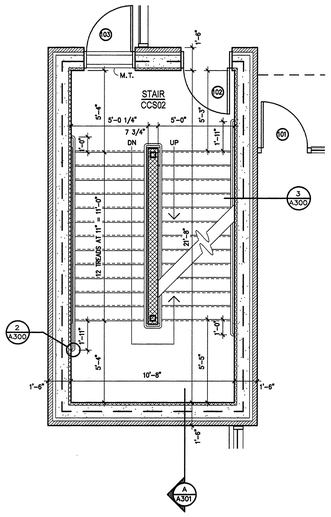

enlarged stair plan
SCALE: 1/4" = 1'-0"

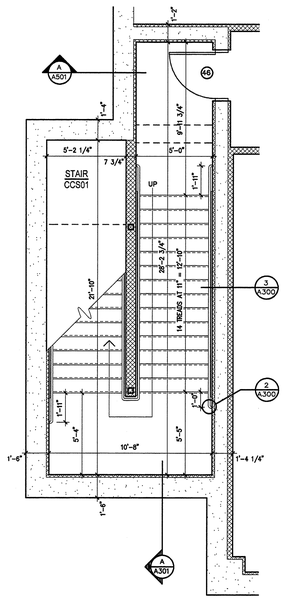

enlarged stair plan
SCALE: 1/4" = 1'-0"

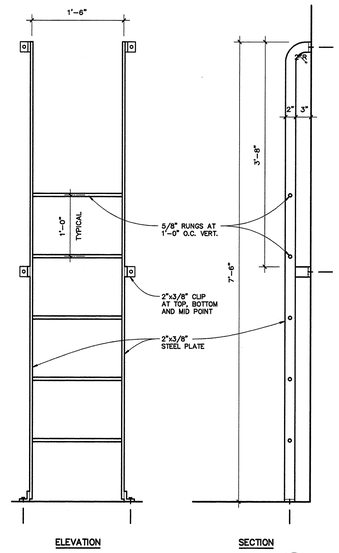

pit ladder detail 1
SCALE: 1" = 1'-0"

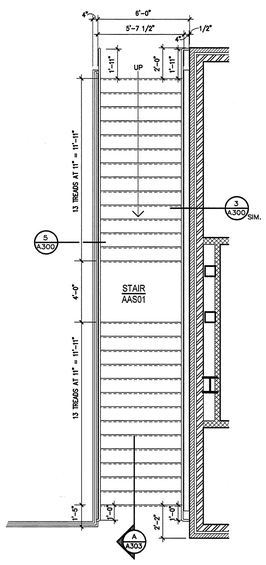

enlarged stair plan
SCALE: 1/4" = 1'-0"

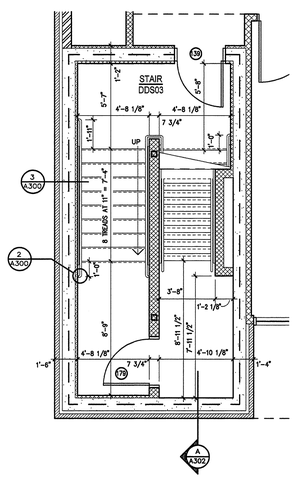

enlarged stair plan
SCALE: 1/4" = 1'-0"

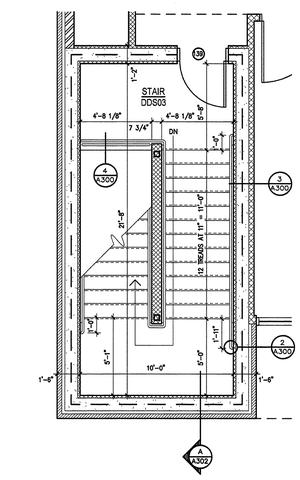

enlarged stair plan
SCALE: 1/4" = 1'-0"

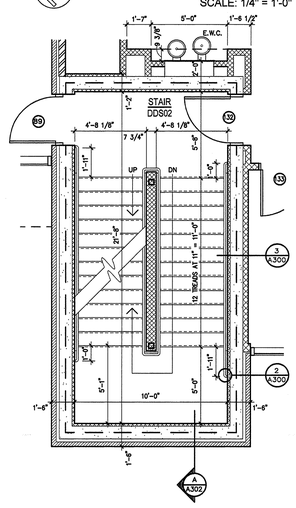

enlarged stair plan
SCALE: 1/4" = 1'-0"

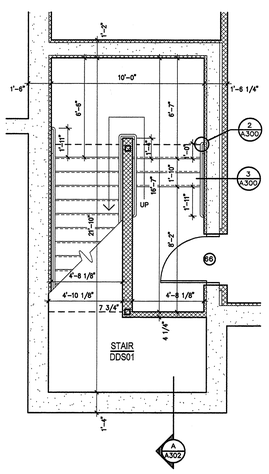

enlarged stair plan
SCALE: 1/4" = 1'-0"

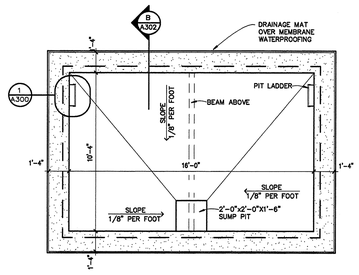

elevator pit plan
SCALE: 1/4" = 1'-0"

ASU ARKANSAS STATE UNIVERSITY

DONALD W. REYNOLDS CENTER FOR HEALTH SCIENCES
ARKANSAS STATE UNIVERSITY
JONESBORO, ARKANSAS

BRACKETT KRENNERICH architects

100 East Huntington, Suite D P.O. Box 1655 Jonesboro, Arkansas 72403-1655
870-932-0571 Fax 870-932-0975 www.bkarchs.com

Commission Number 12406
A300
Date: January 25, 2008

S:\Projects\Current\ASU Reynolds Center for Health Sciences\Working Drawings\A300.dwg Wednesday, January 23, 2008 Steve

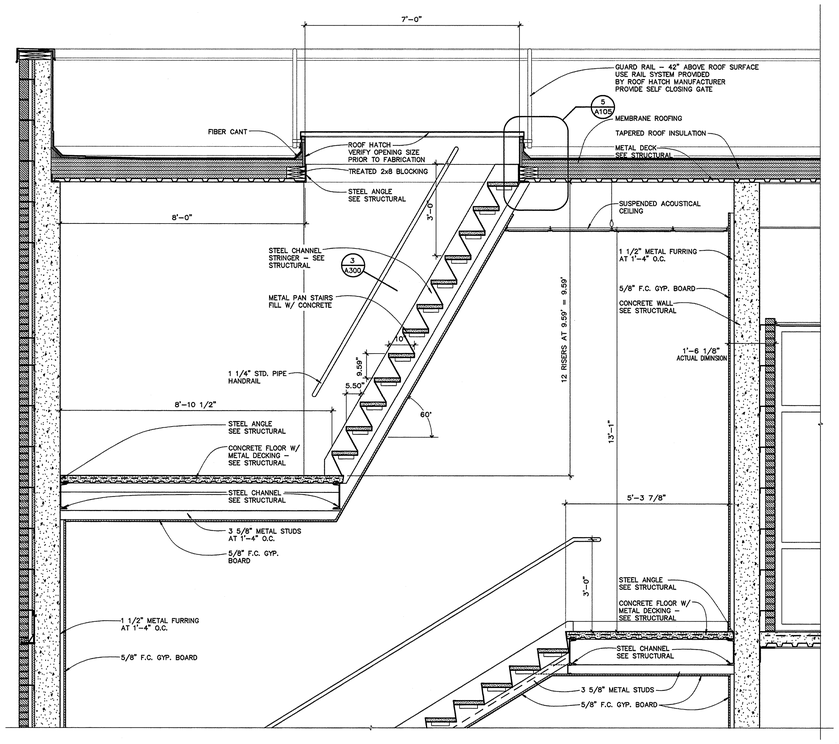

SEE SECTION A/A301 FOR ADDITIONAL NOTES

ships ladder section (B)

SCALE: 1/2" = 1'-0"

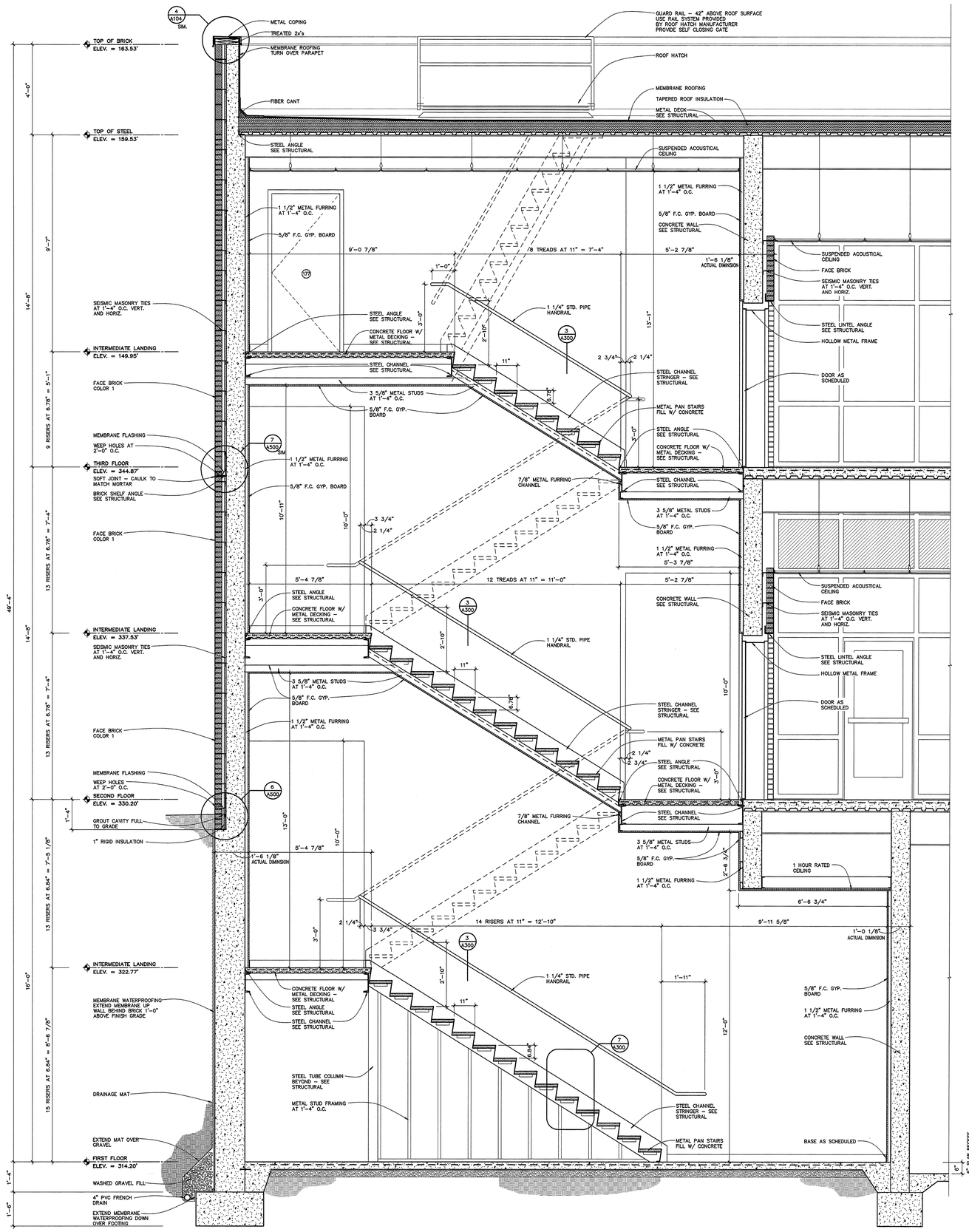

stair section (A)

SCALE: 1/2" = 1'-0"

ASU
ARKANSAS STATE UNIVERSITY

DONALD W. REYNOLDS CENTER FOR HEALTH SCIENCES

ARKANSAS STATE UNIVERSITY
JONESBORO, ARKANSAS

BRACKETT KRENNERICH
architects
100 East Huntington, Suite D P.O. Box 1655 Jonesboro, Arkansas 72403-1655
870-932-0571 Fax 870-932-0975 www.bkarchs.com

Commission Number
12406

A301

Date: January 25, 2008

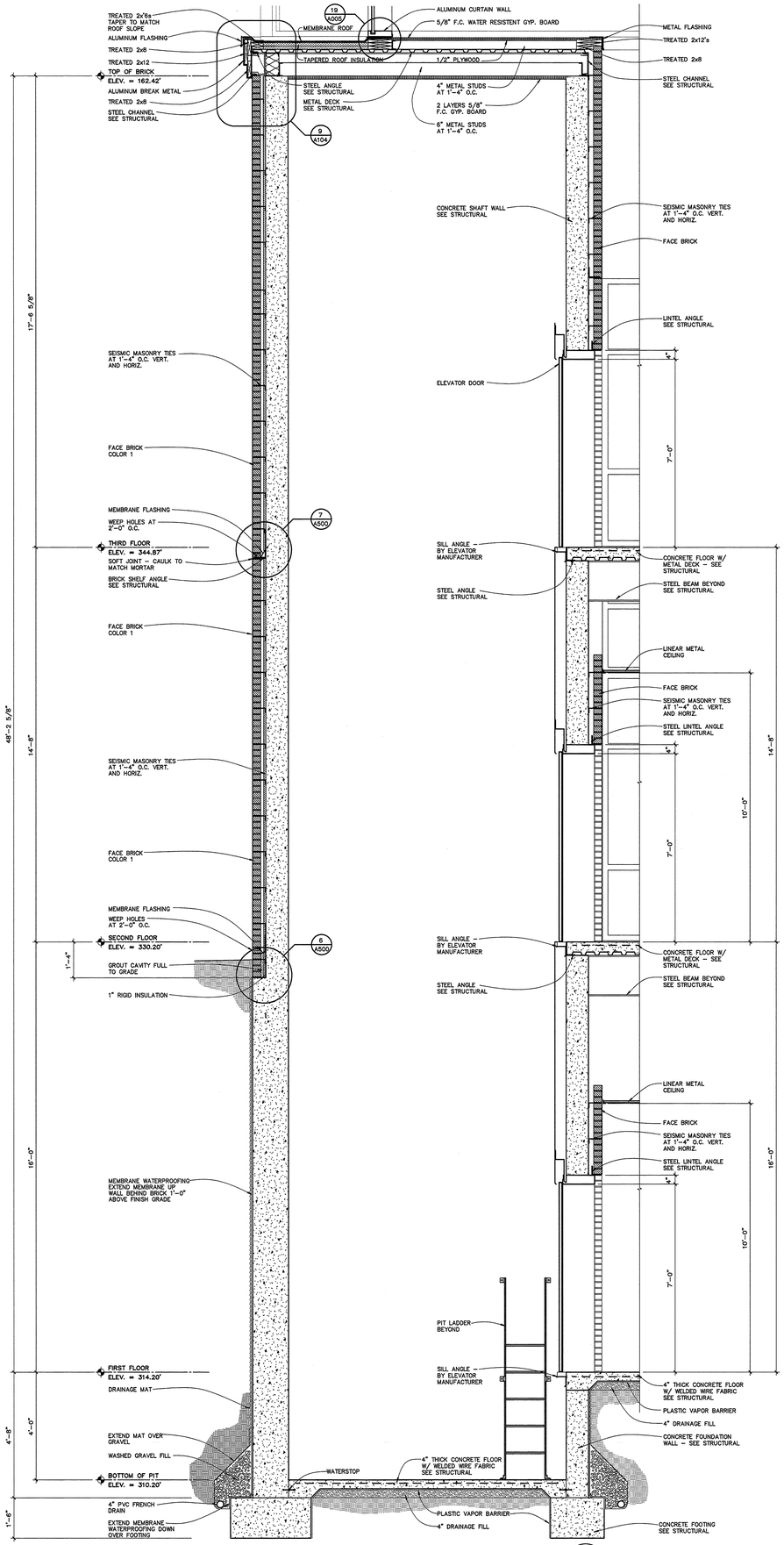

elevator shaft section (B)

SCALE: 1/2" = 1'-0"

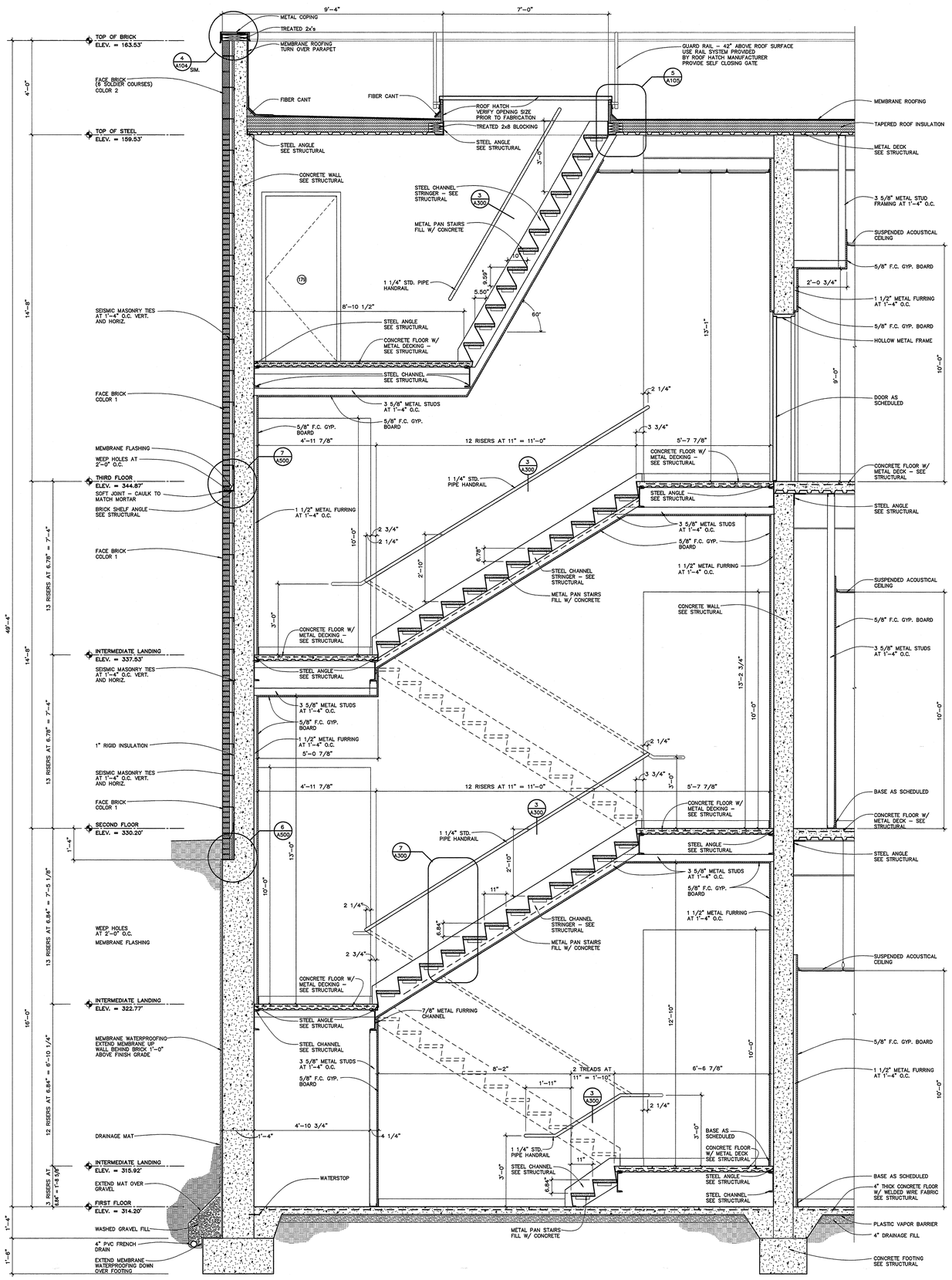

stair section (A)

SCALE: 1/2" = 1'-0"

ARKANSAS STATE UNIVERSITY

DONALD W. REYNOLDS CENTER FOR HEALTH SCIENCES

ARKANSAS STATE UNIVERSITY

JONESBORO, ARKANSAS

BRACKETT KRENNERICH architects

100 East Huntington, Suite D P.O. Box 16555 Jonesboro, Arkansas 72403-16555

870-932-0571 Fax: 870-932-0575 www.bkarchs.com

Commission Number 12406

A302

Date: January 25, 2008

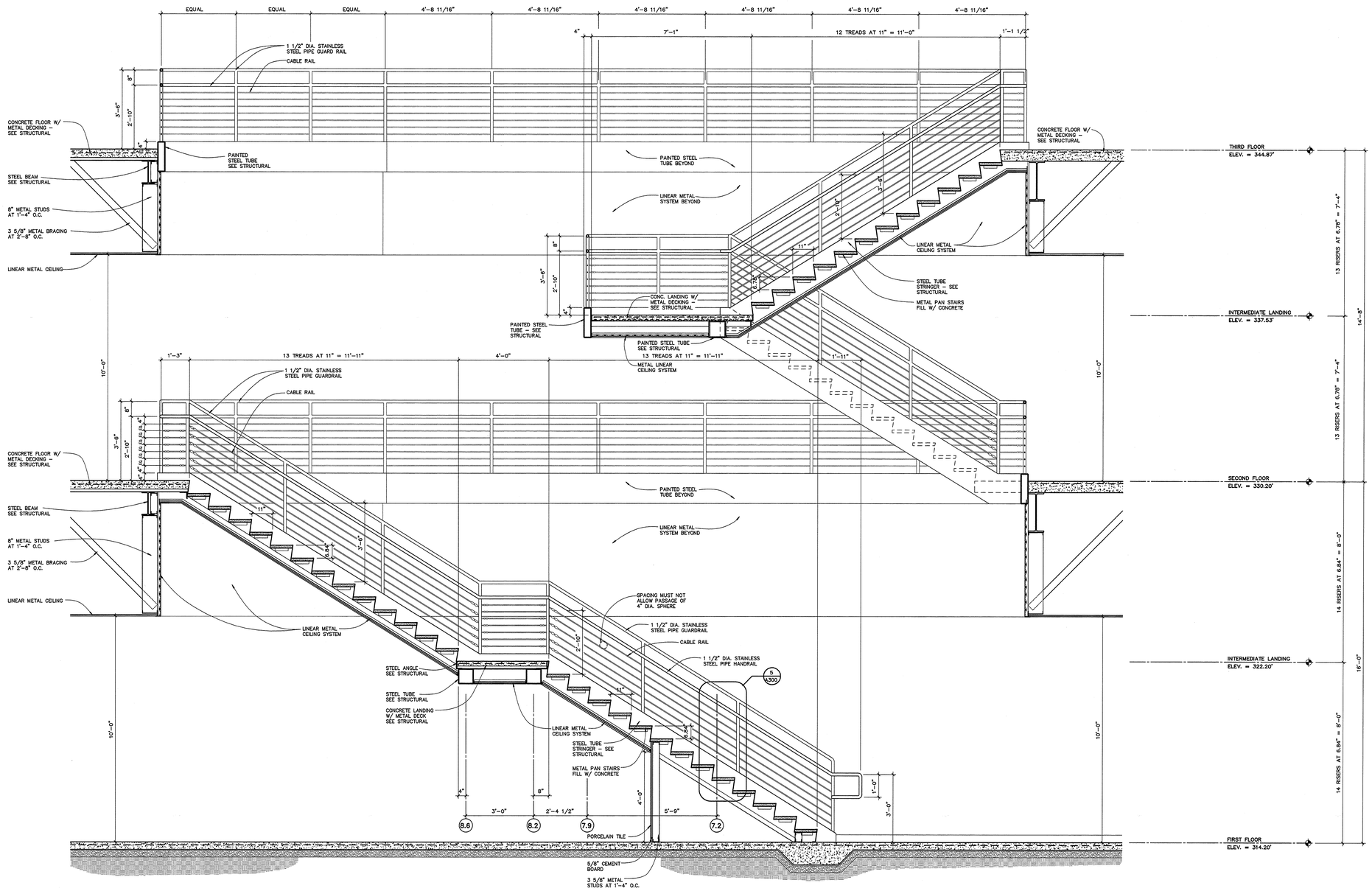

stair section

A

SCALE: 1/2" = 1'-0"

ARKANSAS STATE UNIVERSITY

DONALD W. REYNOLDS CENTER FOR HEALTH SCIENCES

ARKANSAS STATE UNIVERSITY

JONESBORO, ARKANSAS

BRACKETT KRENNERICH architects

100 East Huntington, Suite D - P.O. Box 1655 - Jonesboro, Arkansas 72403-1655

870-932-0571 Fax 870-932-0975 www.bkarchs.com

Commission Number 12406

A303

Date: January 25, 2008

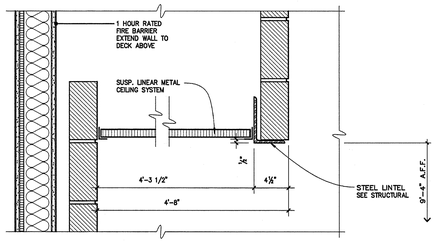

furrdown detail 3

SCALE: 1 1/2" = 1'-0"

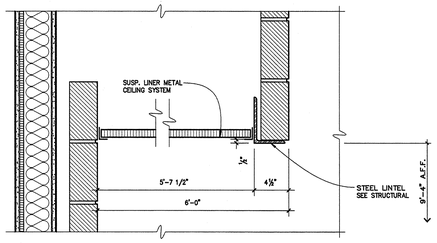

furrdown detail 2

SCALE: 1 1/2" = 1'-0"

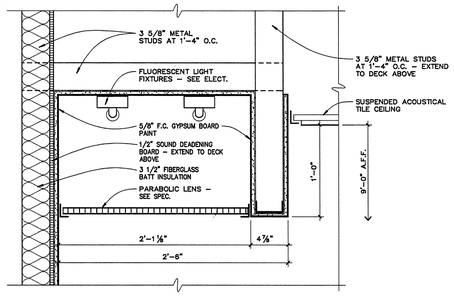

light cove detail 1

SCALE: 1 1/2" = 1'-0"

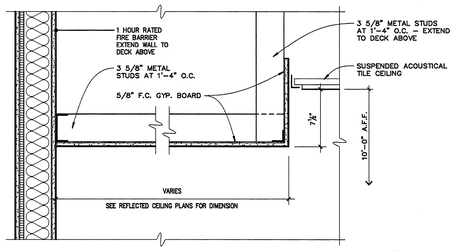

furrdown detail 4

SCALE: 1 1/2" = 1'-0"

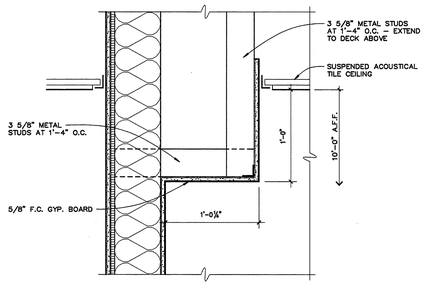

furrdown detail 5

SCALE: 1 1/2" = 1'-0"

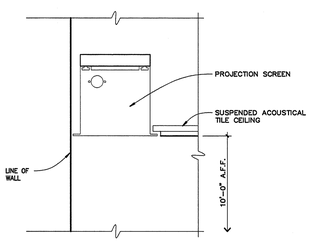

projection screen detail 6

SCALE: 1 1/2" = 1'-0"

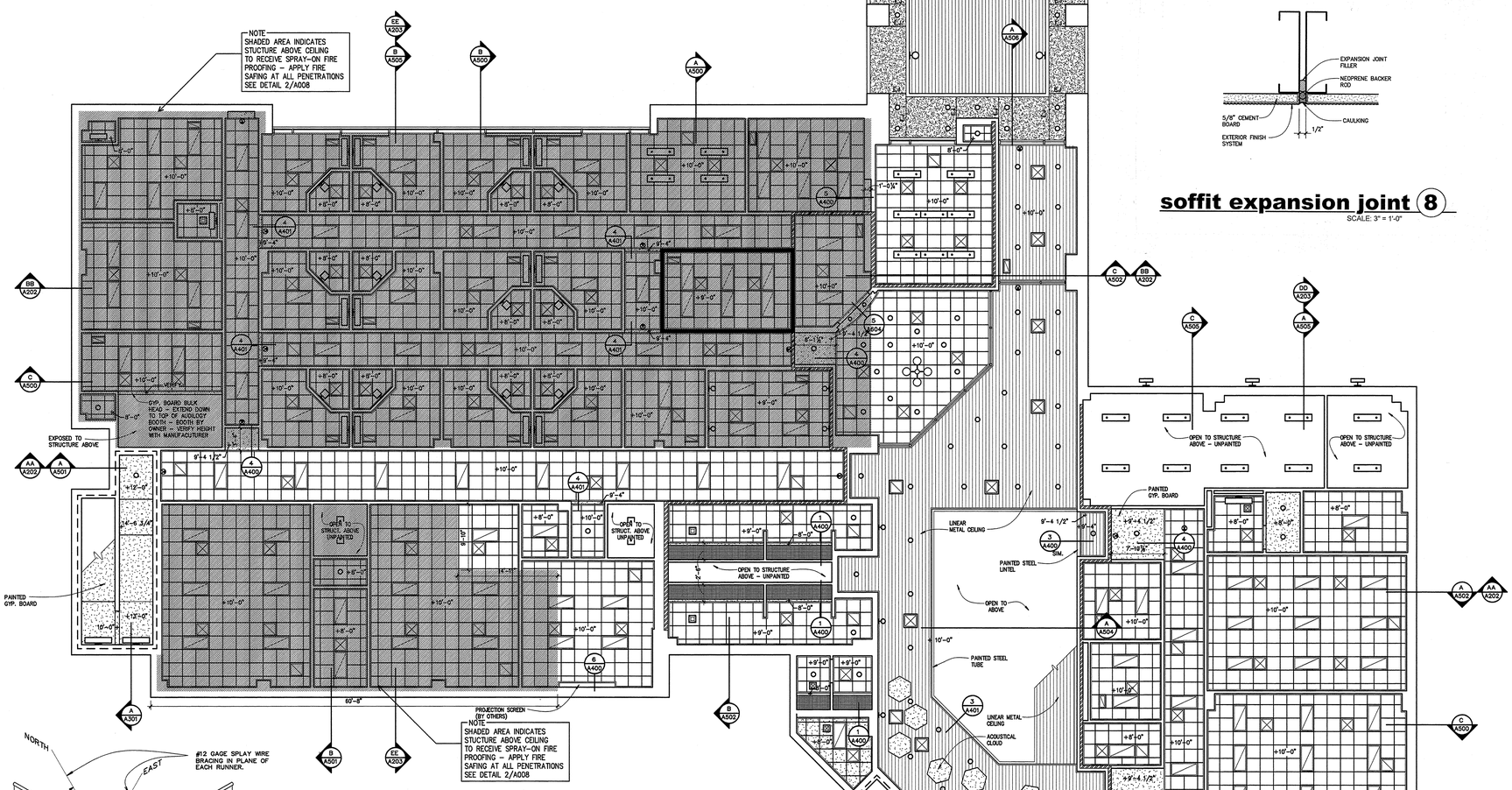

first floor reflected ceiling plan

SCALE: 1/8" = 1'-0"

soffit expansion joint 8

SCALE: 3" = 1'-0"

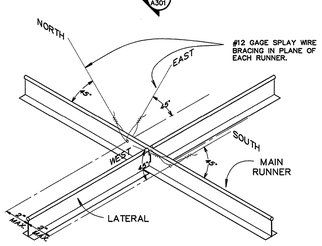

isometric view

NO SCALE

NOTE: CEILINGS OF 144 SQ. FT. OR LESS, SURROUNDED BY WALLS THAT CONNECT DIRECTLY TO THE STRUCTURE ABOVE, ARE EXCLUDED FROM THIS RECOMMENDED PRACTICE.

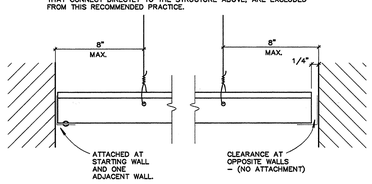

runners at walls

NO SCALE

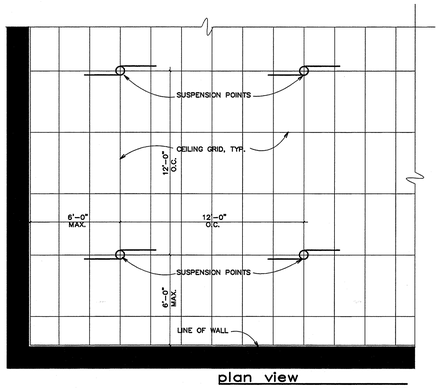

plan view

NO SCALE

detail at suspended ceiling system 7

TYPICAL ALL SUSPENDED CEILINGS

LEGEND

ARCHITECTURAL

- 2x2 MOISTURE RESISTANT SUSPENDED CEILING TILE
- 2x2 SUSPENDED ACOUSTICAL CEILING SYSTEM
- GYPSUM BOARD
- EXTERIOR FINISH SYSTEM
- OPEN TO STRUCTURE ABOVE

MECHANICAL

- RETURN AIR GRILLE
- SUPPLY AIR GRILLE
- EXAUST FAN

SEE MECHANICAL PLAN FOR FURTHER DETAILS AND INFORMATION

ELECTRICAL

- WALL SCONCE LIGHT FIXTURE
- INCANDESCENT LIGHT FIXTURE
- FLUORESCENT LIGHT FIXTURE
- FLUORESCENT LIGHT FIXTURE
- EXIT SIGN
- LIGHT COVE WITH PARACUBE LENS
- TRACK LIGHTING STRIP
- SURFACE MOUNTED FLUORESCENT LIGHT FIXTURE
- SUSPENDED FLUORESCENT LIGHT FIXTURE
- PENDENT LIGHT FIXTURE

SEE LIGHTING PLAN FOR FURTHER DETAILS AND INFORMATION

ASU ARKANSAS STATE UNIVERSITY

DONALD W. REYNOLDS CENTER FOR HEALTH SCIENCES

ARKANSAS STATE UNIVERSITY

JONESBORO, ARKANSAS

BRACKETT KRENNERICH architects

100 East Huntington, Suite D P.O. Box 1655 Jonesboro, Arkansas 72403-1655

870-932-0571 Fax:870-932-0975 www.bkarchs.com

Commission Number 12406

A400

Date: January 25, 2008

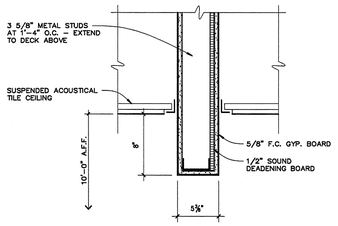

bulk head detail (4)
SCALE: 1 1/2" = 1'-0"

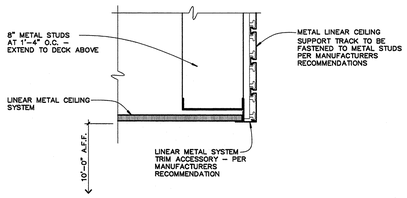

furrdown detail (3)
SCALE: 1 1/2" = 1'-0"

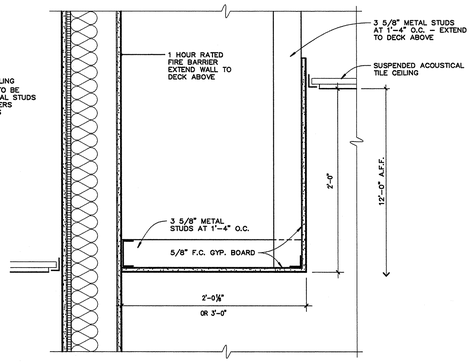

furrdown detail (2)
SCALE: 1 1/2" = 1'-0"

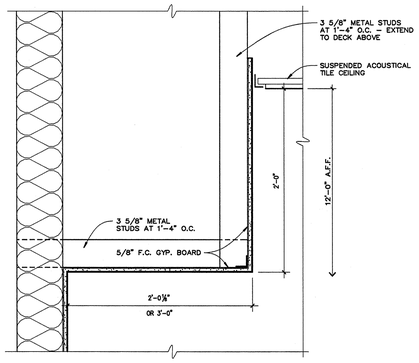

furrdown detail (1)
SCALE: 1 1/2" = 1'-0"

LEGEND

ARCHITECTURAL

- 2x2 MOISTURE RESISTANT SUSPENDED CEILING TILE
- 2x2 SUSPENDED ACOUSTICAL CEILING SYSTEM
- GYPSUM BOARD
- EXTERIOR INSULATION FINISH SYSTEM
- OPEN TO STRUCTURE ABOVE

MECHANICAL

- RETURN AIR GRILLE
- SUPPLY AIR GRILLE
- EXAUST FAN

SEE MECHANICAL PLAN FOR FURTHER DETAILS AND INFORMATION

ELECTRICAL

- WALL SCONCE LIGHT FIXTURE
- INCANDESCENT LIGHT FIXTURE
- FLUORESCENT LIGHT FIXTURE
- FLUORESCENT LIGHT FIXTURE
- EXIT SIGN
- LIGHT COVE WITH PARACUBE LENS
- TRACK LIGHTING STRIP
- SURFACE MOUNTED FLUORESCENT LIGHT FIXTURE
- SUSPENDED FLUORESCENT LIGHT FIXTURE
- PENDENT LIGHT FIXTURE

SEE LIGHTING PLAN FOR FURTHER DETAILS AND INFORMATION

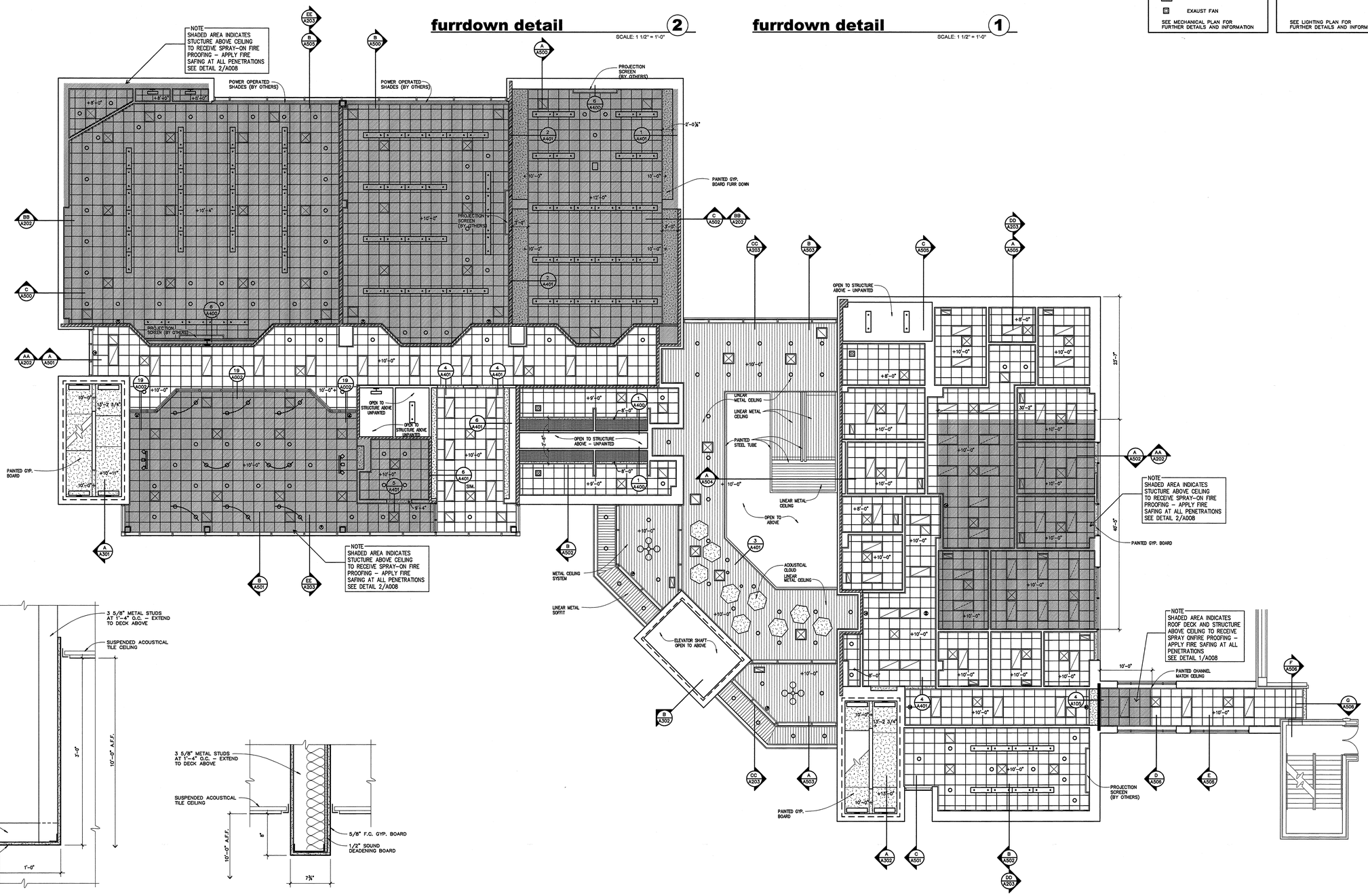

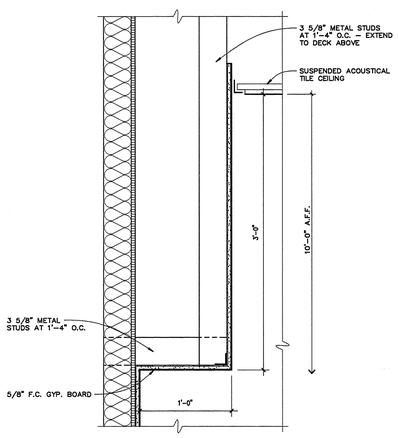

furrdown detail (6)
SCALE: 1 1/2" = 1'-0"

bulk head detail (5)
SCALE: 1 1/2" = 1'-0"

n **second floor reflected ceiling plan**
SCALE: 1/8" = 1'-0"

ASU ARKANSAS STATE UNIVERSITY

DONALD W. REYNOLDS CENTER FOR HEALTH SCIENCES
ARKANSAS STATE UNIVERSITY
JONESBORO, ARKANSAS

BRACKETT KRENNERICH architects
100 East Huntington, Suite D P.O. Box 1655 Jonesboro, Arkansas 72403-1655
870-932-0571 Fax 870-932-0975 www.bkarchs.com

Commission Number 12406
A401
Date: January 25, 2008

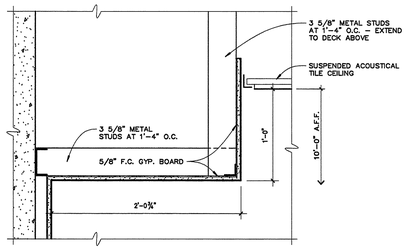

furrdown detail 3

SCALE: 1 1/2" = 1'-0"

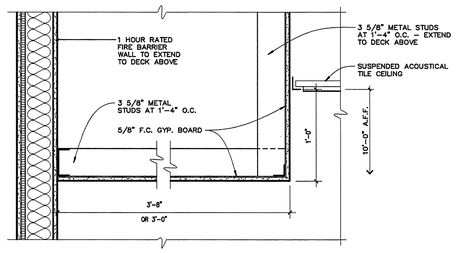

furrdown detail 2

SCALE: 1 1/2" = 1'-0"

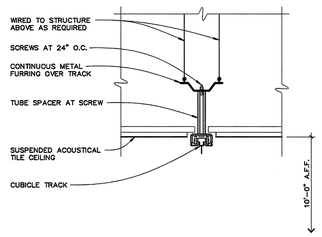

furrdown detail 1

SCALE: 1 1/2" = 1'-0"

LEGEND

ARCHITECTURAL

- 2x2 MOISTURE RESISTANT SUSPENDED CEILING TILE
- 2x2 SUSPENDED ACOUSTICAL CEILING SYSTEM
- GYPSUM BOARD
- EXTERIOR INSULATION FINISH SYSTEM
- OPEN TO STRUCTURE ABOVE

MECHANICAL

- RETURN AIR GRILLE
- SUPPLY AIR GRILLE
- EXAUST FAN

SEE MECHANICAL PLAN FOR FURTHER DETAILS AND INFORMATION

ELECTRICAL

- WALL SCONCE LIGHT FIXTURE
- INCANDESCENT LIGHT FIXTURE
- FLUORESCENT LIGHT FIXTURE
- FLUORESCENT LIGHT FIXTURE
- EXIT SIGN
- LIGHT COVE WITH PARACUBE LENS
- TRACK LIGHTING STRIP
- SURFACE MOUNTED FLUORESCENT LIGHT FIXTURE
- SUSPENDED FLUORESCENT LIGHT FIXTURE

SEE LIGHTING PLAN FOR FURTHER DETAILS AND INFORMATION

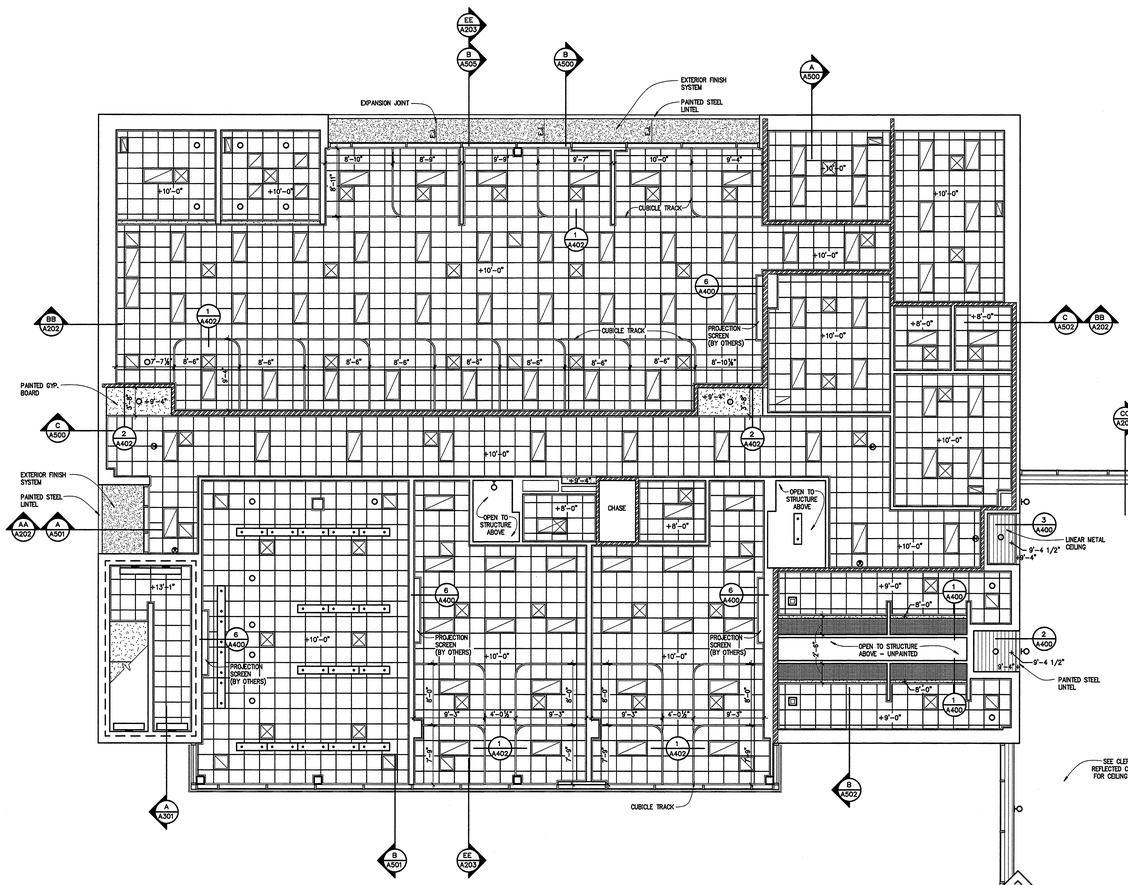

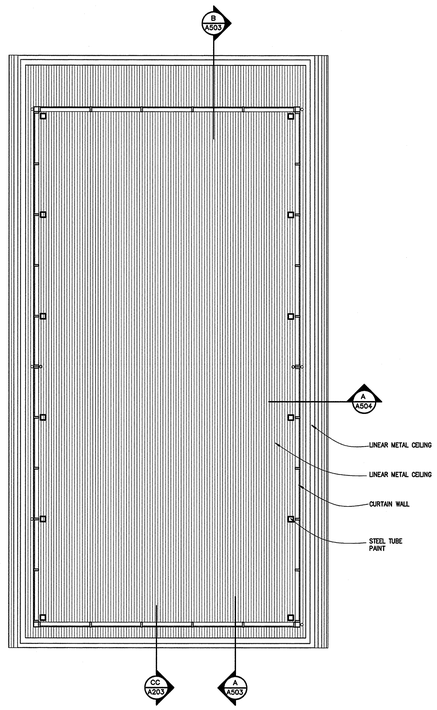

n **clerestory reflected ceiling plan**

SCALE: 1/8" = 1'-0"

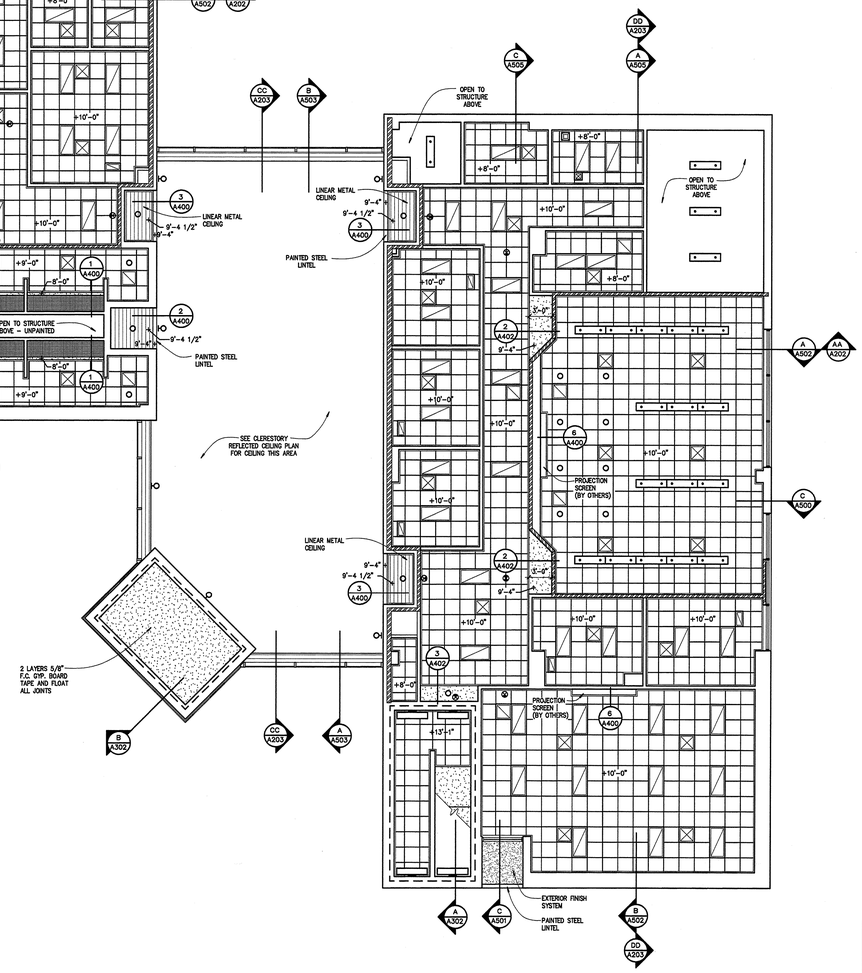

n **third floor reflected ceiling plan**

SCALE: 1/8" = 1'-0"

ARKANSAS STATE UNIVERSITY

DONALD W. REYNOLDS CENTER FOR HEALTH SCIENCES

ARKANSAS STATE UNIVERSITY

JONESBORO, ARKANSAS

BRACKETT KRENNERICH architects

100 East Huntington, Suite D P.O. Box 1655 Jonesboro, Arkansas 72403-1655
870-932-0571 Fax 870-932-0975 www.bkarchts.com

Commission Number 12406

A402

Date: January 25, 2008

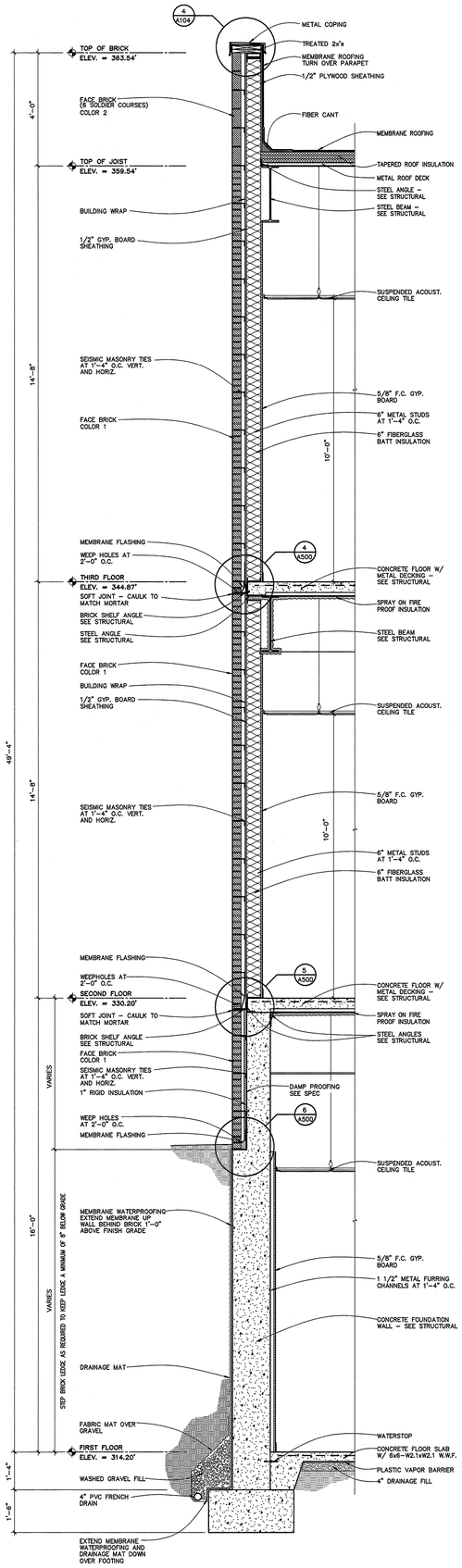

wall section (C)

SCALE: 1/2" = 1'-0"

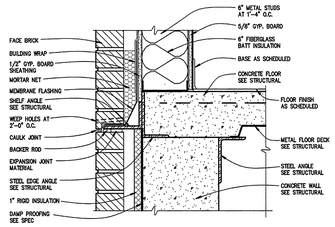

brick shelf detail (5)

SCALE: 1 1/2" = 1'-0"

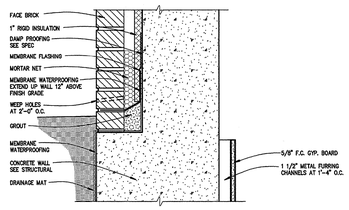

flashing detail (6)

SCALE: 1 1/2" = 1'-0"

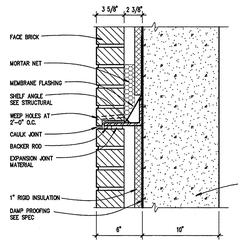

brick shelf detail (7)

SCALE: 1 1/2" = 1'-0"

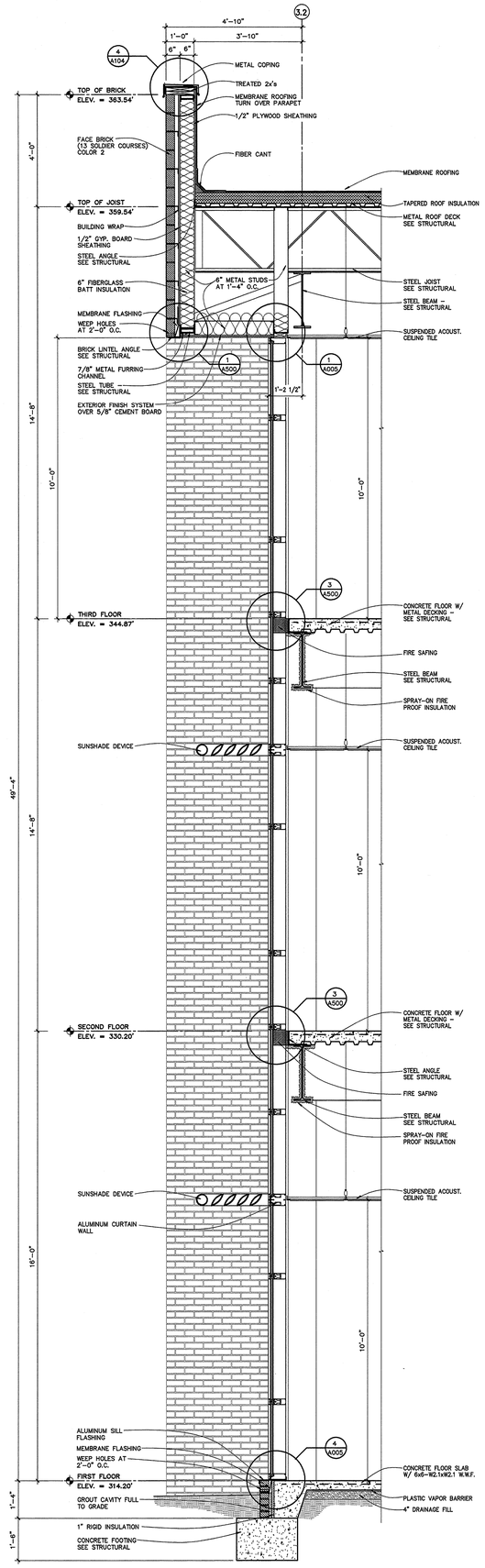

wall section (B)

SCALE: 1/2" = 1'-0"

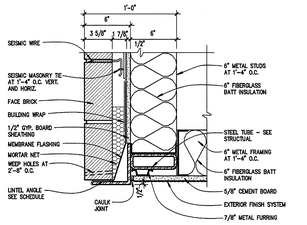

soffit detail (1)

SCALE: 1 1/2" = 1'-0"

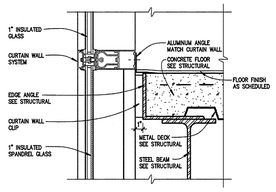

edge detail (2)

SCALE: 1 1/2" = 1'-0"

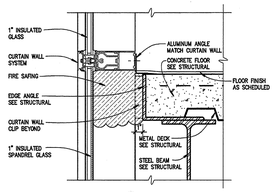

edge detail (3)

W/ FIRE SEPARATION BETWEEN FLOORS SCALE: 1 1/2" = 1'-0"

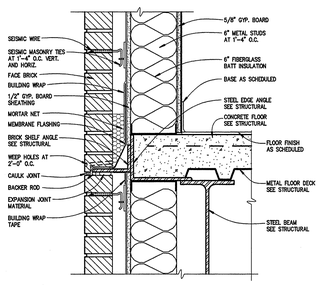

brick shelf detail (4)

SCALE: 1 1/2" = 1'-0"

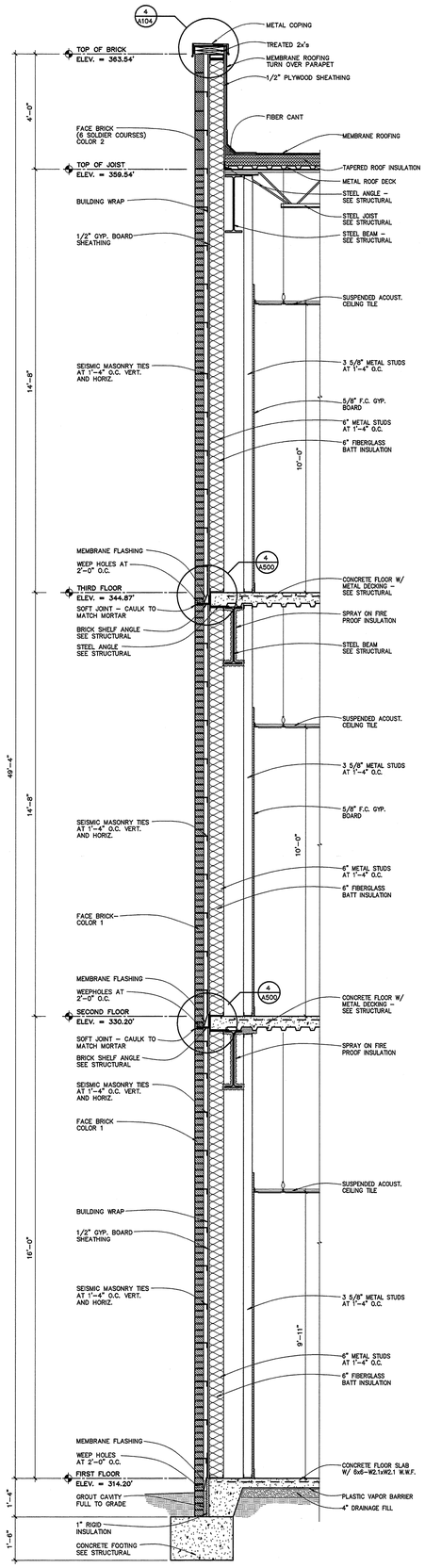

wall section (A)

SCALE: 1/2" = 1'-0"

ASU
ARKANSAS STATE UNIVERSITY

DONALD W. REYNOLDS CENTER FOR HEALTH SCIENCES

ARKANSAS STATE UNIVERSITY
JONESBORO, ARKANSAS

BRACKETT KRENNERICH architects
100 East Huntington, Suite D P.O. Box 16555 Jonesboro, Arkansas 72403-6555
870-932-5571 Fax 870-932-0975 www.bkarchts.com

Commission Number 12406

A500

Date: January 25, 2008

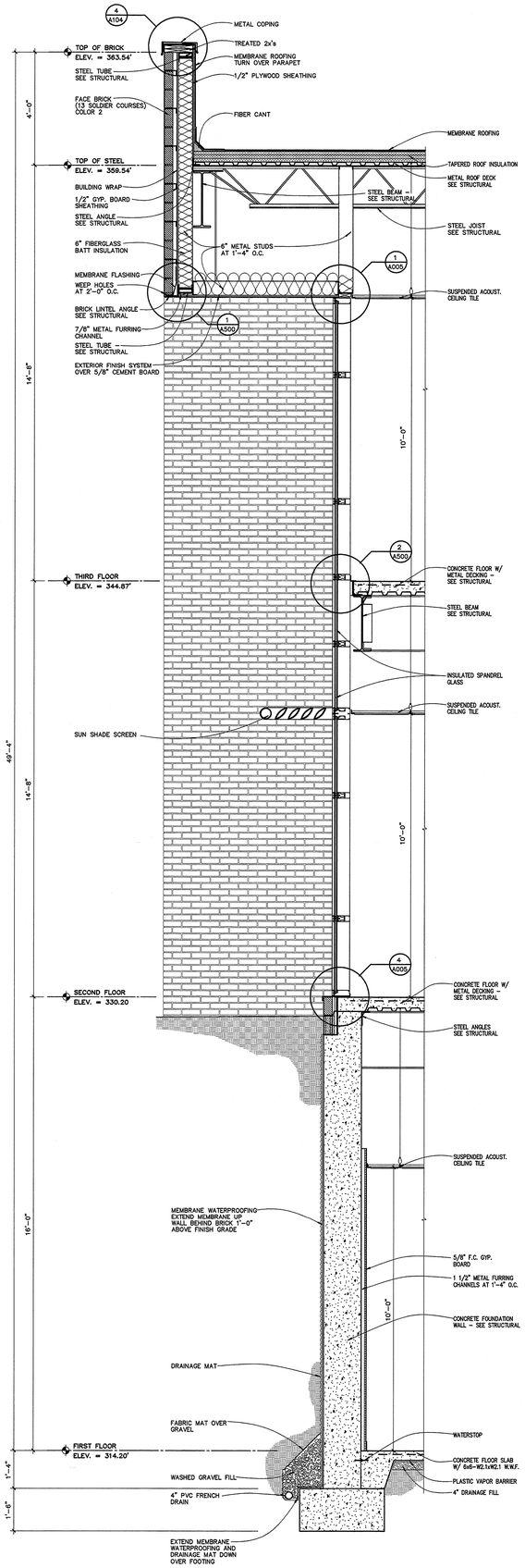

wall section C

SCALE: 1/2" = 1'-0"

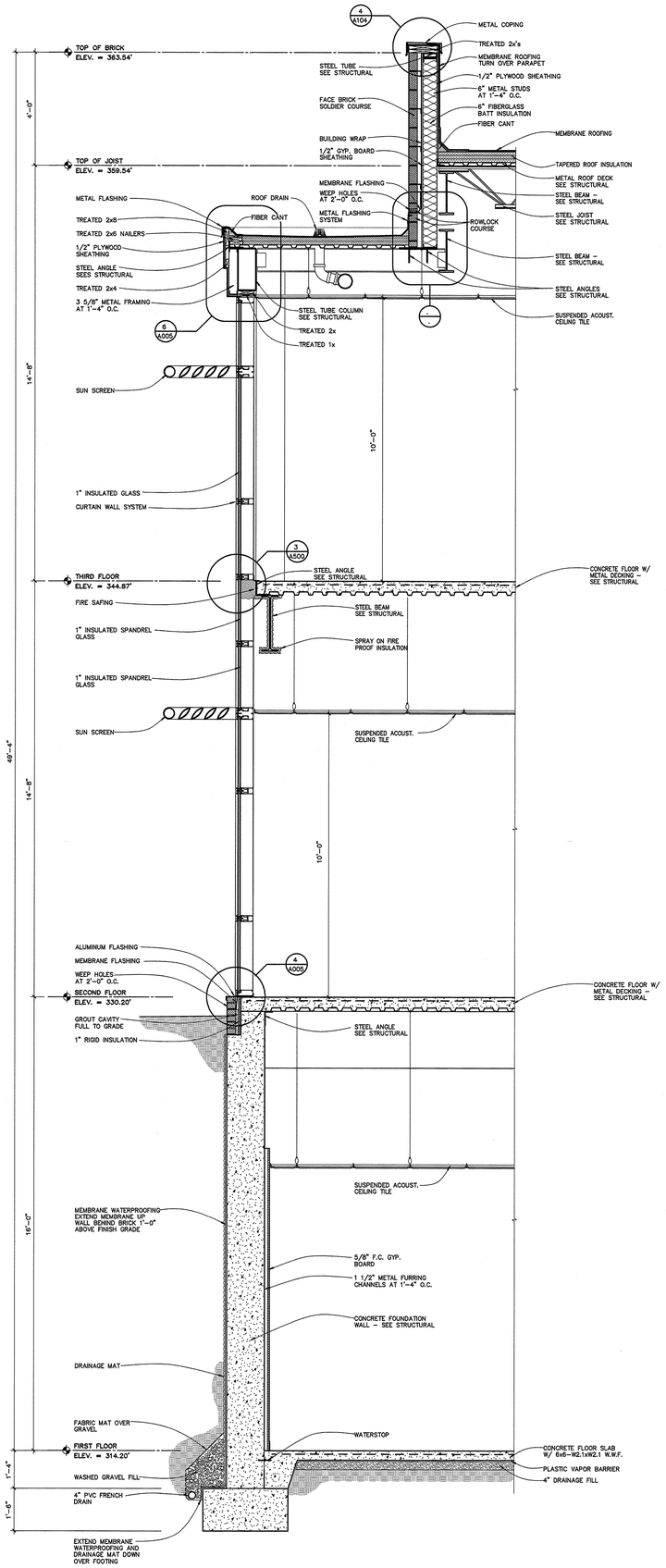

wall section B

SCALE: 1/2" = 1'-0"

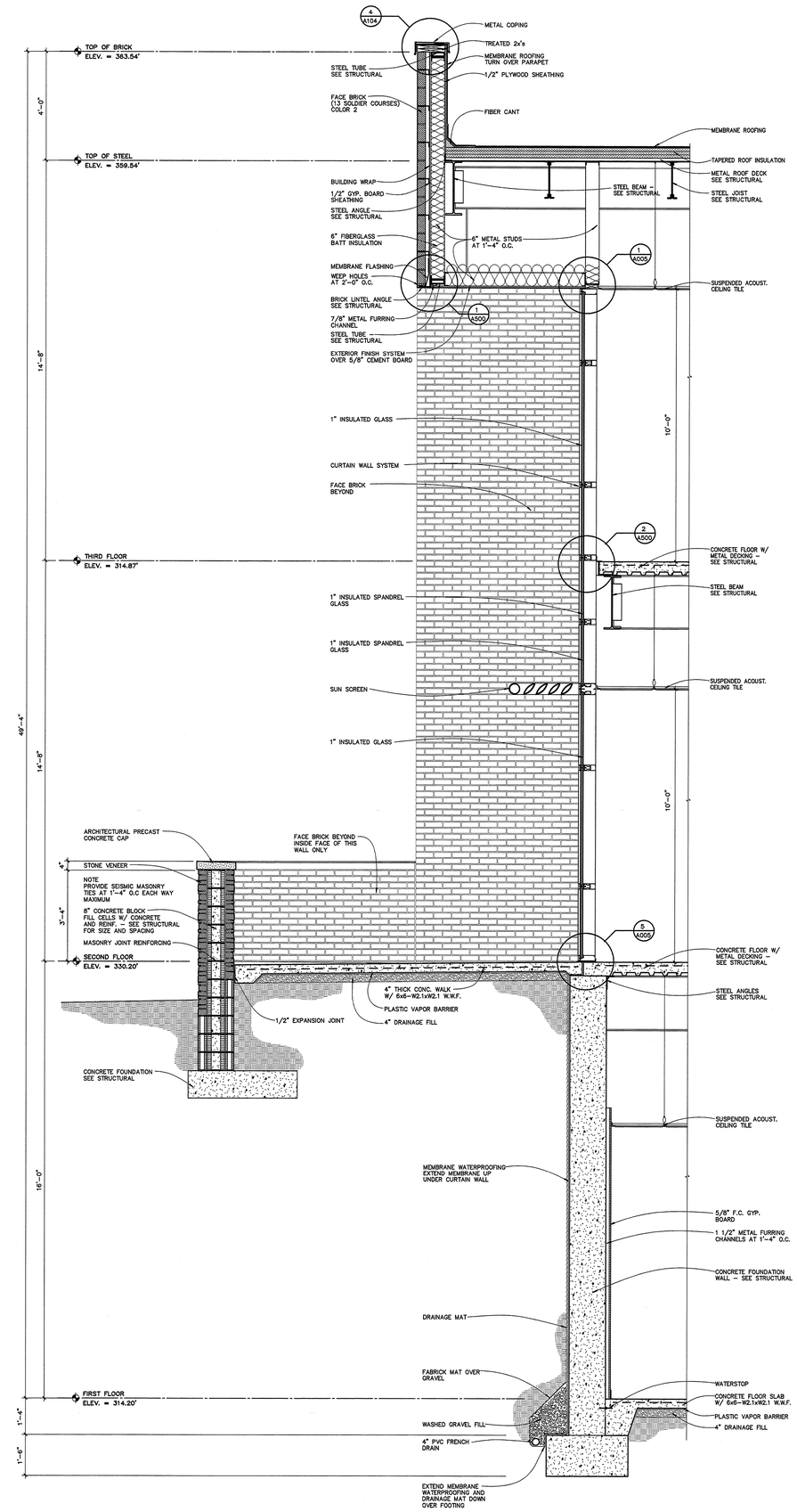

wall section A

SCALE: 1/2" = 1'-0"

ASU
ARKANSAS STATE UNIVERSITY

DONALD W. REYNOLDS CENTER FOR HEALTH SCIENCES

ARKANSAS STATE UNIVERSITY
JONESBORO, ARKANSAS

BRACKETT KRENNERICH architects

100 East Huntington, Suite D · P.O. Box 16555 · Jonesboro, Arkansas 72403-6555
870-932-0571 Fax 870-932-0975 www.bkarchts.com

Commission Number 12406

A501

Date: January 25, 2008

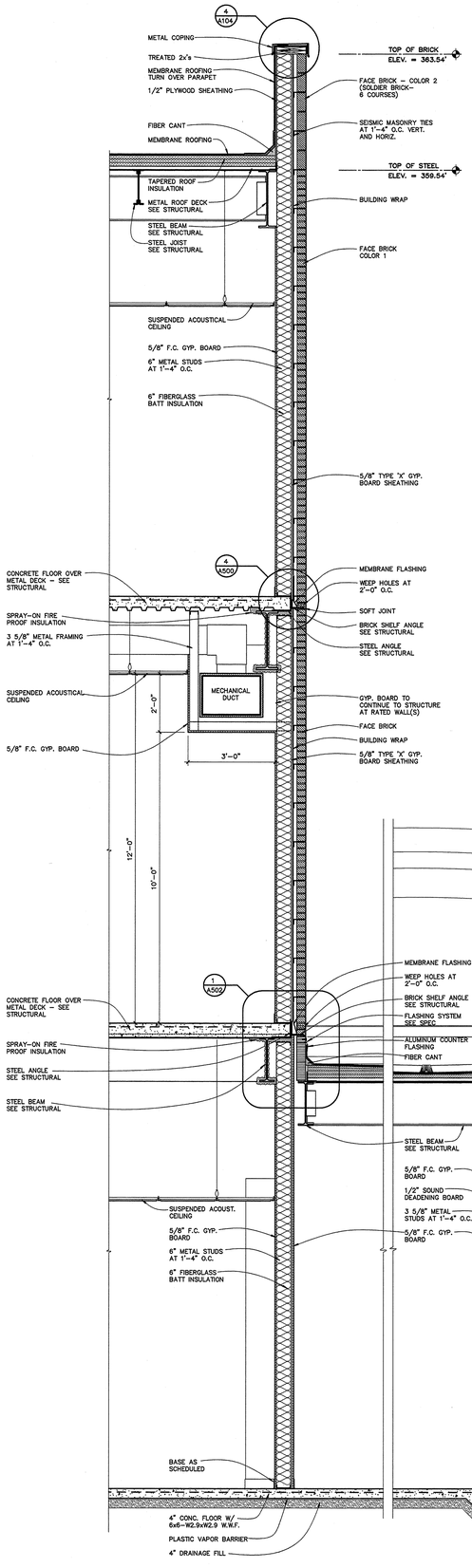

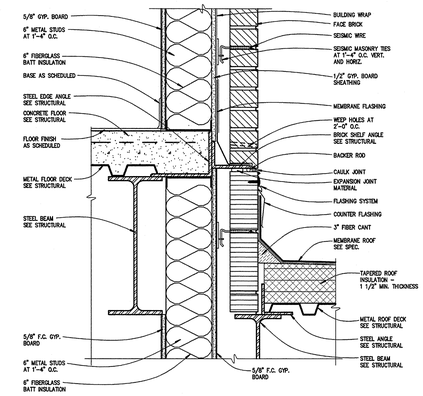

roof detail 1

SCALE: 1 1/2" = 1'-0"

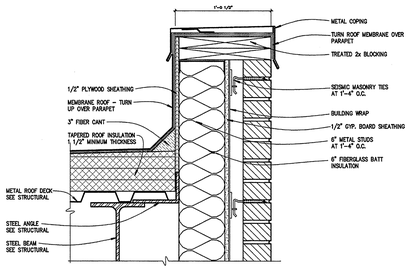

parapet detail 2

SCALE: 1 1/2" = 1'-0"

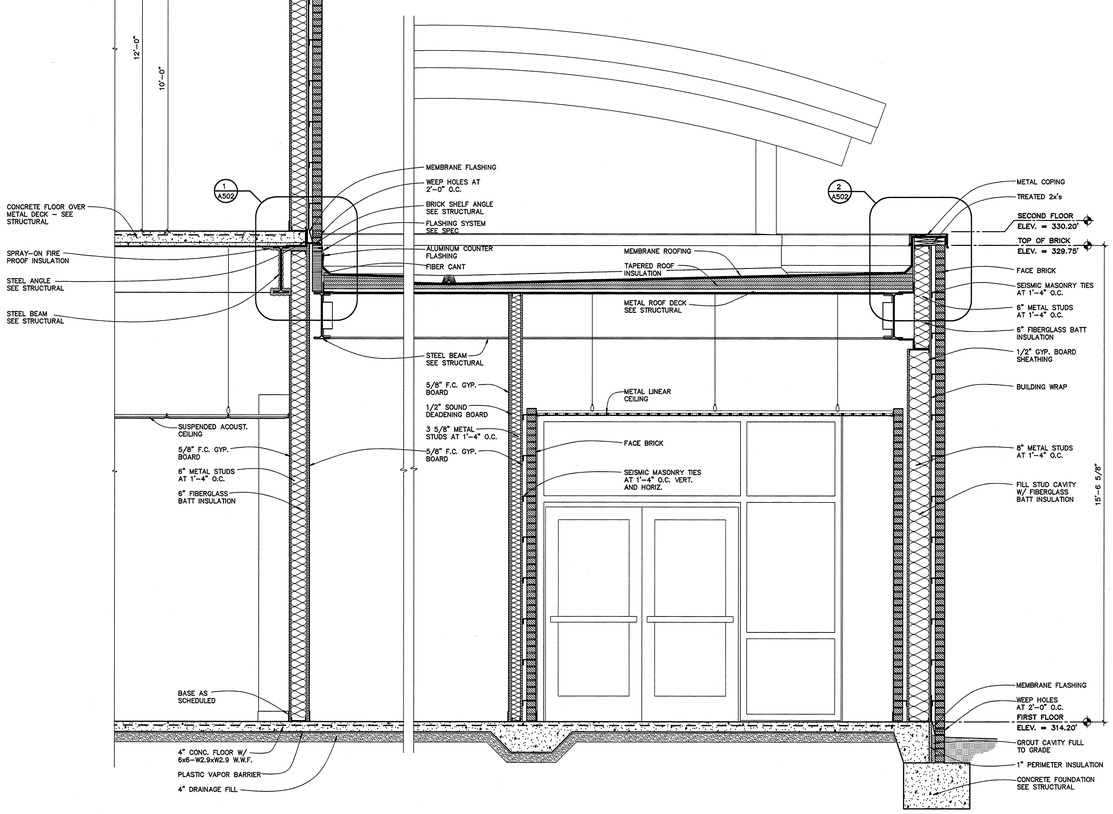

wall section C

SCALE: 1/2" = 1'-0"

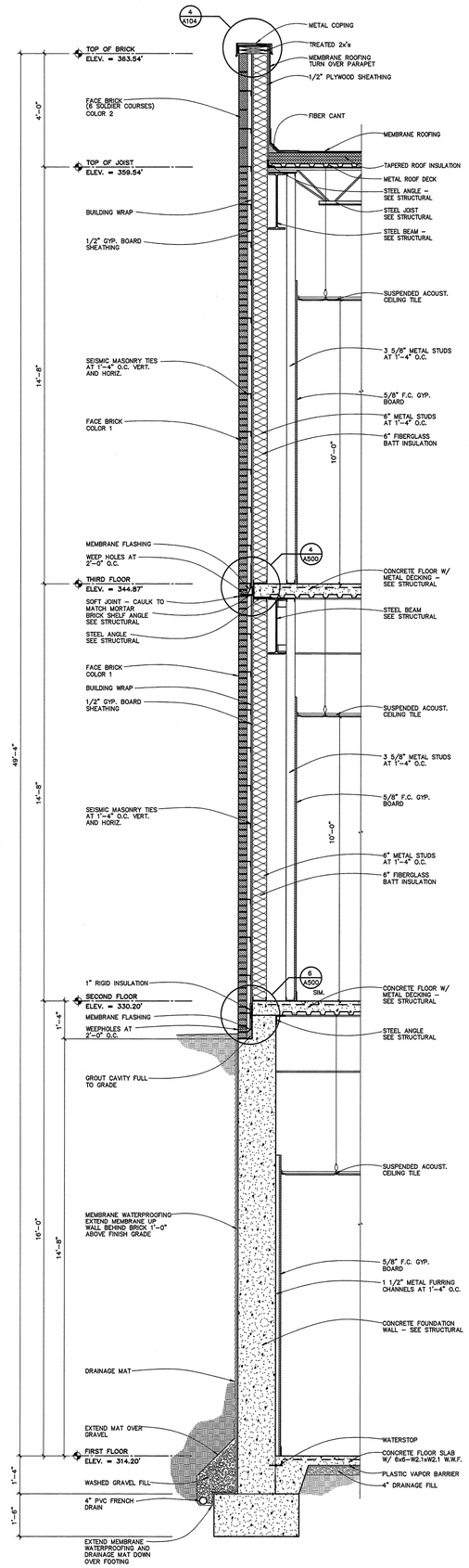

wall section B

SCALE: 1/2" = 1'-0"

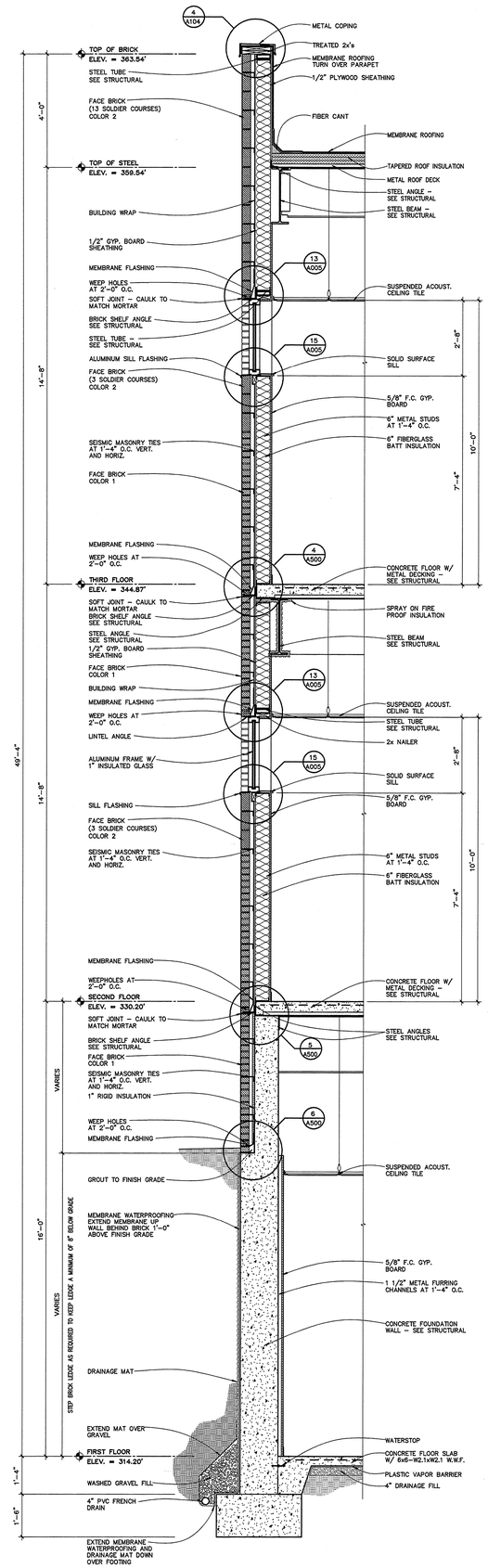

wall section A

SCALE: 1/2" = 1'-0"

ASU ARKANSAS STATE UNIVERSITY

DONALD W. REYNOLDS CENTER FOR HEALTH SCIENCES

ARKANSAS STATE UNIVERSITY

JONESBORO, ARKANSAS

BRACKETT KRENNERICH architects

100 East Huntington, Suite D P.O. Box 1655 Jonesboro, Arkansas 72403-1655

870-932-4571 Fax: 870-932-0975 www.bkarchs.com

Commission Number 12406

A502

Date: January 25, 2008

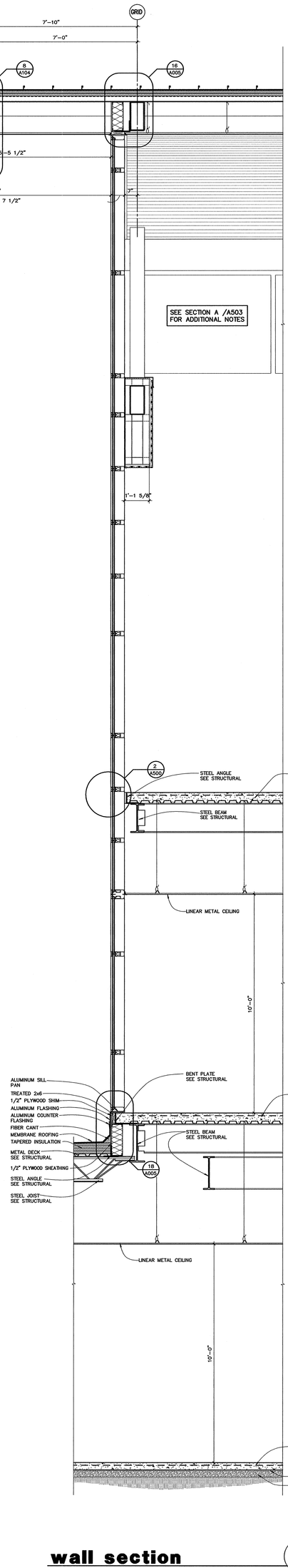

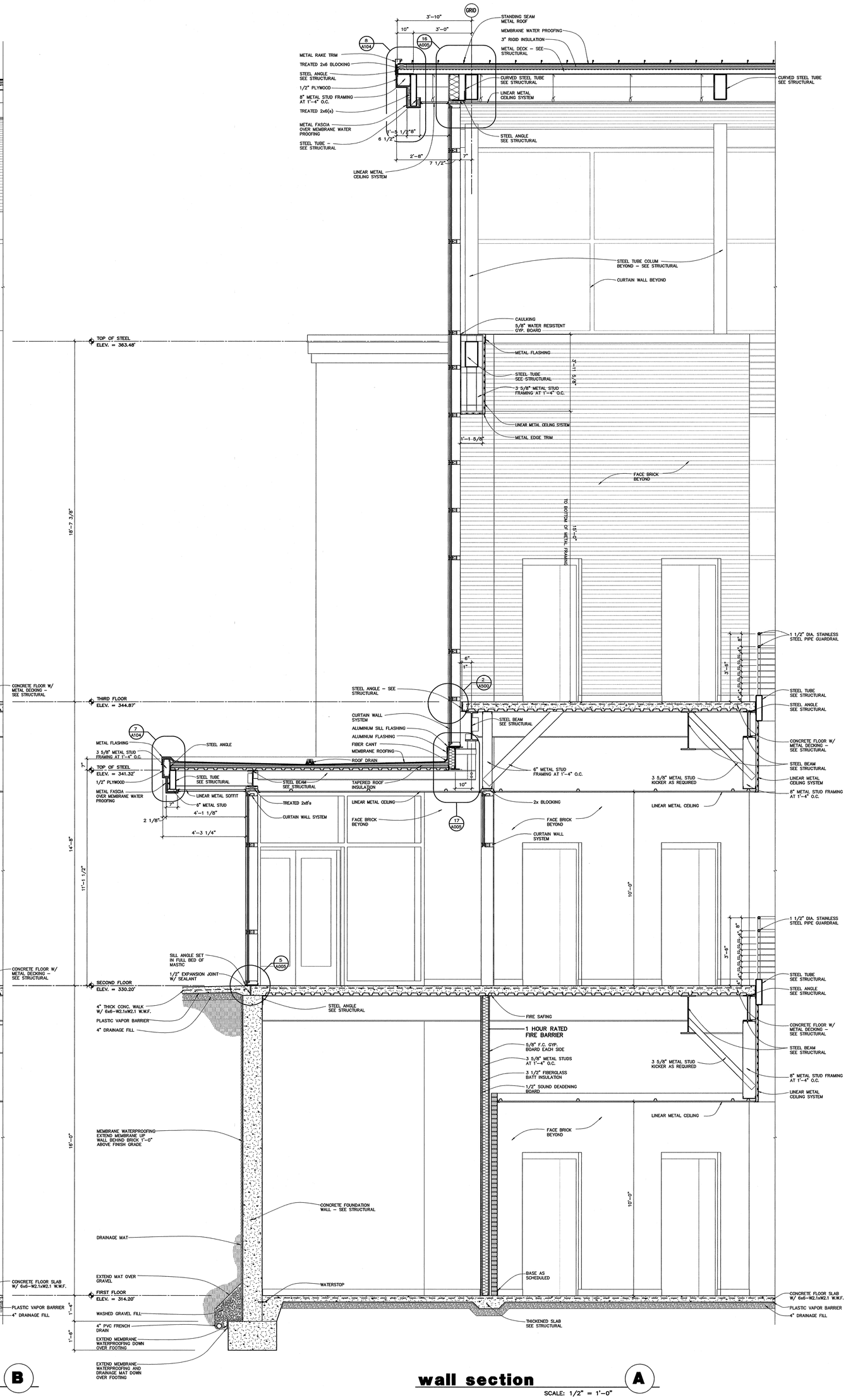

wall section B

SCALE: 1/2" = 1'-0"

wall section A

SCALE: 1/2" = 1'-0"

Commission Number 12408

A503

Date: January 25, 2008

BRACKETT KRENNERICH architects

DONALD W. REYNOLDS CENTER FOR HEALTH SCIENCES

ARKANSAS STATE UNIVERSITY

JONESBORO, ARKANSAS

ARKANSAS STATE UNIVERSITY

100 East Huntington, Suite D P.O. Box 1855 Jonesboro, Arkansas 72403-1855 870-932-0571 Fax 870-932-0975 www.bkarchts.com

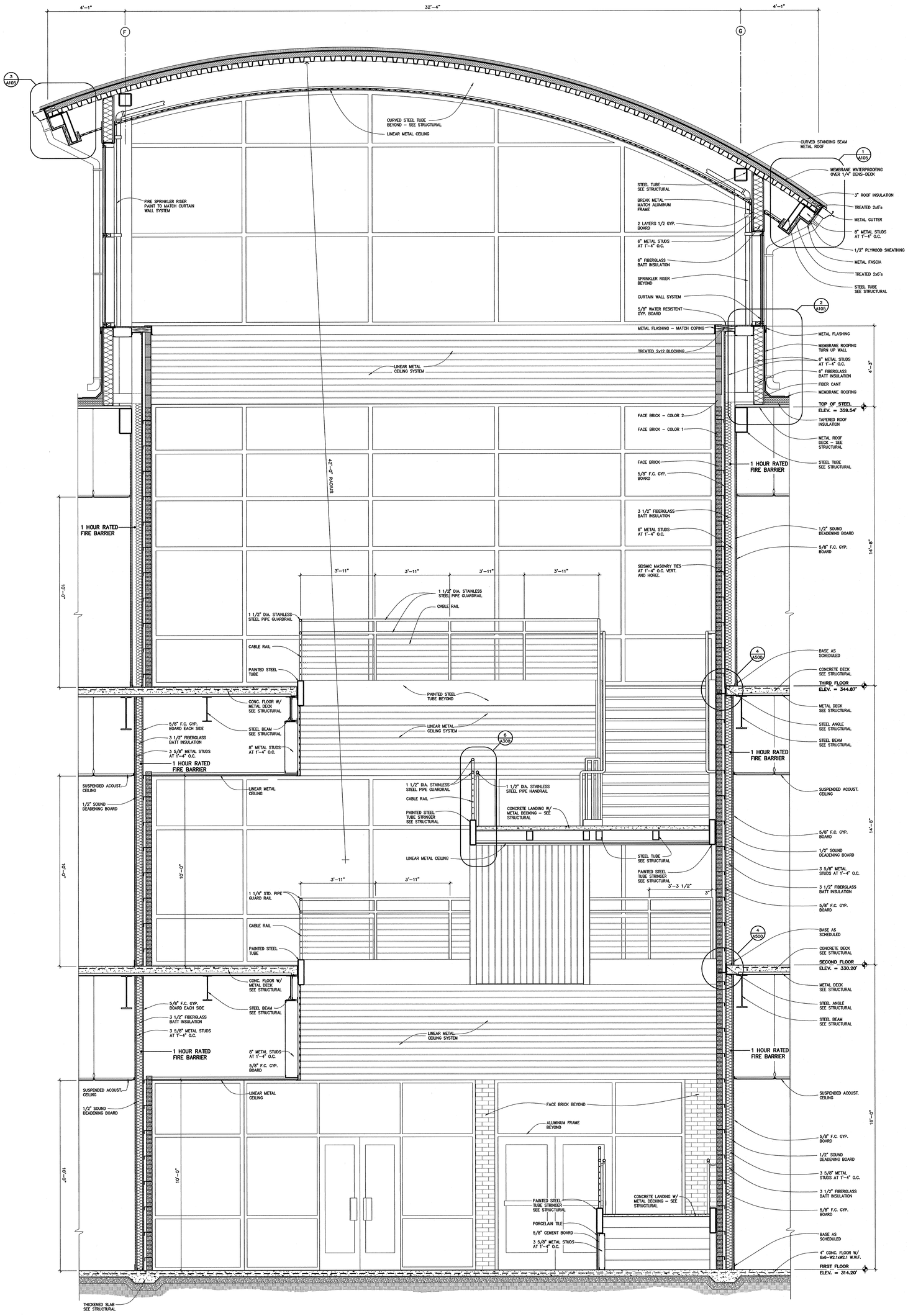

wall section A

SCALE: 1/2" = 1'-0"

BRACKETT KRENNERICH architects

DONALD W. REYNOLDS CENTER FOR HEALTH SCIENCES

ARKANSAS STATE UNIVERSITY

JONESBORO, ARKANSAS

ARKANSAS STATE UNIVERSITY

Commission Number 12406

A504

Date: January 25, 2008

100 East Huntington, Suite D P.O. Box 1655 Jonesboro, Arkansas 72403-1655 870-932-0571 Fax 870-932-0975 www.bkarchts.com

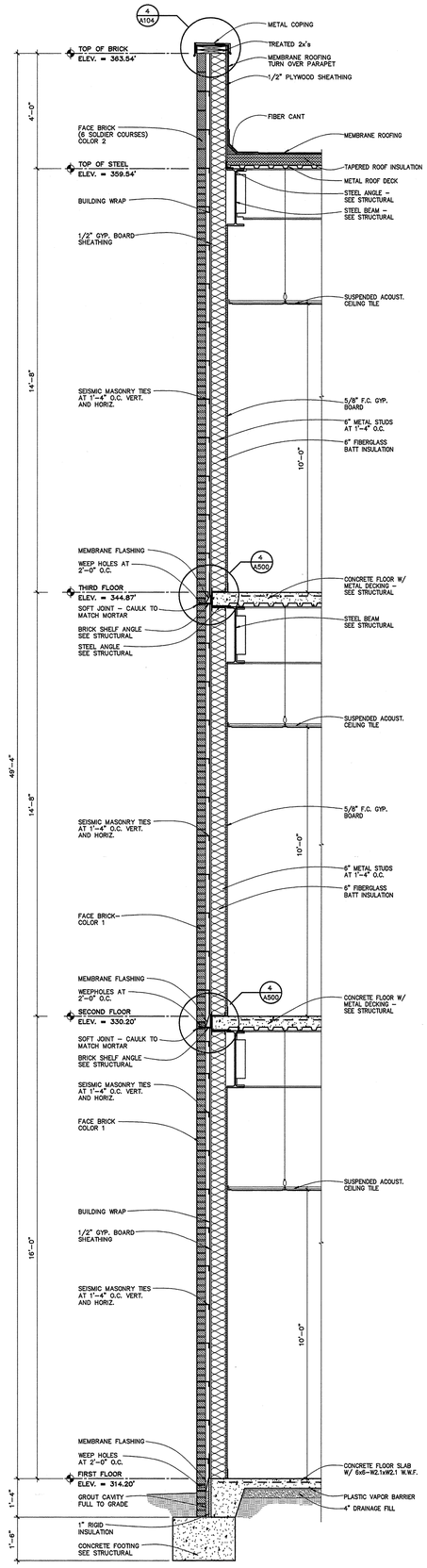

wall section C

SCALE: 1/2" = 1'-0"

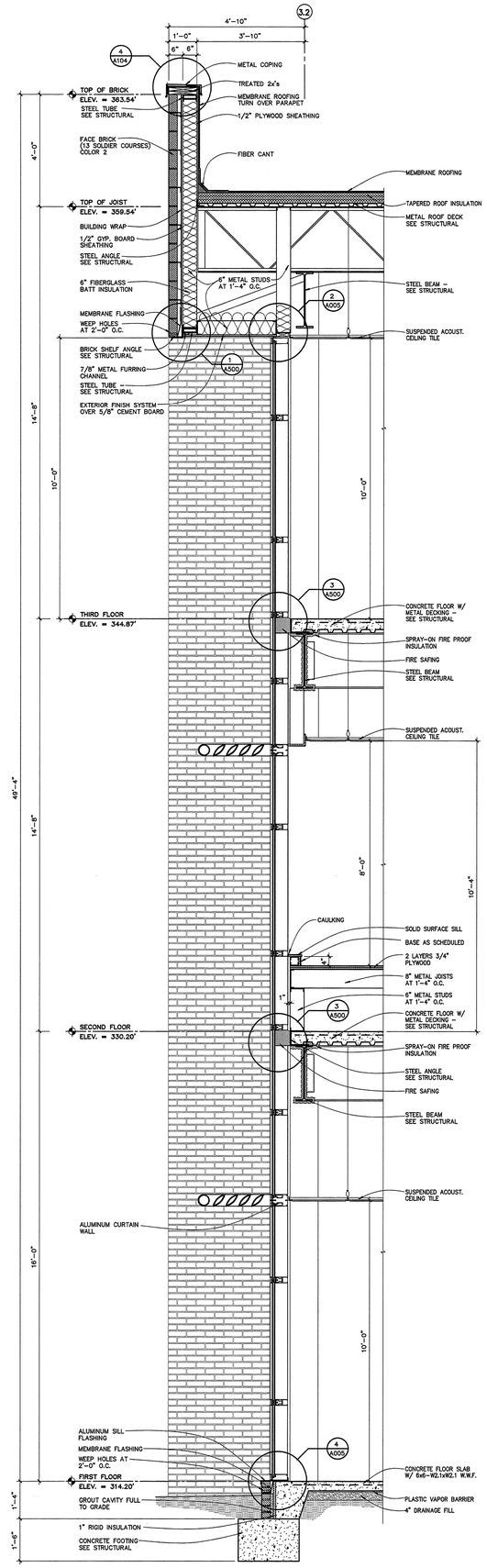

wall section B

SCALE: 1/2" = 1'-0"

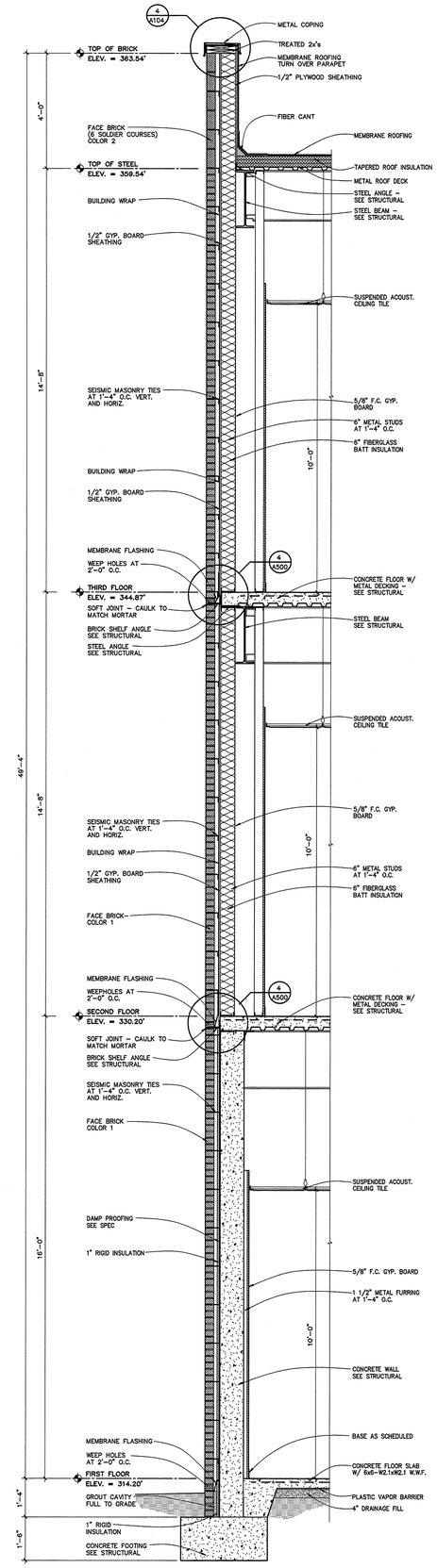

wall section A

SCALE: 1/2" = 1'-0"

ASU
ARKANSAS STATE UNIVERSITY

DONALD W. REYNOLDS CENTER FOR HEALTH SCIENCES

ARKANSAS STATE UNIVERSITY
JONESBORO, ARKANSAS

BRACKETT KRENNERICH architects
100 East Huntington, Suite D P.O. Box 1655 Jonesboro, Arkansas 72403-1655
870-932-4571 Fax 870-932-0975 www.bkarchs.com

Commission Number 12406

A505

Date: January 25, 2008

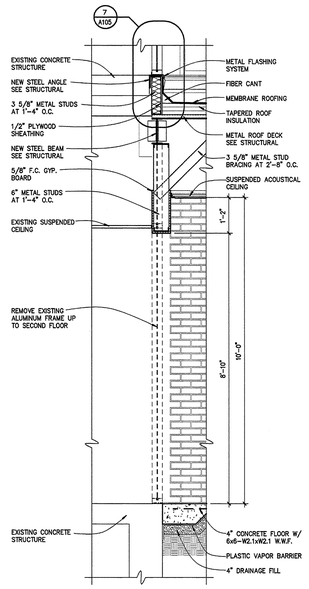

wall section G

SCALE: 1/2" = 1'-0"

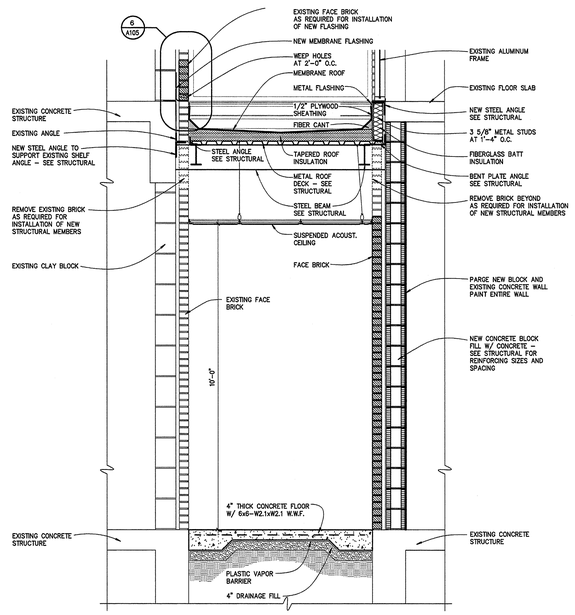

wall section F

SCALE: 1/2" = 1'-0"

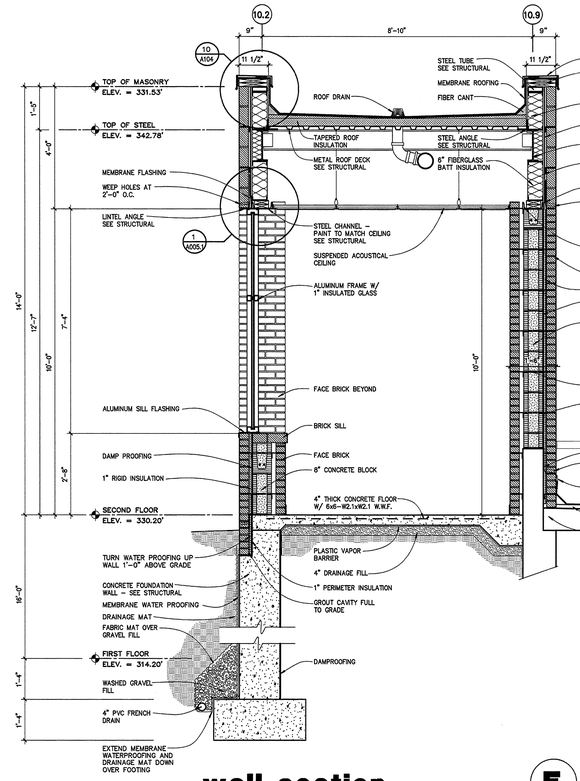

wall section E

SCALE: 1/2" = 1'-0"

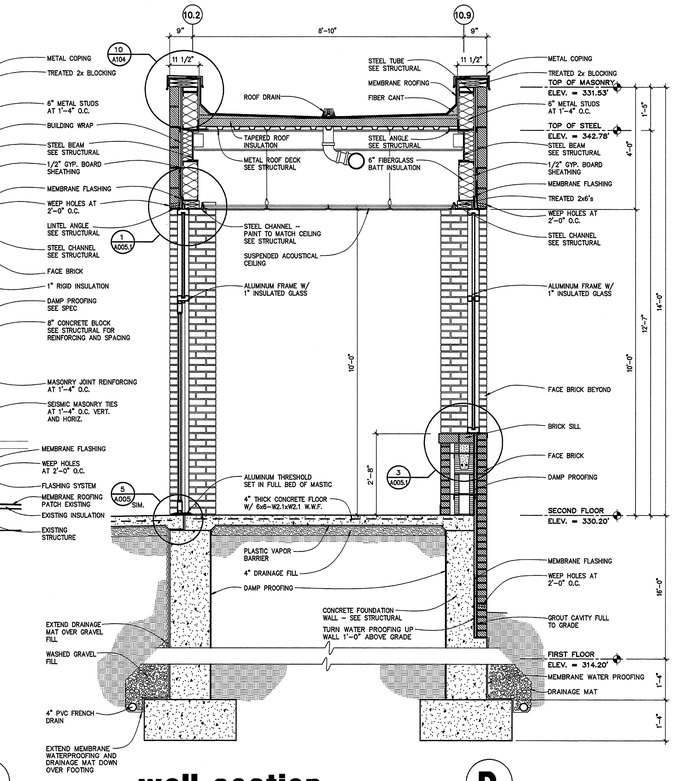

wall section D

SCALE: 1/2" = 1'-0"

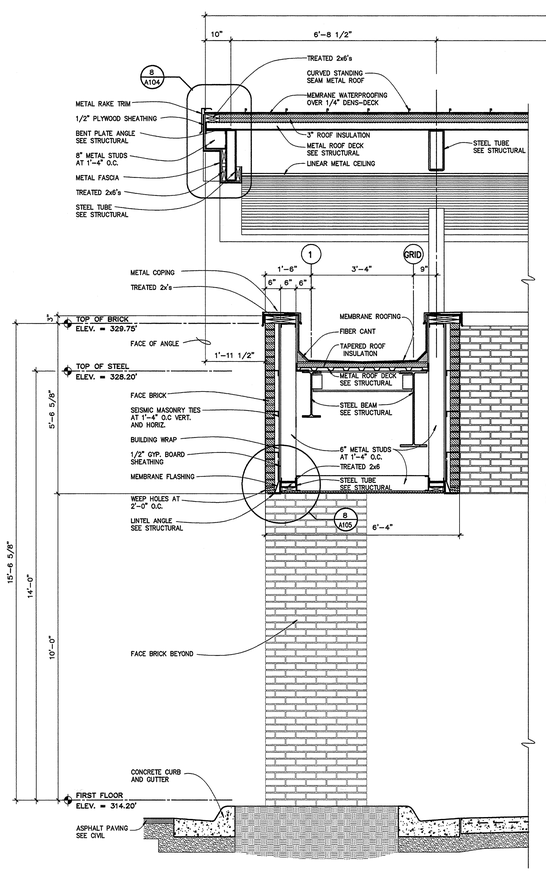

wall section C

SCALE: 1/2" = 1'-0"

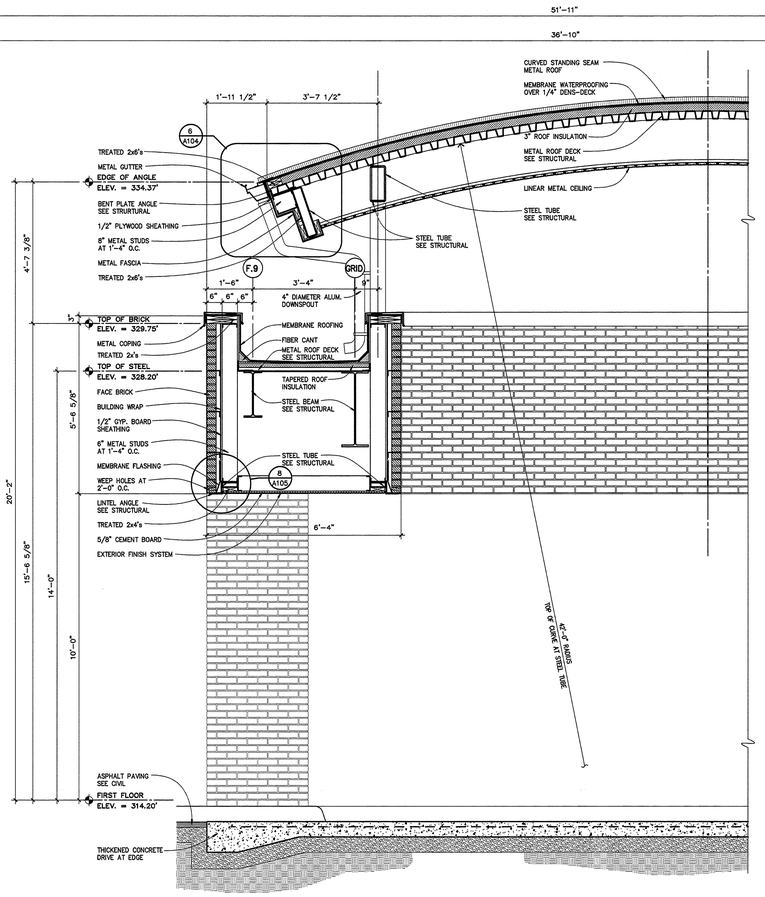

wall section B

SCALE: 1/2" = 1'-0"

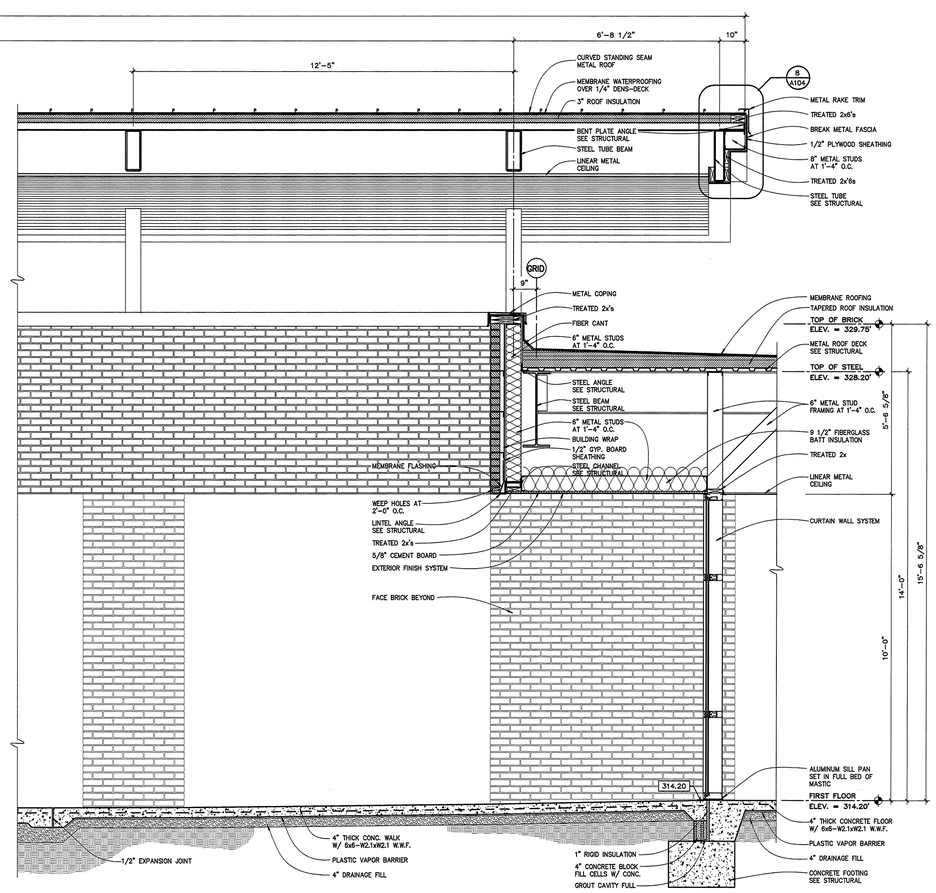

wall section A

SCALE: 1/2" = 1'-0"

ASU
ARKANSAS STATE UNIVERSITY

DONALD W. REYNOLDS CENTER FOR HEALTH SCIENCES

ARKANSAS STATE UNIVERSITY
JONESBORO, ARKANSAS

BRACKETT KRENNERICH architects
100 East Huntington, Suite D P.O. Box 1655 Jonesboro, Arkansas 72403-1655
870-932-4571 Fax: 870-932-9975 www.bkarchts.com

Commission Number 12406

A506

Date: January 25, 2008

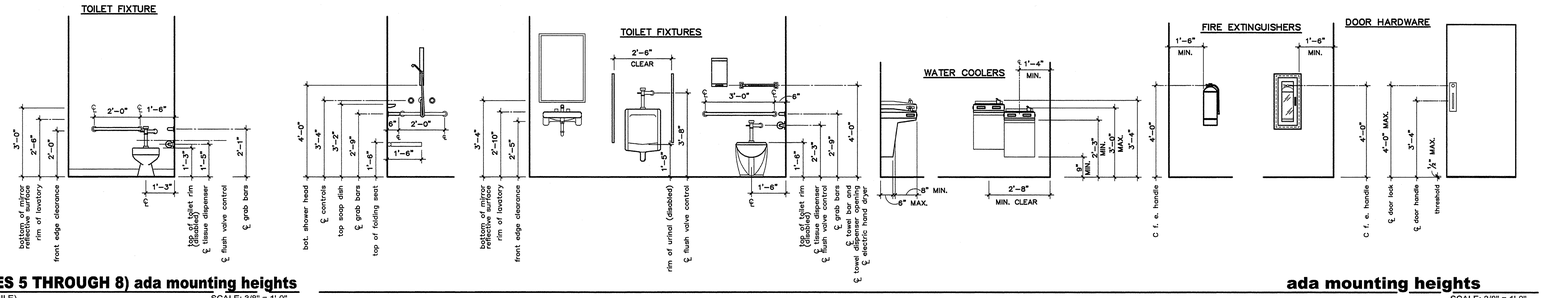

(AGES 5 THROUGH 8) ada mounting heights
(JUVENILE)
SCALE: 3/8" = 1'-0"

ada mounting heights
SCALE: 3/8" = 1'-0"

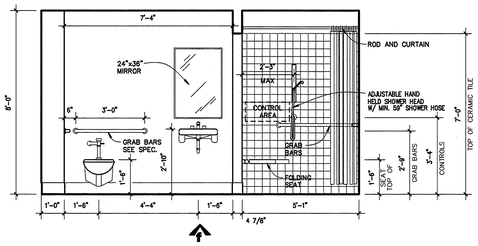

toilet 179

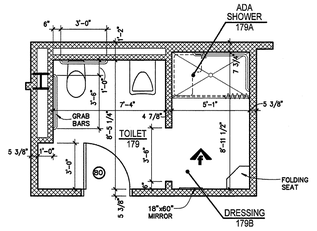

n **enlarged shower plan**
SCALE: 1/4" = 1'-0"

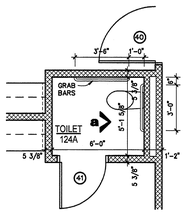

n **enlarged toilet plan**
SCALE: 1/4" = 1'-0"

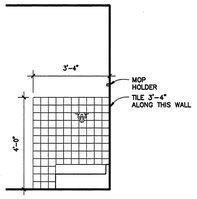

janitors sink
HOUSE KEEPING (TYP.)

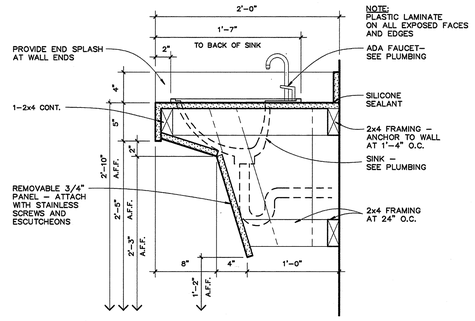

typical counter section (1)
SCALE: 1 1/2" = 1'-0"

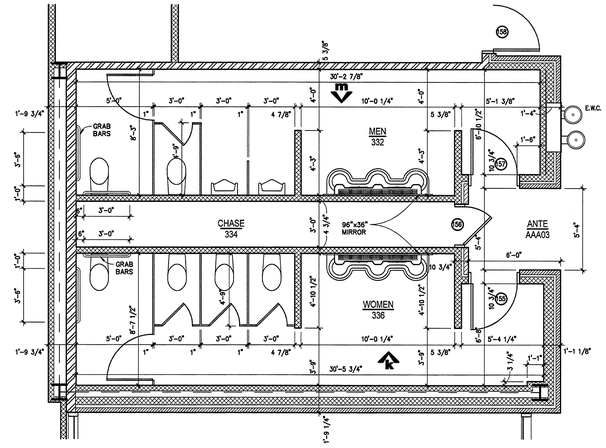

n **enlarged toilet plan**
SCALE: 1/4" = 1'-0"

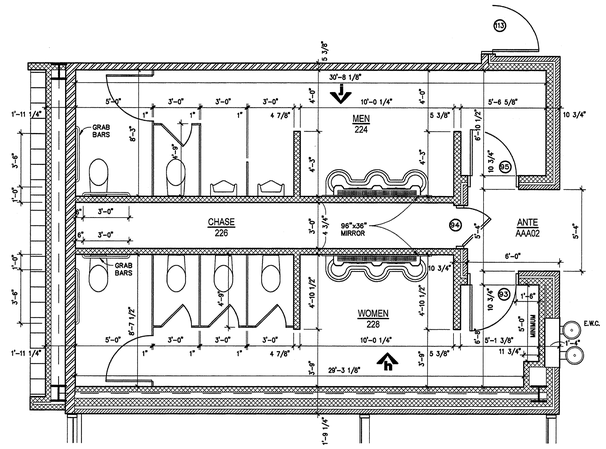

n **enlarged toilet plan**
SCALE: 1/4" = 1'-0"

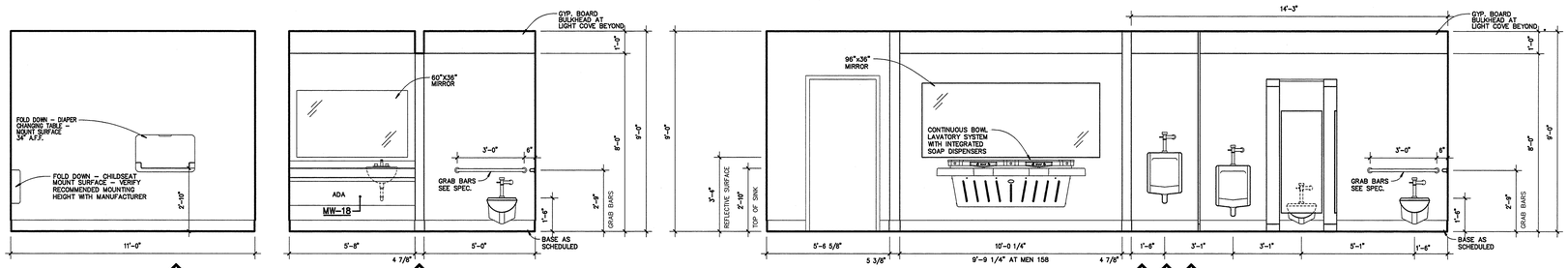

family restroom 164

NOTE:
FLUSH VALVES TO BE LOCATED ON OPEN SIDE OF STALL (OPPOSITE OF WALL) TYPICAL AT ALL WATER CLOSETS

men 158, 224, 332

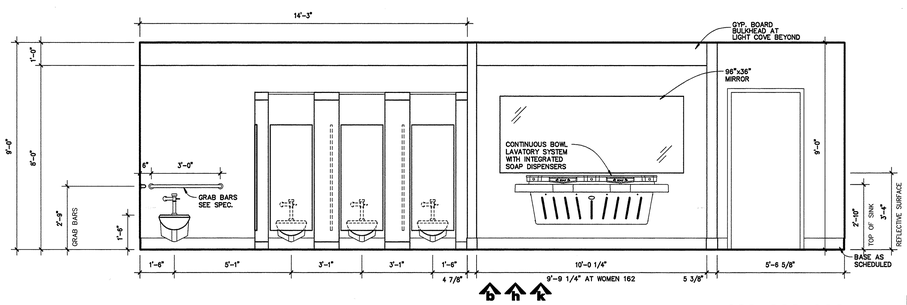

women 162, 228, 336

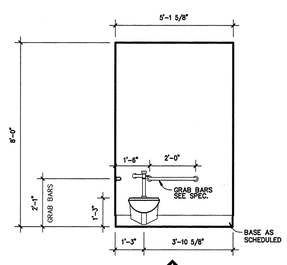

NOTE:
FLUSH VALVES TO BE LOCATED ON OPEN SIDE OF STALL (OPPOSITE OF WALL) TYPICAL AT ALL WATER CLOSETS

toilet 124A
CHILDRENS ADA TOILET (AGES 5 THROUGH 8)

toilet elevations
SCALE: 3/8" = 1'-0"

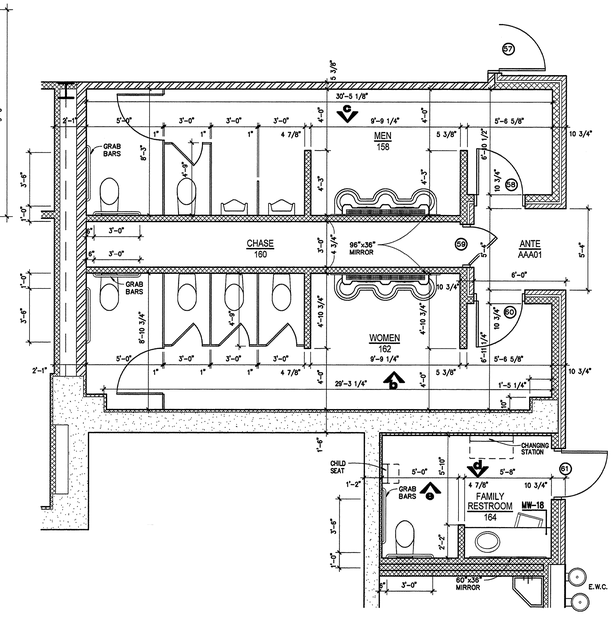

n **enlarged toilet plan**
SCALE: 1/4" = 1'-0"

ARKANSAS STATE UNIVERSITY

DONALD W. REYNOLDS CENTER FOR HEALTH SCIENCES
ARKANSAS STATE UNIVERSITY
JONESBORO, ARKANSAS

BRACKETT KRENNERICH architects
100 East Huntington, Suite D P.O. Box 1655 Jonesboro, Arkansas 72403-1655
870-932-0571 Fax: 870-932-0975 www.bkarchs.com

Commission Number 12406
A600
Date: January 25, 2008

S:\Projects\Current\ASU Reynolds Center for Health Sciences\Working Drawings\A600Wednesday, January 23, 2008 Steve

ARKANSAS STATE UNIVERSITY

DONALD W. REYNOLDS CENTER FOR HEALTH SCIENCES

ARKANSAS STATE UNIVERSITY
JONESBORO, ARKANSAS

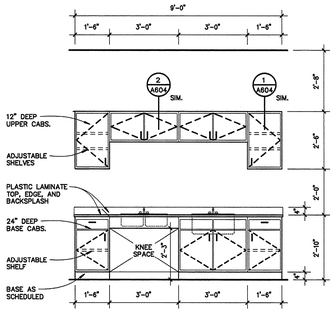

millwork no. 20

RESEARCH LAB 175

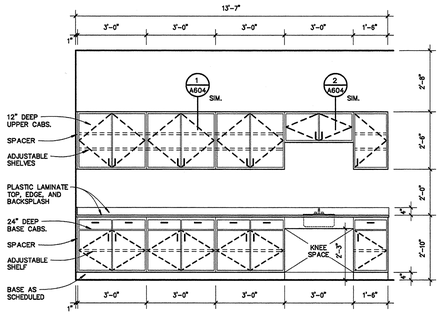

millwork no. 19,21 OPP. HAND

RESEARCH LAB 171
RESEARCH LAB 177

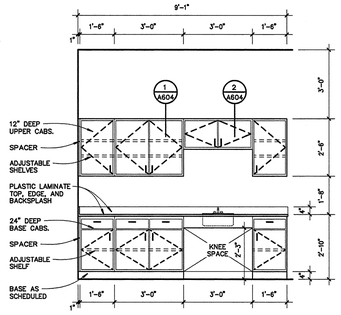

millwork no. 17

AUDIOLOGY LAB 122

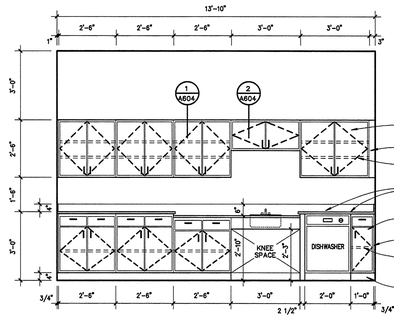

millwork no. 16

PEDIATRIC LANGUAGE LAB 124

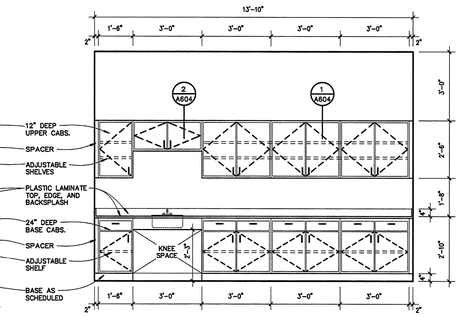

millwork no. 15

GERIATRIC SPEECH/LANGUAGE LAB 126

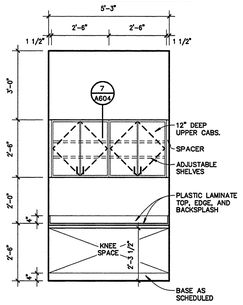

millwork no. 13A, 13B, 13C, 13D
millwork no. 14A, 14B, 14C, 14D

THERAPY/TREATMENT ROOM 106,107,112,113,115,133
AURAL REHAB LAB 121,
ARTICULATION LAB 127

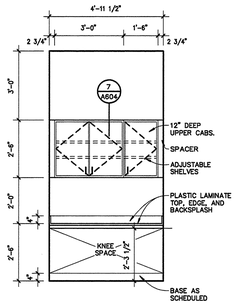

millwork no. 11A, 11B, 12A, 12B

THERAPY/TREATMENT ROOM 134,136,142
ACCENT REDUCTION LAB 128

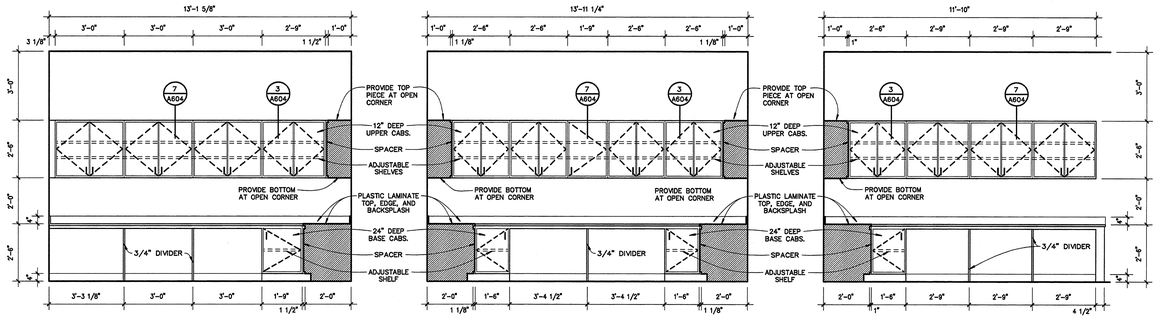

millwork no. 10

REMOTE VIDEO OBSERVATION ROOM 144

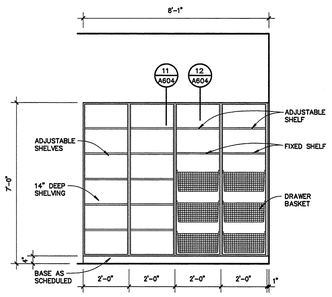

millwork no. 8, 9

LIBRARY 146

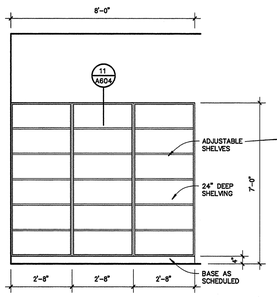

millwork no. 7

LIBRARY 146

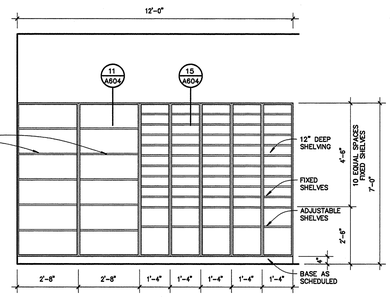

millwork no. 6

LIBRARY 146

omitted

millwork no. 5

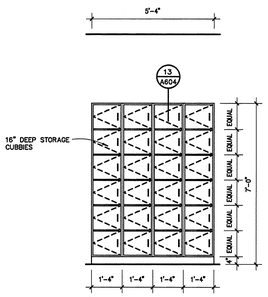

millwork no. 4

STUDENT WORK ROOM 102

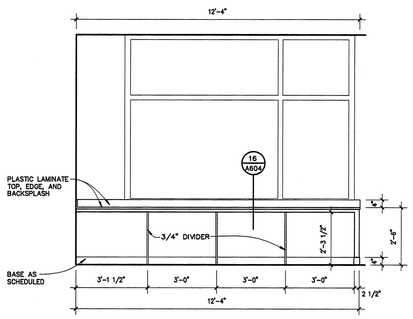

millwork no. 3

STUDENT WORK ROOM 102

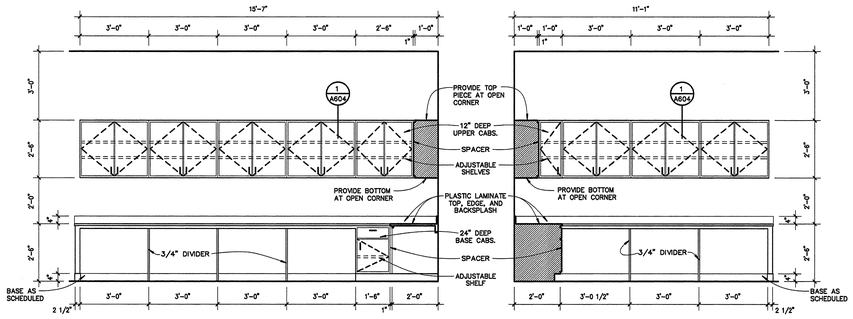

millwork no. 2

STUDENT WORK ROOM 102

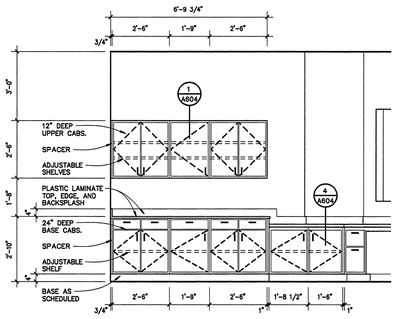

WORK/COPY RECEPTION 147

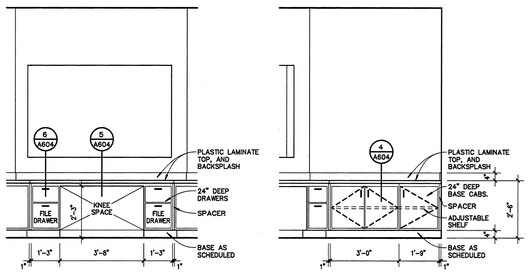

millwork no. 1

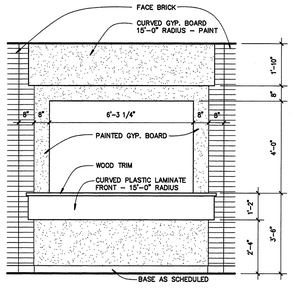

millwork no. 1

CLIENT WAITING 101

millwork elevations

SCALE: 3/8" = 1'-0"

Commission Number 12406

A601

Date: January 25, 2008

BRACKETT KRENNERICH architects
100 East Huntington, Suite D P.O. Box 1655 Jonesboro, Arkansas 72403-1655
870-932-0571 Fax 870-932-0975 www.bkarchs.com

S:\Projects\Current\X50 Reynolds Center for Health Sciences\Working Drawings\A601Millwork\Elev.dwg Wednesday, January 23, 2008 Steve

ARKANSAS STATE UNIVERSITY

DONALD W. REYNOLDS CENTER FOR HEALTH SCIENCES

ARKANSAS STATE UNIVERSITY

JONESBORO, ARKANSAS

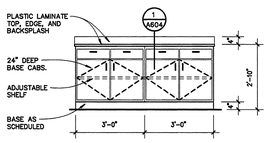

millwork no. 31

NURSE ANESTHETIST LABORATORY 303

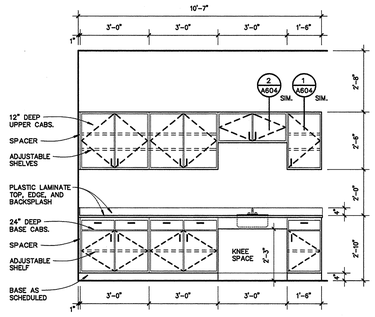

millwork no. 30

NURSE ANESTHETIST LABORATORY 303

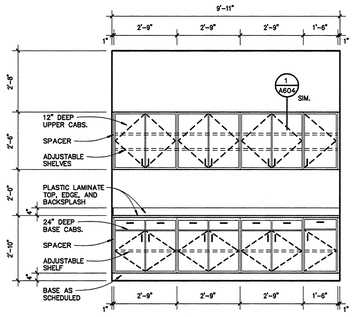

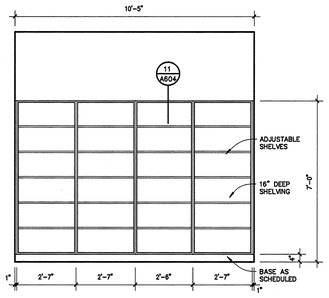

millwork no. 29

SECRETARY 305

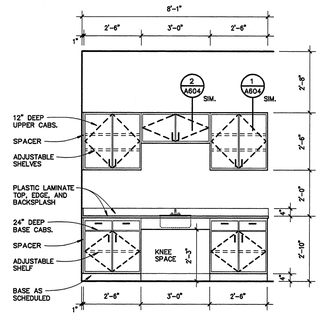

millwork no. 28

SPECIAL PROJECTS LAB 320

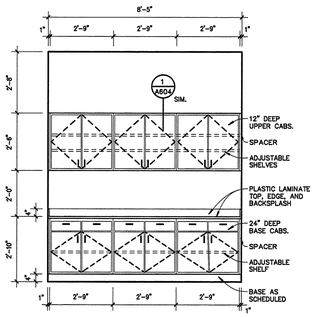

millwork no. 27

STORAGE 320A

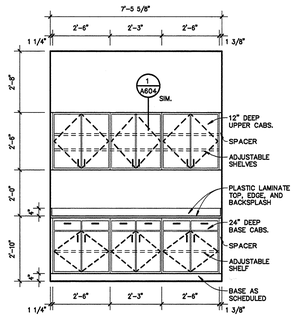

millwork no. 26

STORAGE 322A

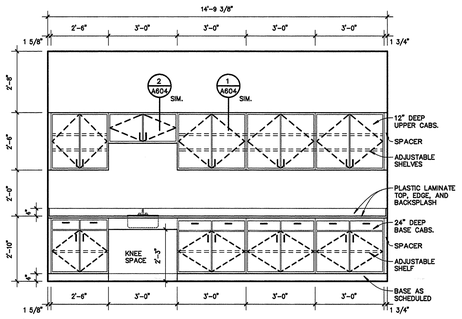

millwork no. 25

SPECIAL PROJECTS LAB 322

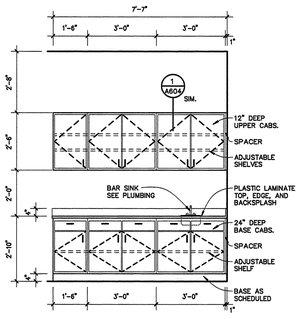

millwork no. 24

RECEPTION/WAITING 211

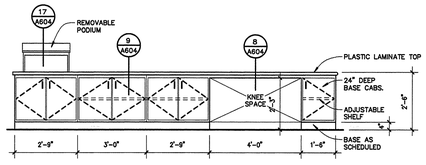

millwork no. 23

COMPUTER LAB 214

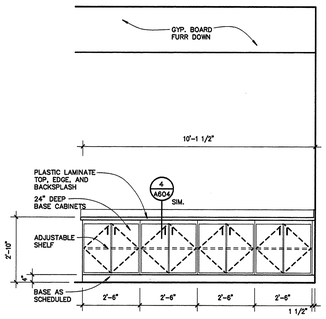

millwork no. 22

COMPUTER LAB 214

millwork elevations

SCALE: 3/8" = 1'-0"

Commission Number 12406

A602

Date: January 25, 2008

BRACKETT KRENNERICH architects

100 East Huntington, Suite D P.O. Box 1655 Jonesboro, Arkansas 72403-1655

870-932-0571 Fax 870-932-0975 www.bkarchs.com

S:\Projects\Current\ASU Renolds Center for Health Sciences\Working Drawings\A602MillworkElev.dwg Wednesday, January 23, 2008 Steve

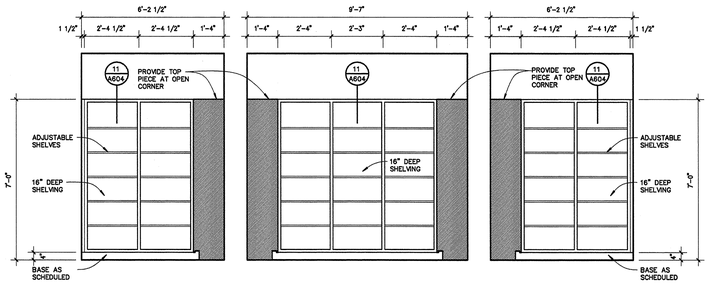

STORAGE 329A

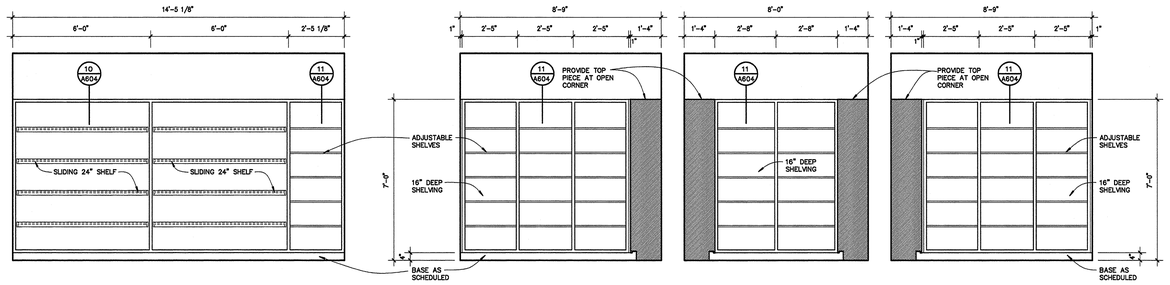

LARGE EQUIPMENT STORAGE 324D

STORAGE 325A

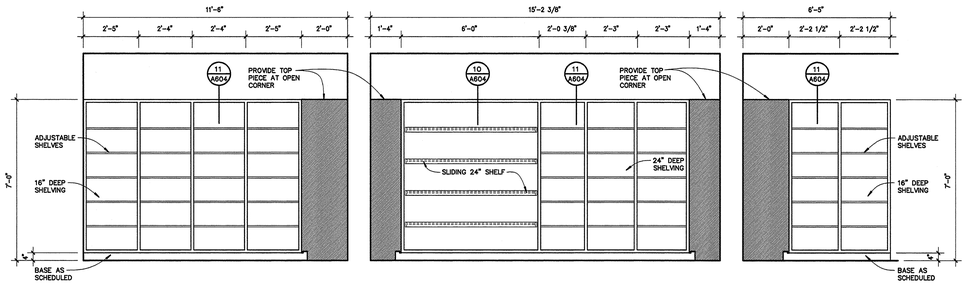

EQUIPMENT STORAGE 303A

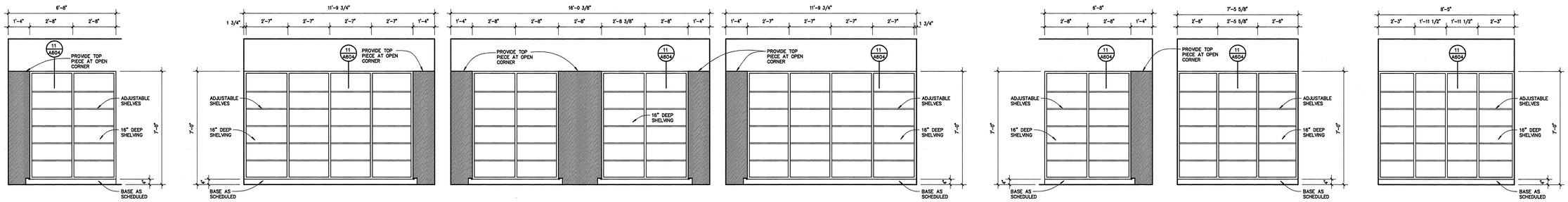

SMALL EQUIPMENT STORAGE 324C

STORAGE 322A

STORAGE 320A

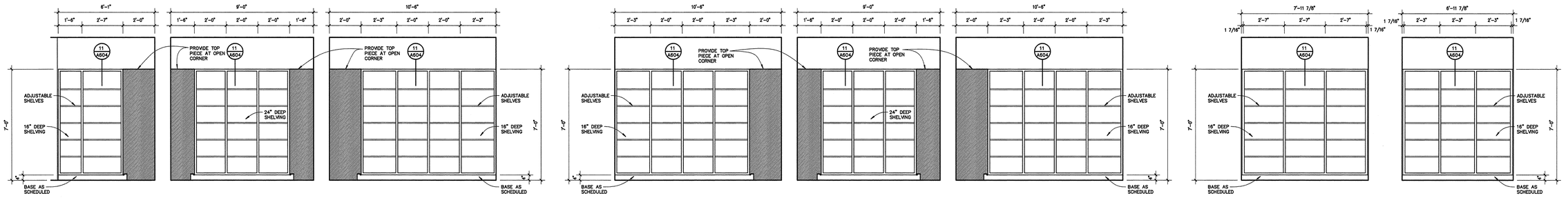

STORAGE 175B

STORAGE 171A

STORAGE 151A

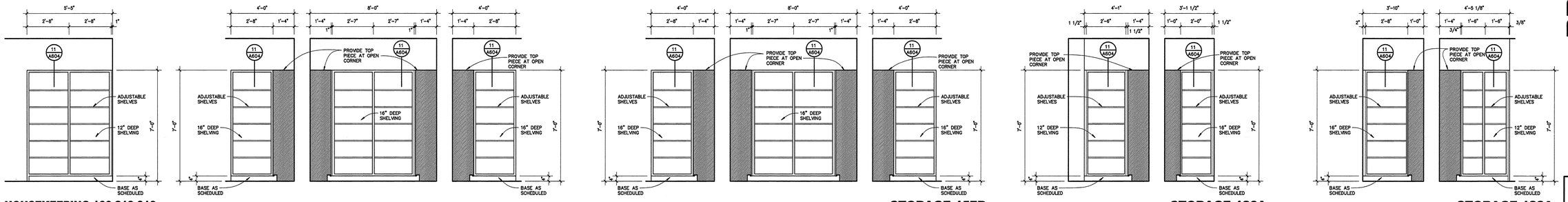

HOUSEKEEPING 166,213,318

STORAGE 157B

STORAGE 126A

STORAGE 122A

shelving elevations

SCALE: 3/8" = 1'-0"

ARKANSAS STATE UNIVERSITY

DONALD W. REYNOLDS CENTER FOR HEALTH SCIENCES

ARKANSAS STATE UNIVERSITY

JONESBORO, ARKANSAS

BRACKETT KRENNERICH architects

100 East Huntington, Suite D P.O. Box 1655 Jonesboro, Arkansas 72403-1655

870-932-0571 Fax 870-932-0975 www.bkarchs.com

Commission Number 12406

A603

Date: January 25, 2008

S:\Projects\Current\ASU Reynolds Center for Health Sciences\Working Drawings\A603ShelvingElev.dwg Wednesday, January 23, 2008 Steve

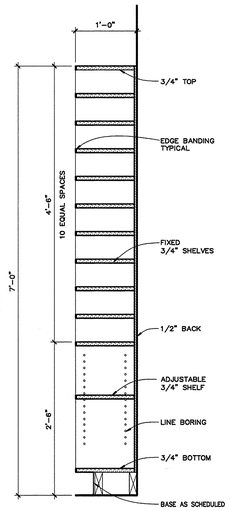

shelf section 15
SCALE: 1" = 1'-0"

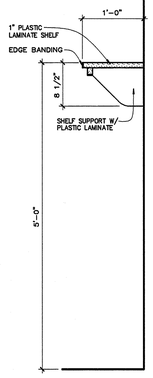

shelf section 14
SCALE: 1" = 1'-0"

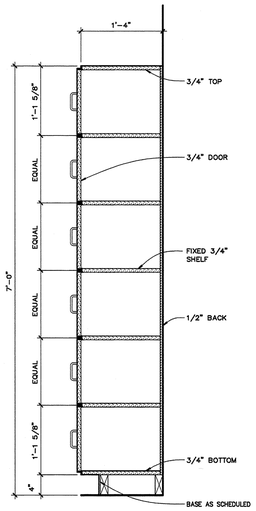

shelf section 13
SCALE: 1" = 1'-0"

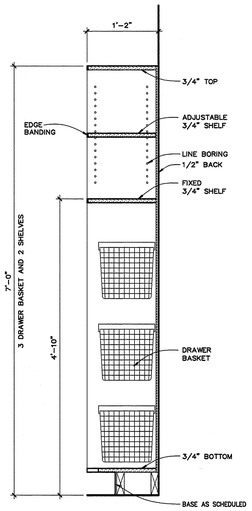

shelf section 12
SCALE: 1" = 1'-0"

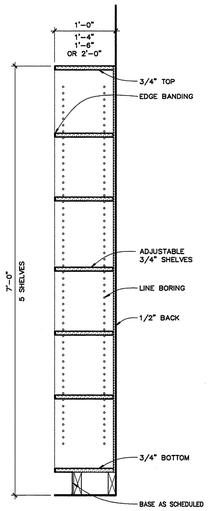

shelf section 11
SCALE: 1" = 1'-0"

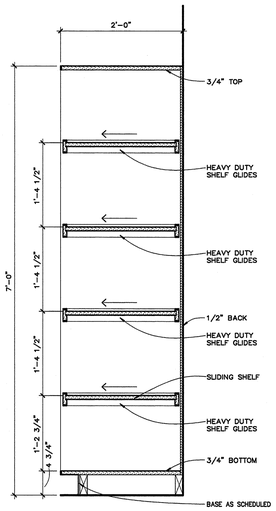

shelf section 10
SCALE: 1" = 1'-0"

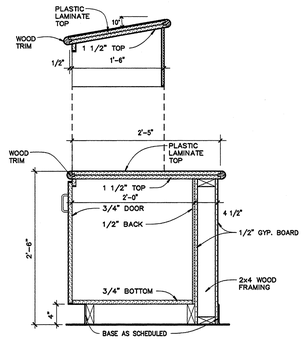

cabinet section 17
SCALE: 1" = 1'-0"

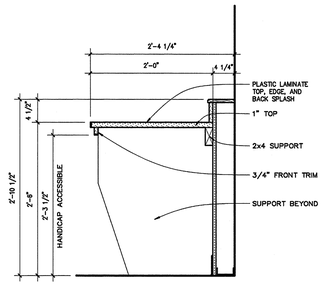

cabinet section 16
SCALE: 1" = 1'-0"

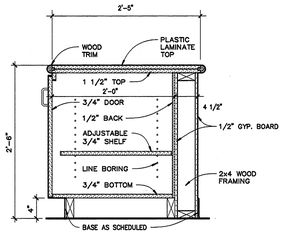

cabinet section 9
SCALE: 1" = 1'-0"

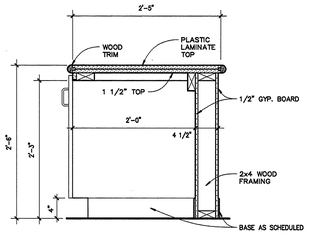

cabinet section 8
SCALE: 1" = 1'-0"

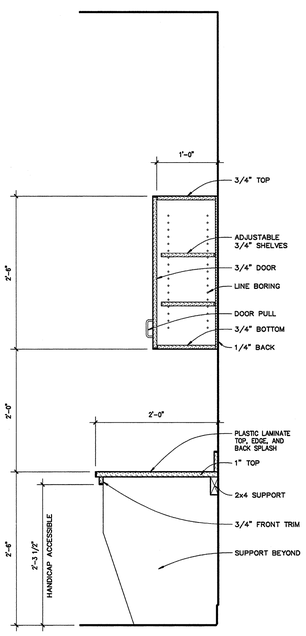

cabinet section 7
SCALE: 1" = 1'-0"

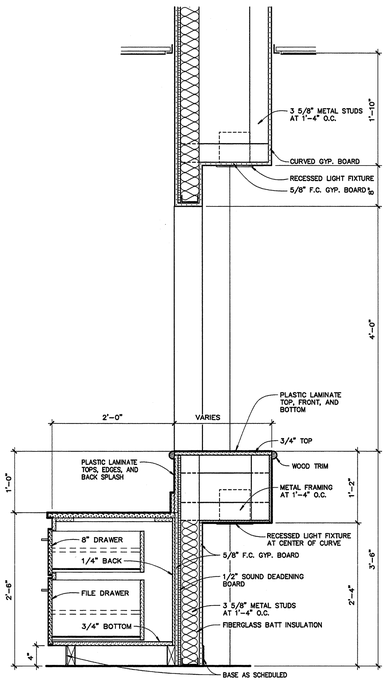

cabinet section 6
SCALE: 1" = 1'-0"

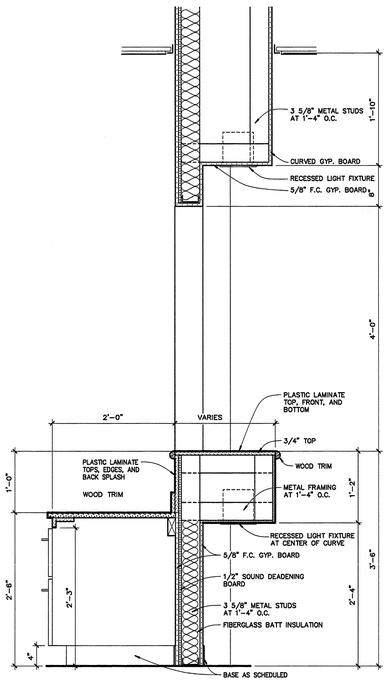

cabinet section 5
SCALE: 1" = 1'-0"

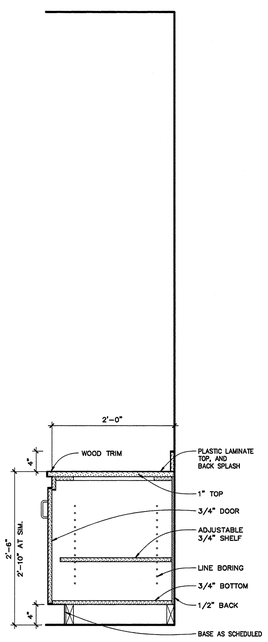

cabinet section 4
SCALE: 1" = 1'-0"

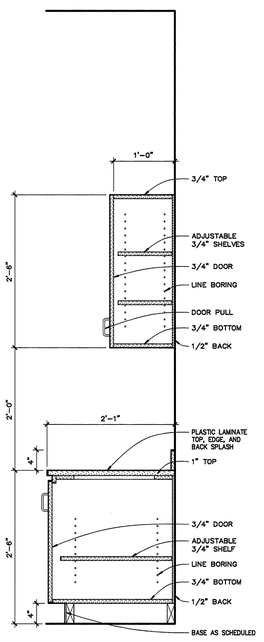

cabinet section 3
SCALE: 1" = 1'-0"

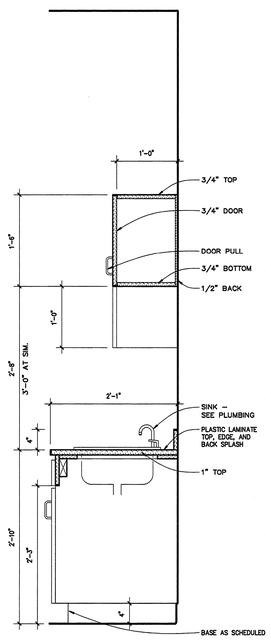

cabinet section 2
SCALE: 1" = 1'-0"

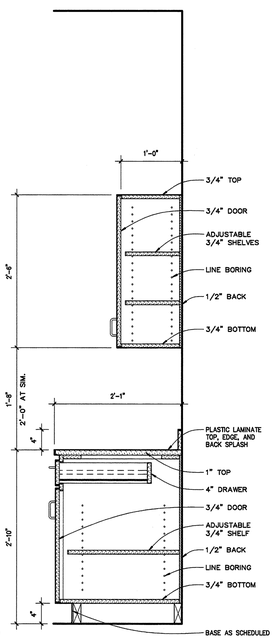

cabinet section 1
SCALE: 1" = 1'-0"

DONALD W. REYNOLDS CENTER FOR HEALTH SCIENCES
ARKANSAS STATE UNIVERSITY
JONESBORO, ARKANSAS

BRACKETT KRENNERICH architects
100 East Huntington, Suite D P.O. Box 1655 Jonesboro, Arkansas 72403-1655
870-932-0571 Fax 870-932-0975 www.bkarchs.com

Commission Number 12406
A604
Date: January 25, 2008

S:\Projects\Current\A50 Reynolds Center for Health Sciences\Working Drawings\A604.dwg Wednesday, January 23, 2008 Steve

ABBREVIATION LEGEND

AR	ANCHOR RODS
ADD'L	ADDITIONAL
AFF	ABOVE FINISHED FLOOR
ARCH	ARCHITECTURAL
B PL	BASE PLATE
BF	BOTTOM OF FOOTING
BFF	BELOW FINISHED FLOOR
BLDG	BUILDING
BOS	BOTTOM OF STEEL
BOT	BOTTOM
BP	BOTTOM OF PIER
BRG	BEARING
BTWN	BETWEEN
C	CHANNEL SHAPE (i.e. C8x11.5)
C	COLD FORMED C SHAPE
C.G.	CENTER OF GRAVITY
CJ	(KEYED) CONTROL JOINT
CL	CENTERLINE
CLG	CEILING
CLR	CLEAR
CMU	CONCRETE MASONRY UNIT
COL	COLUMN
CONC	CONCRETE
CONN	CONNECTION
CONST	CONSTRUCTION
CONT	CONTINUOUS
DBL	DOUBLE
DEG	DEGREES
DIA	DIAMETER
DIM	DIMENSION
DLH	DEEP LONGSPAN JOIST (i.e. 60DLH12)
DSE	COLD-FORMED DOUBLE SLOPED EAVE STRUT
DTL	DETAIL
DWLS	DOWELS
EA	EACH
EBC	EXTENDED BOTTOM CHORD
EJ	EXPANSION JOINT
EL.	ELEVATION
ELEV	ELEVATION
EMBED	EMBEDMENT LENGTH
EOS	EDGE OF SLAB
ERECT	ERECTION
EWEF	EACH WAY, EACH FACE
EXIST	EXISTING
EXP	EXPANSION
EXT	EXTERIOR
FD	FLOOR DRAIN
FF	FINISHED FLOOR
FV	FIELD VERIFY
FAS	FROM ADJACENT SPAN
FFE	FINISHED FLOOR ELEVATION
FIN FLR EL	FINISHED FLOOR ELEVATION
FS	FAR SIDE
FTG	FOOTING
Fy	STEEL YIELD STRENGTH
G	JOIST GIRDER (i.e. 24G8N7K)
GA	GAUGE
GB	GRADE BEAM
HORIZ	HORIZONTAL
HP	H-PILE SHAPE (i.e. HP8x36)
HS	HEADED STUD
HSS	HOLLOW STRUCTURAL SECTION (STEEL)
I/S	INSIDE
INFO	INFORMATION
INT	INTERIOR
JBE	JOIST BEARING ELEVATION
JT	JOINT
k	K-JOIST (i.e. 12k1 S.J.)
K	KIPS (KILO-POUNDS)
k/ft	KIPS PER FOOT
kcs	CONSTANT SHEAR JOIST (i.e. 12kcs2 S.J.)
KD	KILN-DRIED
KSF	KIPS PER SQUARE FOOT
KSI	KIPS PER SQUARE INCH
L	ANGLE (i.e. L3x3x1/4)
LH	LONGSPAN JOIST (i.e. 32LH05)
LLH	LONG LEG HORIZONTAL
LLV	LONG LEG VERTICAL
LW	LONG WAY
LWB	LAM. WOOD BEAM (i.e. LWB3x11)
M.B.	METAL BUILDING
MC	MOMENT CONNECTION
MAT'L	MATERIAL
MAX	MAXIMUM
MC	MISC. CHANNEL SHAPE (i.e. MC12x10.6)
MECH	MECHANICAL
MFR	MANUFACTURER
MIN	MINIMUM
MISC.	MISCELLANEOUS
MPH	MILES PER HOUR
MTL	METAL
N	JOIST SPACES ON GIRDER
NO.	NUMBER
N.S.	NON-SHRINK
NS	NEAR SIDE
NTS	NOT TO SCALE
o.c.	ON CENTER
O/S	OUTSIDE
OD	OUTSIDE DIAMETER
OPNG	OPENING
OPP.	OPPOSITE
OSB	ORIENTED STRAND BOARD
P##	DRILLED PIER (##-DIA IN INCHES)
PF###	PAD FOOTING (###-SIZE IN FEET)
P/T	POST-TENSIONED
PL	PLATE
PSF	POUNDS PER SQUARE FOOT
PSI	POUNDS PER SQUARE INCH
R	RADIUS
RE:	REFERENCE
REINF	REINFORCING
REQ'D	REQUIRED
RTU	ROOF TOP UNIT
S	STANDARD STEEL SHAPE (i.e. S10x35)
SCHED.	SCHEDULE
SECT	SECTION
SH	COLD-FORMED HAT SHAPE
SIM	SIMILAR
S.J.	STEEL JOIST (i.e. 12k1 S.J.)
SJ	(SAWN) CONTROL JOINT
SQ	SQUARE
SSE	COLD-FORMED SINGLE SLOPED EAVE STRUT
STIFF	STIFFENER
SW	SHORT WAY
T&B	TOP AND BOTTOM
T&G	TONGUE AND GROOVE
TEMP	TEMPERATURE
TF	TOP OF FOOTING
TOC	TOP OF COLUMN
TOC	TOP OF CONCRETE
TOM	TOP OF MASONRY
TOS	TOP OF STEEL
TP	TOP OF PIER
TS	TUBE STEEL SHAPE (i.e. TS4x4x1/4)
TYP	TYPICAL
UE	COLD-FORMED UNIVERSAL EAVE STRUT
UH	COLD-FORMED UNIVERSAL HAT SHAPE
UNO	UNLESS NOTED OTHERWISE
VER	VERIFY
VERT	VERTICAL
vs	VS JOIST (i.e. 2.5vs1)
W	WIDE FLANGE SHAPE (i.e. W8x10)
WP	WORK POINT
w/	WITH
w/o	WITHOUT
WT	T SHAPE (i.e. WT8x13)
WWF	WELDED WIRE FABRIC
Z	COLD FORMED Z SHAPE

STRUCTURAL NOTES

GENERAL NOTES

1. THE CONTRACTOR SHALL THOROUGHLY REVIEW ALL CONTRACT DOCUMENTS AND INFORM THE ARCHITECT OF CONFLICTS OR DISCREPANCIES PRIOR TO BIDDING, FABRICATION, AND CONSTRUCTION.
2. IN CASES OF DISCREPANCIES IN DIMENSIONS AND ELEVATIONS BETWEEN STRUCTURAL AND ARCHITECTURAL DRAWINGS, CONTRACTOR SHALL COORDINATE WITH THE ARCHITECT PRIOR TO FABRICATION AND CONSTRUCTION.
3. THE CONTRACTOR SHALL COORDINATE THE FIELD VERIFICATION OF ALL EXISTING SITE CONDITIONS SUCH AS EXISTING FLOOR ELEVATIONS, EXISTING FOOTING ELEVATIONS, EXISTING UTILITIES, ETC, WHETHER NOTED OR NOT IN THE CONTRACT DOCUMENTS AND SHALL NOTIFY THE ARCHITECT OF ANY CONFLICTS, DISCREPENCIES OR UNKNOWN CONDITIONS PRIOR TO FABRICATION AND CONSTRUCTION.
4. REPRODUCTION OF CONTRACT DRAWINGS, IN ANY FORM, WILL NOT BE ACCEPTED AS SHOP DRAWINGS.
5. REVIEW OF SUBMITTALS AND/OR SHOP DRAWINGS BY THE STRUCTURAL ENGINEER-OF-RECORD DOES NOT RELIEVE THE CONTRACTOR OF THE RESPONSIBILITY TO REVIEW AND CHECK SHOP DRAWINGS BEFORE SUBMITTAL FOR REVIEW. THE CONTRACTOR REMAINS SOLELY RESPONSIBLE FOR ERRORS AND OMISSIONS ASSOCIATED WITH THE PREPARATION OF SHOP DRAWINGS AS THEY PERTAIN TO MEMBER SIZES, DETAILS AND DIMENSIONS SPECIFIED IN THE CONTRACT DOCUMENTS. CONTRACTOR ALSO SHALL BE RESPONSIBLE FOR ALL MEANS, METHODS, TECHNIQUES, AND PROCEDURES OF CONSTRUCTION.
6. CONTRACTOR SHALL PROVIDE TEMPORARY GUYS AND BRACING AS REQUIRED DURING CONSTRUCTION. STRUCTURE IS NOT STABLE UNTIL ALL STRUCTURAL MEMBERS, CONNECTIONS, AND DECKING IS IN PLACE.
7. ACI, AISC, AITC AND AWS SPECIFICATIONS SHALL GOVERN ALL PHASES OF FABRICATION AND CONSTRUCTION.

RETAINING WALLS

1. ALL RETAINING WALLS SHALL HAVE A PROPERLY INSTALLED DRAINAGE SYSTEM TO RELIEVE HYDROSTATIC PRESSURE.
2. BACKFILL BOTH SIDES OF WALLS EQUALLY UNTIL LOW SIDE IS UP TO GRADE.
3. PROVIDE ADDITIONAL SHORING FOR ALL FOUNDATION WALLS AS REQUIRED DURING CONSTRUCTION BACKFILLING AND COMPACTION OPERATIONS.
4. ALL FOUNDATION WALLS WITH AN ELEVATED CONCRETE SLAB FRAMING INTO THE TOP OF THEM MAY BE BACKFILLED ONLY AFTER THE ELEVATED SLAB IS IN PLACE AND CURED.

CONCRETE NOTES (03 0000)

CONCRETE REINFORCEMENT (03 2000)

1. CONCRETE REINFORCEMENT SUPPLIER SHALL SUBMIT SHOP DRAWINGS TO THE ARCHITECT FOR REVIEW PRIOR TO CONSTRUCTION.
2. ALL REINFORCING STEEL SHALL BE ASTM A615, GRADE 60, UNLESS NOTED OTHERWISE.
3. PROVIDE THE FOLLOWING PROTECTIVE COVERING FOR ALL REINFORCING BARS UNLESS DETAILED OR NOTED OTHERWISE:

SLAB-ON-GRADE BARS (BOTTOM)	3" CLEAR
BELOW GRADE (CAST AGAINST EARTH)	3" CLEAR
BELOW GRADE (FORMED EDGE)	2" CLEAR
WALLS	2" CLEAR
COLUMNS	1.5" CLEAR TO TIES
ELEVATED BEAMS	1.5" CLEAR TO STIRRUPS
ELEVATED SLABS & JOISTS	0.75" CLEAR

4. DO NOT CUT TIES OR CONTINUOUS BARS TO PROVIDE CLEARANCE FOR EMBEDDED ITEMS OR OTHER OBSTRUCTIONS. INDIVIDUAL BARS AND TIES MAY BE MOVED VERTICALLY UP TO 1.5" AS REQUIRED TO PROVIDE CLEARANCE FOR EMBEDS, HOOKS, ETC. DO NOT HEAT REINFORCING TO BEND IT.
5. IF DOWELS OR VERTICAL REINFORCING ARE CUT OR SEVERELY BENT, CONTRACTOR MAY BE REQUIRED TO REMOVE THE CONCRETE BACK TO THE PREVIOUS POUR JOINT AND REPLACE THE DAMAGED BARS AND CONCRETE AT THE CONTRACTOR'S EXPENSE.
6. REINFORCEMENT SHALL BE SPLICED ONLY AS SHOWN OR NOTED IN THE STRUCTURAL CONTRACT DOCUMENTS. SPLICES AT OTHER LOCATIONS SHALL BE APPROVED IN WRITING BY THE STRUCTURAL ENGINEER-OF-RECORD PRIOR TO FABRICATION.
7. REINFORCING BARS MARKED AS CONTINUOUS SHALL BE SPLICED WITH CLASS "B" TENSION LAP SPLICES ONLY.
8. ALL TENSION LAP SPLICES SHALL BE CLASS "B" UNLESS NOTED OTHERWISE.
9. WELDED WIRE REINFORCEMENT SHALL CONFORM TO ASTM A185. LAP REINFORCEMENT 8 INCHES ON SIDES AND ENDS. MAINTAIN WIRE 1 TO 2 INCHES BELOW TOP SURFACE OF SLAB-ON-GRADE, UNLESS NOTED OTHERWISE. WELDED WIRE REINFORCEMENT MUST BE PLACED ON CHAIRS OR BOLSTERS AS REQUIRED TO MAINTAIN POSITION IN THE SLAB.
10. ONCE SHOP DRAWINGS HAVE BEEN REVIEWED, DO NOT ADD REINFORCING OR INFORMATION TO PREVIOUSLY SUBMITTED SHEETS FOR SUBSEQUENT SUBMITTALS UNLESS SHOP DRAWINGS ARE BEING RESUBMITTED AFTER BEING RETURNED "NOT REVIEWED".
11. WHERE ANCHOR RODS ARE CAST INTO CONCRETE, PROVIDE SUPPLEMENTAL REINFORCING EACH WAY, TIED NEAR THE TOP AND BOTTOM OF ALL ANCHOR RODS TO THE ADJACENT REBAR TO SECURE RODS DURING CONCRETE PLACEMENT. (MINIMUM SIZE #4)

CAST-IN-PLACE CONCRETE (03 3000)

1. CONCRETE SUPPLIER SHALL SUBMIT CONCRETE MIX DESIGN DATA TO THE ARCHITECT FOR REVIEW PRIOR TO CONSTRUCTION.
2. CONCRETE SHALL HAVE AT LEAST THE FOLLOWING MINIMUM COMPRESSIVE STRENGTHS AT 28 DAYS:
   A. FOOTINGS & GRADE BEAMS — 3000 PSI
   B. STAIR LANDINGS & STAIR TREADS — 3000 PSI
   C. REINFORCED CMU & BOND BEAM FILL — (SEE MASONRY NOTES)
   D. SLABS-ON-GRADE, WALLS, PILASTERS & PEDESTALS — 4000 PSI
   E. ELEVATED SLABS, BEAMS & JOISTS — 4000 PSI
3. MIX DESIGN SHALL INCLUDE AT LEAST THE FOLLOWING AMOUNTS OF PORTLAND CEMENT MEETING ASTM C150 OR D595 PER CUBIC YARD OF CONCRETE:

	NON-AIR ENTRAINED		AIR ENTRAINED		
28 DAY COMPRESSIVE STRENGTH	MIN. CEMENT CONTENT (LBS/YD^3)	MAXIMUM PERMISSIBLE W/C RATIO	MIN. CEMENT CONTENT (LBS/YD^3)	MAXIMUM PERMISSIBLE W/C RATIO	MAX. SLUMP w/ WRA
3000	470	0.53	517	0.46	6"
4000	564	0.44	611	0.40	6"

4. PROPORTIONS OF CONCRETE MIX DESIGNS SHALL BE DETERMINED BY THE PROCEDURES ESTABLISHED IN SECTION 5.3 OF ACI 318-99.
5. MIX DESIGN MAY INCLUDE (TYPE C) FLYASH AS A REPLACEMENT FOR PORTLAND CEMENT UP TO A MAXIMUM OF 20% OF THE TOTAL CEMENTIOUS MATERIAL. DO NOT USE A FLYASH CONTAINING CONCRETE MIX WHEN THE TEMPERATURE DURING PLACEMENT OR CURING IS PROJECTED TO FALL BELOW 60 DEGREES FAHRENHEIT.
6. MIX DESIGN MAY INCLUDE WATER REDUCING ADMIXTURES CONFORMING TO ASTM C494, TYPE A, TO PROVIDE WORKABILITY AND SPECIFIED SLUMP WITHOUT EXCEEDING SPECIFIED WATER/CEMENT RATIOS.
7. ALL CONCRETE EXPOSED TO WEATHER SHALL CONTAIN 5.5% AIR ENTRAINMENT (±1.5%). DO NOT EXCEED 3% AIR CONTENT IN CONCRETE RECEIVING A STEEL TROWEL FINISH.

MASONRY NOTES (04 0000)

1. ALL CONCRETE MASONRY UNITS (CMU) SHALL COMPLY WITH ASTM C90, GRADE N, TYPE I. SIZES SHALL BE AS INDICATED ON THE CONTRACT DRAWINGS.
2. TYPE M MORTAR SHALL BE USED BELOW GRADE AND TYPE S MORTAR SHALL BE USED ABOVE GRADE WITH AN ALLOWABLE COMPRESSIVE STRENGTH OF AT LEAST 2500 PSI FOR TYPE M AND 1800 PSI FOR TYPE S. MIX MORTAR WITH TYPE I PORTLAND CEMENT (TYPE III MAY BE USED FOR COLD WEATHER CONSTRUCTION), HYDRATED LIME MEETING ASTM C207 AND AGGREGATE MEETING ASTM C144.
3. FILL ALL BOND BEAMS, ALL CMU CELLS WITH VERTICAL REINFORCING OR EXPANSION BOLTS, AND ALL CELLS BELOW GRADE WITH 3000 PSI GROUT MEETING THE FOLLOWING REQUIREMENTS:
   A. USE A MINIMUM OF 5.5 BAGS OF PORTLAND CEMENT PER CUBIC YARD.
   B. MAXIMUM WATER/CEMENT RATIO BY WEIGHT SHALL BE 0.54.
   C. WATER-REDUCING ADMIXTURE MEETING ASTM C494 SHALL BE USED TO PROVIDE SUFFICIENT FLOWABILITY TO READILY FILL CELLS WITH A REASONABLE AMOUNT OF RODDING. ADDITIONAL WATER WILL NOT BE ALLOWED AFTER INITIAL MIXING.
   D. AGGREGATE SHALL BE WELL GRADED WITH A MAXIMUM SIZE OF 3/8".
   E. ALTERNATE MIX DESIGNS WILL BE CONSIDERED IF SUBMITTED TO THE ARCHITECT FOR APPROVAL AFTER CONTRACT IS AWARDED. ALTERNATE DESIGNS MUST SHOW SUFFICIENT FLOWABILITY CHARACTERISTICS AND A 28-DAY COMPRESSIVE STRENGTH OF AT LEAST 3000 PSI.
4. MAXIMUM HEIGHT OF ALL GROUT FILL SHALL NOT EXCEED 4'-0" UNLESS CLEANOUT AND INSPECTION HOLE IS PROVIDED AT THE BOTTOM OF THE POUR.
5. ALL CMU SHALL BE REINFORCED WITH #5 VERTICAL AND DOWELS AT 4'-0" ON CENTER UNLESS SPECIFICALLY NOTED OTHERWISE OR NOTED AS UNREINFORCED MASONRY ON THE PLANS. WHERE SPLICES ARE REQUIRED, USE A LAP LENGTH OF AT LEAST 28 INCHES.
6. ALL VERTICAL CORNERS, VERTICAL END CELLS AND ONE CELL EACH SIDE OF ALL OPENINGS SHALL BE GROUTED AND REINFORCED WITH (1) #5 UNLESS NOTED OTHERWISE.
7. HORIZONTAL BOND BEAMS WITH (2) #5 CONTINUOUS SHALL BE PROVIDED AT THE TOP AND BOTTOM OF ALL OPENINGS, AT STRUCTURALLY CONNECTED ROOF AND FLOOR LEVELS, AT THE TOP OF ALL PARAPETS OR WALLS AND AS SPECIFICALLY SHOWN ON THE CONTRACT DRAWINGS. BOND BEAMS ABOVE AND BELOW OPENINGS SHALL EXTEND AT LEAST 2'-0" BEYOND THE OPENING UNLESS NOTED OTHERWISE.
8. WHERE VERTICAL REINFORCING AND HORIZONTAL REINFORCING INTERSECT, ALL REINFORCING SHALL RUN CONTINUOUS.
9. HORIZONTAL REINFORCING SHALL BE CONTINUOUS AT CORNERS WITH 90-DEGREE BENDS OR CORNER BARS WITH EACH LEG EQUAL TO THE REQUIRED LAP LENGTH. (SEE TYPICAL CORNER BAR DETAIL)

METALS NOTES (05 0000)

STRUCTURAL STEEL (05 1200)

1. STRUCTURAL STEEL SUPPLIER SHALL SUBMIT SHOP DRAWINGS PREPARED UNDER THE DIRECT SUPERVISION OF A PROFESSIONAL ENGINEER REGISTERED IN THE STATE OF ARKANSAS TO THE ARCHITECT FOR REVIEW PRIOR TO FABRICATION.
2. ALL STRUCTURAL STEEL SHAPES SHALL BE AS FOLLOWS:
   A. ALL WIDE FLANGE STRUCTURAL STEEL SHAPES SHALL BE ASTM A992, Fy = 50 KSI.
   B. SQUARE OR RECTANGULAR HOLLOW STRUCTURAL SECTIONS SHALL BE ASTM A500, GRADE B, Fy = 46 KSI
   C. ROUND HOLLOW STRUCTURAL SECTIONS SHALL BE ASTM A500, GRADE B, Fy = 42 KSI
   D. ROUND STEEL PIPES SHALL BE ASTM A53, GRADE B, FY = 35 KSI.
   E. ALL OTHER STRUCTURAL STEEL (CHANNELS, ANGLES, PLATES, ETC.) SHALL BE ASTM A36.
4. ALL ANCHOR RODS SHALL BE ASTM F1554, GRADE 36 UNLESS NOTED OTHERWISE.
5. STRUCTURAL BOLTS SHALL BE ASTM A325-N, UNLESS OTHERWISE NOTED.
6. BOLTS THRU WOOD BLOCKING SHALL BE ASTM A307. ALL BOLTS IN CONTACT WITH TREATED WOOD SHALL BE STAINLESS STEEL (TYPE 316L), OR HOT DIPPED GALVANIZED WITH A MINIMUM COATING THICKNESS OF 0.2 OOUNCES PER SQUARE FOOT (ASTM A153). USE STAINLESS BOLTS WITH STAINLESS STEEL CONNECTORS AND GALVANIZED BOLTS WITH GALVANIZED CONNECTORS IF ONLY ONE IS SPECIFIED.
7. POST-INSTALLED EXPANSION ANCHORS SHALL BE HILTI KWIK BOLT II (OR APPROVED EQUAL) ASTM A510 CARBON STEEL ANCHORS WITH A MINIMUM STEEL YIELD STRENGTH OF fy=41 ksi, OR ASTM A276 (OR ASTM A493) STAINLESS STEEL ANCHORS WITH A MINIMUM YIELD STRENGTH fy=64 ksi. UNLESS SHOWN OTHERWISE ON THE DRAWINGS.
8. CONNECTIONS SHALL BE DESIGNED CONSIDERING BOLT THREADS INCLUDED IN THE SHEAR PLANE (A325-N). ALL BOLTING SHALL BE INSTALLED BY THE TURN-OF-THE-NUT METHOD, REMOVABLE LOAD INDICATOR BOLTS, OR CALIBRATED WRENCH. SNUG TIGHT BOLTING WILL NOT BE PERMITTED UNLESS SPECIFICALLY DETAILED ON CONTRACT DRAWINGS.
9. ALL BOLTED CONNECTIONS (EXCEPT COMPOSITE FLOOR BEAM CONNECTIONS) SHALL BE BEARING TYPE SELECTED TO SUPPORT ONE-HALF (1/2) OF THE TOTAL UNIFORM LOAD CAPACITY OF THE BEAMS AS SHOWN IN THE TABLES OF UNIFORM LOAD CONSTANTS, PART 2 OF THE AISC MANUAL, 8TH EDITION, FOR THE GIVEN BEAM SIZE, SPAN AND GRADE OF STEEL SPECIFIED. THE EFFECTS OF ANY CONCENTRATED LOADS MUST BE TAKEN INTO ACCOUNT. CONNECTIONS SHALL BE DESIGNED CONSIDERING THREADS INCLUDED IN THE SHEAR PLANE (A325-N).
10. ALL WELDS SHALL BE E70XX, MINIMUM AND SHALL BE PERFORMED BY AWS CERTIFIED WELDERS, CERTIFIED WITHIN THE PREVIOUS TWELVE (12) MONTHS.
11. DO NOT PRIME PAINT STEEL THAT RECEIVES SPRAYED FIREPROOFING.
12. ALL STEEL LINTELS AND SHELF ANGLES SHALL BE COATED WITH A ZINC RICH PRIMER.
13. ALL STRUCTURAL STEEL EXPOSED TO WEATHER (SUCH AS MECHANICAL FRAMES) SHALL BE HOT DIPPED GALVANIZED AFTER FABRICATION.
14. ALL FLOOR BEAMS ARE DESIGNED COMPOSITE WITH THE CONCRETE SLAB. <30> INDICATES THE TOTAL NUMBER OF ¾" DIAMETER HEADED STUDS ALONG THE BEAM. WHERE STUDS EXCEED ONE PER DECKING FLUTE, PLACE EXCESS FROM EACH END AT A UNIFORM SPACING WITH THE TWO STUDS PER FLUTE STAGGERED ACCORDING TO THE PLACEMENT DETAIL ON THE DRAWINGS. AT GIRDERS, 14 INDICATES THE NUMBER OF STUDS BETWEEN BEAM SPACINGS AS SHOWN. ALL STUD WELDING SHALL CONFORM TO AWS D1.1-79, PART F "STUD WELDING" AND SHALL BE PERFORMED BY A QUALIFIED WELDER. PROVIDE STUDS OF LENGTH TO ACHIEVE AT LEAST 1 INCH OF CLEARANCE AT THE FINISHED FLOOR ELEVATION. ALL STUDS WELDED IN THE FIELD SHALL BE INSTALLED USING AUTOMATICALLY TIMED STUD WELDING EQUIPMENT (STUD GUN) POWERED BY A PROPERLY SIZED GENERATOR. STICK WELDING OF STUDS WILL NOT BE PERMITTED. COMPLETELY REMOVE CERAMIC FERRULES PRIOR TO PLACING CONCRETE.
15. UNLESS OTHERWISE DETAILED, BOLTED CONNECTIONS FOR COMPOSITE BEAMS SHALL BE BEARING TYPE SELECTED TO SUPPORT THREE-QUARTERS (3/4) OF THE TOTAL UNIFORM LOAD CAPACITY OF THE BEAMS AS SHOWN IN THE TABLES OF UNIFORM LOAD CONSTANTS, PART 2 OF THE AISC MANUAL, 8TH EDITION, FOR THE GIVEN BEAM SIZE, SPAN AND GRADE OF STEEL SPECIFIED. THE EFFECTS OF ANY CONCENTRATED LOADS MUST BE TAKEN INTO ACCOUNT.
16. DO NOT PRIME PAINT THE TOP FLANGE OF BEAMS WHERE HEADED STUD WELDING WILL BE REQUIRED TO ACHIEVE COMPOSITE ACTION WITH THE SLAB.
17. WHERE STEEL BACKING IS USED IN CONNECTIONS WITH COMPLETE-JOINT-PENETRATION (CJP) FLANGE WELDS, STEEL BACKING AND TABS SHALL BE REMOVED EXCEPT THAT TOP FLANGE BACKING ATTACHED TO THE COLUMN BY A CONTINUOUS FILLET WELD ON THE EDGE BELOW THE CJP GROOVE WELD NEED NOT BE REMOVED. REMOVAL OF STEEL BACKING AND TABS SHALL BE AS FOLLOWS:
   A. FOLLOWING THE REMOVAL OF BACKING, THE ROOT PASS SHALL BE BACKGOUGED TO SOUND WELD METAL AND BACKWELDED WITH A REINFORCING FILLET. THE REINFORCING FILLET SHALL HAVE A MINIMUM LEG SIZE OF 3/16" (8 mm).
   B. WELD TAB REMOVAL SHALL EXTEND TO WITHIN 1/8" (3 mm) OF THE BASE METAL SURFACE EXCEPT AT CONTINUITY PLATES WHERE REMOVAL TO WITHIN ¼" (6 mm) OF THE PLATE EDGE IS ACCEPTABLE. EDGES OF THE WELD TAB SHALL BE FINISHED TO A SURFACE ROUGHNESS VALUE OF 500 MICRO-IN. (13 MICROMETERS) OR BETTER. GRINDING TO A FLUSH CONDITION IS NOT REQUIRED. GOUGES AND NOTCHES ARE NOT PERMITTED. THE TRANSITIONAL SLOPE OF ANY AREA WHERE GOUGES AND NOTCHES HAVE BEEN REMOVED SHALL NOT EXCEED 1:5. MATERIAL REMOVED BY GRINDING THAT EXTENDS MORE THAN 1/16" (2 mm) BELOW THE SURFACE OF THE BASE METAL SHALL BE FILLED WITH WELD METAL. THE CONTOUR OF THE WELD AT THE ENDS SHALL PROVIDE A SMOOTH TRANSITION, FREE OF NOTCHES AND SHARP CORNERS.
18. WHERE WELD ACCESS HOLES ARE PROVIDED, THEY SHALL BE AS SHOWN IN FIGURE 11-1 OF ANSI/AISC 341-02 (AISC SEISMIC PROVISIONS ,DATED MAY 21, 2002). THE WELD ACCESS HOLE SHALL BE GROUND SMOOTH TO A SURFACE ROUGHNESS VALUE NOT TO EXCEED 500 MICRO-IN. (13 MICROMETERS), AND SHALL BE FREE OF NOTCHES AND GOUGES.

METAL JOISTS (05 2000)

1. METAL JOIST SUPPLIER SHALL SUBMIT SHOP DRAWINGS PREPARED UNDER THE DIRECT SUPERVISION OF A PROFESSIONAL ENGINEER REGISTERED IN THE STATE OF ARKANSAS TO THE ARCHITECT FOR REVIEW PRIOR TO FABRICATION.
2. METAL JOISTS SHALL BE DESIGNED, MANUFACTURED, AND BRIDGED TO CONFORM WITH THE "STEEL JOIST INSTITUTE" STANDARD SPECIFICATION. PROVIDE RECOMMENDED CAMBER FOR THE JOIST SPAN. DO NOT WELD EXTENDED BOTTOM CHORDS OF JOISTS UNTIL ALL DEAD LOAD IS IN PLACE. PROVIDE SLOPED AND SKEWED SEATS ON ALL JOISTS AS REQUIRED. PROVIDE UPLIFT BRIDGING AND DESIGN JOISTS FOR A NET UPLIFT OF 10 PSF. ALL BRIDGING SHALL BE DESIGNED AND SUPPLIED BY THE JOIST MANUFACTURER.
3. DO NOT PRIME PAINT METAL JOISTS THAT WILL RECEIVE SPRAYED FIREPROOFING.

METAL DECKING (05 3100)

1. METAL DECKING SUPPLIER SHALL SUBMIT SHOP DRAWINGS PREPARED UNDER THE DIRECT SUPERVISION OF A PROFESSIONAL ENGINEER REGISTERED IN THE STATE OF ARKANSAS TO THE ARCHITECT FOR REVIEW PRIOR TO FABRICATION.
2. FLOOR DECKING SHALL BE 1.5VLI20 GALVANIZED COMPOSITE FLOOR DECK ATTACHED TO THE STRUCTURE WITH 5/8" DIAMETER PUDDLE WELDS AT 12" ON CENTER AT ALL SUPPORTS. SHEAR STUD WELDING ATTACHMENT MAY REPLACE PUDDLE WELDS WHERE STUD SPACING IS EQUAL TO OR LESS THAN 12" ON CENTER.
3. FLOOR DECKING AT STAIR LANDINGS WHERE NOTED SHALL BE 0.6C28 GALVANIZED CENTERING ATTACHED TO THE STRUCTURE WITH 5/8" DIAMETER PUDDLE WELDS IN A 30/4 PATTERN AT ALL SUPPORTS AND (2) #10 TEK SCREW SIDELAP FASTENERS BETWEEN SUPPORTS.
4. TYPICAL ROOF DECKING SHALL BE 1.5B20 PAINTED ROOF DECK ATTACHED TO THE STRUCTURE WITH 5/8" DIAMETER PUDDLE WELDS IN A 36/4 PATTERN AND (2) #10 TEK SCREW SIDELAP FASTENERS BETWEEN SUPPORTS.
5. LONG SPAN ROOF DECKING SHALL BE 3N20 PAINTED ROOF DECK ATTACHED TO THE STRUCTURE WITH 5/8" DIAMETER PUDDLE WELDS IN A 24/4 PATTERN AND (4) #10 TEK SCREW SIDELAP FASTENERS BETWEEN SUPPORTS.

COLD-FORMED STRUCTURAL STEEL FRAMING (05 4100)

1. COLD-FORMED METAL FRAMING SUPPLIER SHALL SUBMIT SHOP DRAWINGS TO THE ARCHITECT FOR REVIEW PRIOR TO FABRICATION.
2. SHOP DRAWINGS SHALL DETAIL A COMPLETE SYSTEM SHOWING MEMBER SIZES, SPACING AND CONNECTIONS TO THE STRUCTURE.
3. ALL STRUCTURAL STUDS, TRACK, BRIDGING, END CLOSURES AND ACCESSORIES SHALL BE FORMED FROM STEEL CONFORMING TO THE REQUIREMENTS OF ASTM A653/A653M.
4. ALL COLD-FORMED STEEL STUD SECTIONS ARE IDENTIFIED ACCORDING TO THE DESIGNATIONS GIVEN IN THE "STEEL STUD MANUFACTURERS ASSOCIATION" (SSMA) PRODUCT TECHNICAL INFORMATION MANUAL. SEE SSMA FOR MINIMUM SECTION PROPERTIES.

   EXAMPLE: 600S162-43

600	=	MEMBER DEPTH (600 x 1/100 INCHES = 6")
S	=	STYLE (S = STUD, T = TRACK, U = CHANNEL)
162	=	FLANGE WIDTH (162 x 1/100 INCHES = 1.625" = 1-5/8")
43	=	MATERIAL THICKNESS (43 = 43 MILS x1/1000 INCHES = 0.043")

   YIELD STRENGTH SHALL BE 33 KSI UNLESS NOTED ON PLANS AS FOLLOWS:

   600S162-43 (50 KSI) - FOR 50 KSI YIELD STRENGTH
5. SEE SPECIFICATIONS FOR ADDITIONAL INFORMATION.
6. PROVIDE COLUMNS BUILT-UP OF MULTIPLE STUDS (2 STUDS MIN.) FOR HEADERS AND JAMBS.
7. ALL EXTERIOR WALLS SHALL BE FRAMED WITH MINIMUM 600S200-43 STUDS AT 16" o.c. AND WITH STUDS SPACED AT 12" o.c. WHEN PLACED WITHIN 6'-0" OF ALL BUILDING CORNERS.
8. ALTERNATE GAGES AND SPACING MAY BE PROPOSED, BUT MUST BE OF EQUAL OR GREATER STRENGTH AND STIFFNESS THAN WHAT IS SPECIFIED HERE OR THE SYSTEM MAY BE RE-DESIGNED TO HAVE ADEQUATE BRACING COMPLETELY PROVIDED BY THE STEEL STUD SUPPLIER, THAT IS COORDINATED TO NOT CAUSE INTERFERENCE WITH ANY OTHER TRADES. ALL PROPOSALS SHOULD BE SUBMITTED IN WRITING FOR APPROVAL, WITH CALCULATIONS, PRIOR TO FABRICATION AND CONSTRUCTION.

EARTHWORK & FOUNDATION NOTES (31 0000)

EXCAVATION & FILL (31 2200 & 31 2323)

1. ALL UNDERCUTTING, SITE PREPARATION, FILL SELECTION, BACKFILLING AND COMPACTION SHALL BE PERFORMED IN STRICT ACCORDANCE WITH THE SPECIFICATIONS AND SOILS ENGINEER'S RECOMMENDATIONS.
2. SELECT FILL BENEATH THE BUILDING SHALL BE PLACED IN LIFTS NOT EXCEEDING 8" LOOSE THICKNESS AND COMPACTED TO AT LEAST 95% OF STANDARD PROCTOR DRY DENSITY (ASTM D698). THE IN-PLACE DENSITY AND MOISTURE CONTENT SHALL BE ESTABLISHED AND APPROVED FOR EACH LIFT PRIOR TO PLACEMENT OF SUBSEQUENT LIFTS.

SPREAD FOOTINGS (31 2450)

1. BOTTOM OF FOOTING ELEVATIONS (BF) SHOWN ON THE PLANS ARE FOR ESTIMATING PURPOSES ONLY AND ARE NOT NECESSARILY TO BE USED FOR CONSTRUCTION. THE SOILS ENGINEER OR HIS REPRESENTATIVE SHALL BE ENGAGED TO INSPECT ALL FOOTING EXCAVATIONS TO VERIFY THAT THE REQUIRED ALLOWABLE BEARING CAPACITY IS ATTAINABLE. BOTTOM OF FOOTING ELEVATIONS SHALL BE ADJUSTED PER THE ON-SITE RECOMMENDATIONS OF THE SOILS ENGINEER OR HIS REPRESENTATIVE.
2. ALL SPREAD FOOTINGS SHALL BE FOUNDED IN ABOVE MECHANICALLY IMPROVED SOILS PER THE RECOMMENDATIONS OF THE GEOTECHNICAL ENGINEER AND GEOPIER FOUNDATION COMPANY WITH AN ALLOWABLE NET BEARING CAPACITY OF AT LEAST 6500 PSF. (REF: GEOTECHNICAL INVESTIGATION, JOB NO. 06-323 DATED AUGUST 30, 2007 BY GRUBBS, HOSKYN, BARTON & WYATT.)
3. CONTRACTOR SHALL RETAIN THE SERVICES OF A GEOTECHNICAL ENGINEER REGISTERED IN THE STATE OF ARKANSAS TO PROVIDE GEOTECHNICAL ENGINEERING SERVICES AS REQUIRED.
4. MAINTAIN FINISHED GRADE (AND/OR BOTTOM OF FOOTING ELEVATIONS) TO PROVIDE AT LEAST 1'-6" COVER ABOVE THE BOTTOM OF ALL EXTERIOR FOOTINGS FOR FROST PROTECTION.

SHORT AGGREGATE PIER FOUNDATION NOTES (31 2500)

1. THE AGGREGATE PIER INSTALLER SHALL SUBMIT DETAILED DESIGN CALCULATIONS AND CONSTRUCTION DRAWINGS SEALED AND SIGNED BY A PROFESSIONAL ENGINEER REGISTERED IN THE STATE OF ARKANSAS TO THE ARCHITECT FOR APPROVAL PRIOR TO THE START OF CONSTRUCTION.
2. QUANTITIES AND LAYOUT OF PIERS SHOWN ON THE CONTRACT DRAWINGS ARE FOR ESTIMATING PURPOSES ONLY AND ARE NOT NECESSARILY TO BE USED FOR CONSTRUCTION. THE PIER DESIGN ENGINEER MAY INCREASE OR DECREASE THE NUMBER AND MODIFY THE LAYOUT OF THE PIERS AS REQUIRED TO BEST MEET THE DESIGN REQUIREMENTS AND AS REQUIRED BY ACTUAL SITE CONDITIONS.
3. ALL SPREAD FOOTINGS SHALL BEAR ON THE SHORT AGGREGATE PIER IMPROVED SOIL WITH AN ALLOWABLE NET BEARING PRESSURE OF AT LEAST 6500 PSF. (REF: GEOTECHNICAL INVESTIGATION, JOB NO. 06-323 DATED AUGUST 30, 2007 BY GRUBBS, HOSKYN, BARTON & WYATT.)
4. A SHORT AGGREGATE PIER LOAD TEST SHALL BE PERFORMED TO VERIFY THE DESIGN OF A COMPRESSION AND UPLIFT PIER AND SHALL BE MONITORED BY AN INDEPENDENT TESING AGENCY.
5. ALL UPLIFT SHORT AGGREGATE PIERS SHALL BE DESIGNED AND CONFIGURED TO RESIST ALL BUILDING CODE REQUIRED LOAD COMBINATIONS USING THE LOADS SHOWN ON THE PLANS.

DESIGN LOADS:

DEAD LOADS:		WEIGHT OF THE STRUCTURE
ROOF LIVE LOAD:		20 PSF
FLOOR LIVE LOADS:		
CLASSROOMS		40 PSF
OFFICES		50 PSF
CORRIDORS		80 PSF
LOBBIES		100 PSF
ASSEMBLY AREAS		100 PSF
STAIRS AND EXITS		100 PSF
COMPUTER ROOMS		100 PSF
MECHANICAL ROOMS		125 PSF
GROUND SNOW LOAD:		10 PSF
BASIC WIND SPEED:		90 MPH
WIND IMPORTANCE FACTOR:		1.15
WIND EXPOSURE		B
INTERNAL PRESSURE COEFFICIENT:		0.18
COMP. & CLADDING WIND PRESSURE:		SEE TABLE 1609.6.2.1 (2)
SEISMIC USE GROUP:		II
SPECTRAL RESPONSE COEFFICIENTS	Sds:	1.02
	Sd1:	0.60
SITE CLASS:		D
SEISMIC DESIGN CATEGORY		D
BASIC SEISMIC-FORCE-RESISTING SYSTEM:		BUILDING FRAME SYSTEM SPECIAL STEEL CONCENTRICALLY BRACED FRAMES
DESIGN BASE SHEAR:		0.21
ANALYSIS PROCEDURE:		EQUIV. LATERAL FORCE (1617.4)
SEISMIC ZONE PER A.C.A. 12-80-101 ET. SEQ.		3
CODES:		2002 ARKANSAS FIRE PREVENTION CODE A.C.A. 12-80-101 ET. SEQ. (ARKANSAS STATE LAW)

THE FOUNDATIONS AND STRUCTURAL FRAMING HAVE BEEN DESIGNED TO RESIST THE LOADS AND FORCES STATED ABOVE IN ACCORDANCE WITH THE REQUIREMENTS OF THE 2002 ARKANSAS FIRE PREVENTION CODE AND A.C.A. 12-80-101 ET. SEQ.

UNFACTORED LOADS IN KIPS*					FOOTING SCHEDULE				
FOOTING	DEAD LOAD	LIVE LOAD	EQ. VERTICAL	EQ. HORIZONTAL	MARK	"W"	"L"	"t"	REINFORCING
H/5	108	51	±285	±138	PF-BGP(1)	8'-6"	8'-6"	2'-6"	(12) #8 EA. WAY (T & B)
J/5	63	32	±320	±138	PF-BGP(1)	8'-6"	8'-6"	2'-6"	(12) #8 EA. WAY (T & B)
H/12 J/12	49	30	±285	±138	PF-BGP(1)	8'-6"	8'-6"	2'-6"	(12) #8 EA. WAY (T & B)
E/7	15	21	±292	0	PF-BGP(1)	8'-6"	8'-6"	2'-6"	(12) #8 EA. WAY (T & B)
A/3	100	40	±85	±102	PF-BGP(1)	8'-6"	8'-6"	2'-6"	(12) #8 EA. WAY (T & B)
C/3	116	124	±224	±102	PF-BGP(1)	8'-6"	8'-6'	2'-6"	(12) #8 EA. WAY (T & B)
E/3	82	54	±195	0	PF-BGP(1)	8'-6"	8'-6"	2'-6"	(12) #8 EA. WAY (T & B)
F/3	92	82	±268	±102	PF-BGP(1)	8'-6"	8'-6"	2'-6"	#9 EA. WAY (T & B)
F/4	100	96	±268	±102	PF-BGP(1)	8'-6"	8'-6"	2'-6"	(12) #8 EA. WAY (T & B)
E/7.5 3/B.1 3/E.5	0	0	±108	±142	PF-BGP(2)	6'-0"	6'-0"	2'-6"	(9) #7 EA. WAY (T & B)

* LOADS GIVEN ARE FOR THE DESIGN OF THE FOOTINGS BY GEOPIER(TM). THE LOADS ARE UNFACTORED LOADS AND SHALL BE USED IN COMBINATION PER APPLICABLE CODES. ALL APPLICABLE CODE SAFETY FACTORS SHALL BE USED. "DL" DESIGNATES DEAD LOADS, "LL" DESIGNATES LIVE LOADS, "EQ(V)" DESIGNATES VERTICAL SEISMIC LOADS (COLUMN AXIAL), AND "EQ(H)" DESIGNATES SEISMIC LATERAL LOADS (COLUMN SHEAR) "+" AND "-" DESIGNATE UP AND DOWN OR RIGHT AND LEFT RESPECTIVELY. (IN THE PLANE OF THE SHEAR WALL) THE FOOTINGS TO BE DESIGNED ARE DESIGNATED AS "PF-BPG" ON THE PLANS. THE TOP OF THE FOOTINGS SHALL MATCH THE SURROUNDING FOOTINGS AND THE BOTTOM OF THE FOOTING SHALL BE DESIGNATED BY GEOPIER(TM) BASED ON THE REQUIRED FOOTING THICKNESS. THE REQUIRED THICKNESS SHALL ALSO BE COORDINATED WITH THE COLUMN ANCHOR BOLT REQUIREMENTS. (THE DEAD LOADS GIVEN INCLUDE THE WEIGHT OF THE CONCRETE WALLS BUT NOT THE WEIGHT OF THE REQUIRED FOOTINGS.)

PAD FOOTING SCHEDULE

MARK	PAD SIZE "W"	PAD SIZE "L"	PAD SIZE "t"	REINFORCING
PF400	4'-0"	4'-0"	1'-6"	(5) #5 EACH WAY BOTTOM
PF600	6'-0"	6'-0"	1'-6"	(7) #6 EACH WAY TOP (9) #7 EACH WAY BOTTOM
PF700	7'-0"	7'-0"	2'-0"	(8) #6 EACH WAY TOP (10) #8 EACH WAY BOTTOM
PF800	8'-0"	8'-0"	2'-0"	(9) #6 EACH WAY TOP (11) #8 EACH WAY BOTTOM

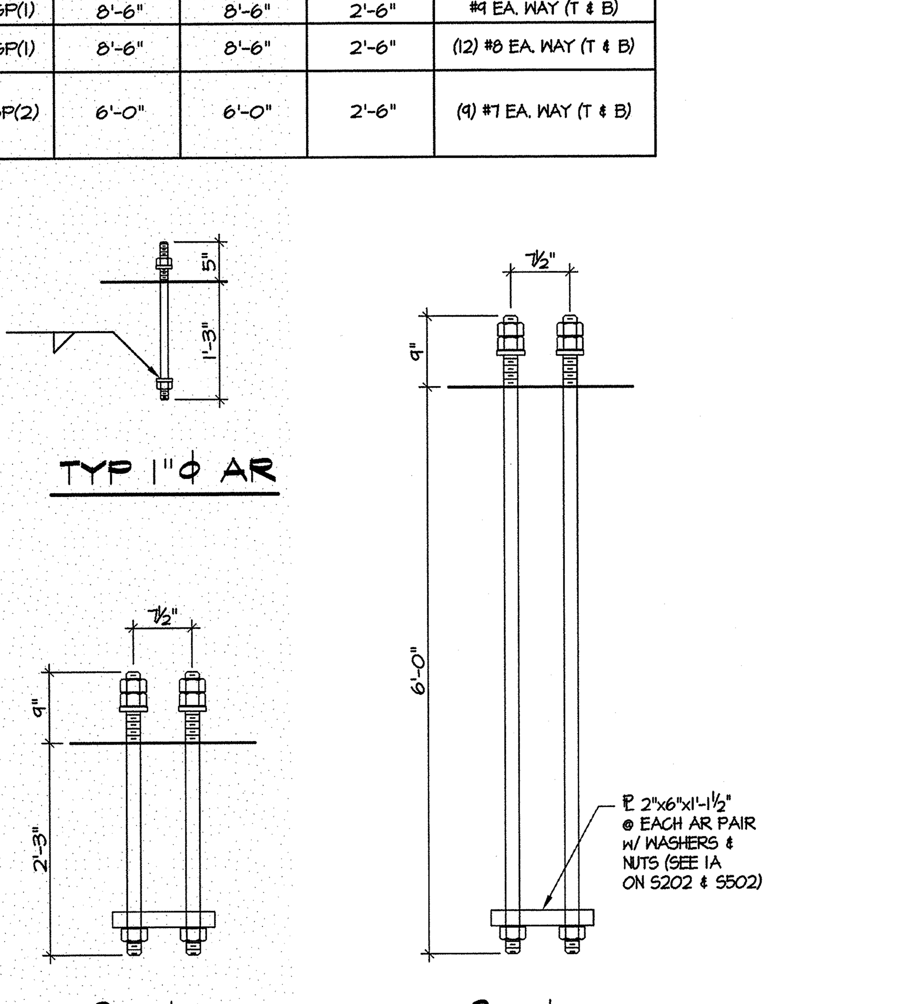

TYP 1"φ AR

1¾"φ AR
@ FOOTINGS

1¾"φ AR
@ WALLS

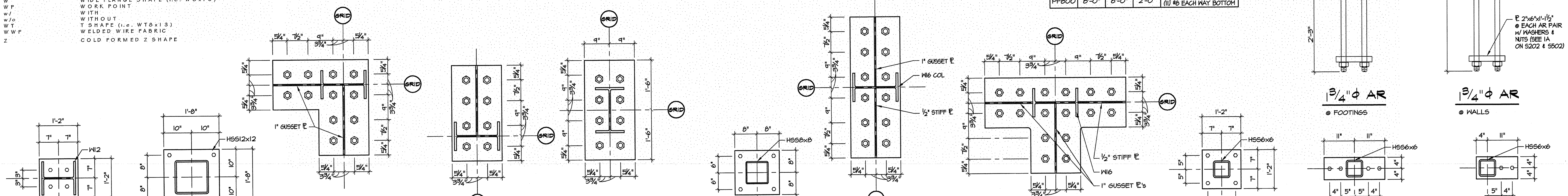

BASE PL-1
1" BASE PL w/ (4) 1"φ AR

BASE PL-2
1" BASE PL w/ (4) 1"φ AR

BASE PL-3
2" BASE PL w/ (12) 1¾"φ AR

BASE PL-4
2" BASE PL w/ (8) 1¾"φ AR

BASE PL-5
2" BASE PL w/ (8) 1¾"φ AR

BASE PL-6
1" BASE PL w/ (4) 1"φ AR

BASE PL-7
1" BASE PL w/ (4) 1"φ AR

BASE PL-8
2" BASE PL w/ (16) 1¾"φ AR

BASE PL-9
1" BASE PL w/ (4) 1"φ AR

BASE PL-10
1" BASE PL w/ (2) 1"φ AR

BASE PL-11
1" BASE PL w/ (2) 1"φ AR

ASU ARKANSAS STATE UNIVERSITY

DONALD W. REYNOLDS
CENTER FOR HEALTH SCIENCES
ARKANSAS STATE UNIVERSITY
JONESBORO, ARKANSAS

BRACKETT KRENNERICH architects
100 East Huntington, Suite D P.O. Box 1655 Jonesboro, Arkansas 72403-1655 870-932-0571 Fax 870-932-0975 www.bkarchts.com

Commission Number
12406

S100

Date: January 25, 2008

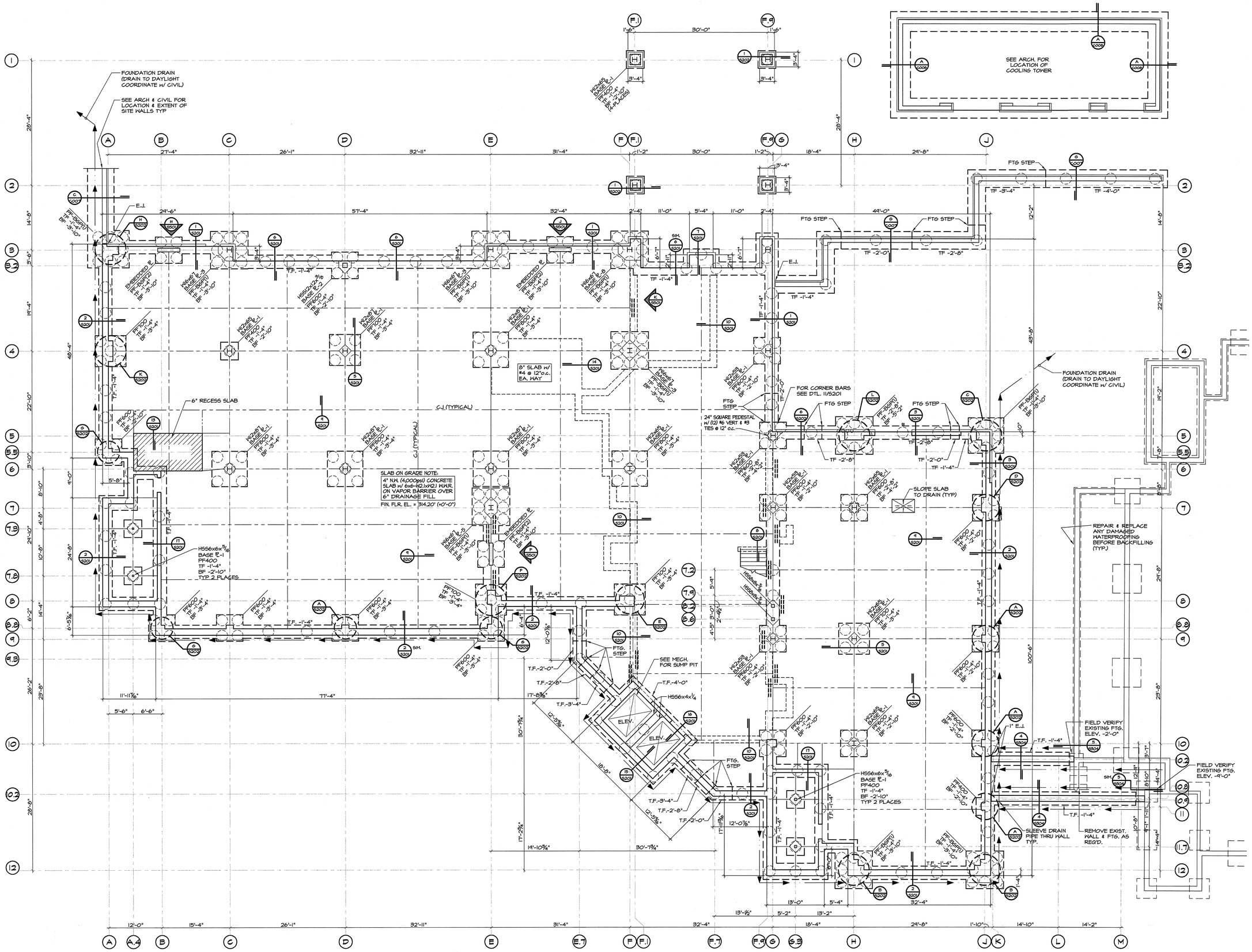

FOUNDATION PLAN
1/8"=1'-0"

ARKANSAS STATE UNIVERSITY

DONALD W. REYNOLDS CENTER FOR HEALTH SCIENCES

ARKANSAS STATE UNIVERSITY
JONESBORO, ARKANSAS

BRACKETT KRENNERICH architects

1001 East Huntington, Suite D · P.O. Box 1655 · Jonesboro, Arkansas 72403-1655
870-932-1971 Fax 870-932-1976 www.bkarchs.com

Commission Number 12406

S101

Date: January 25, 2008

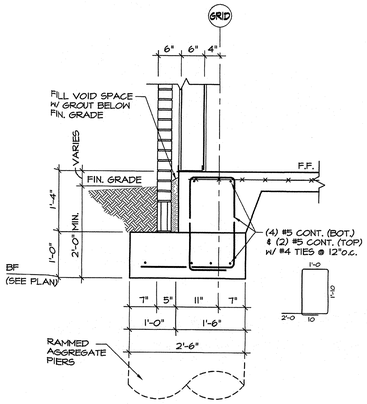

1 SECTION
3/4"=1'-0"

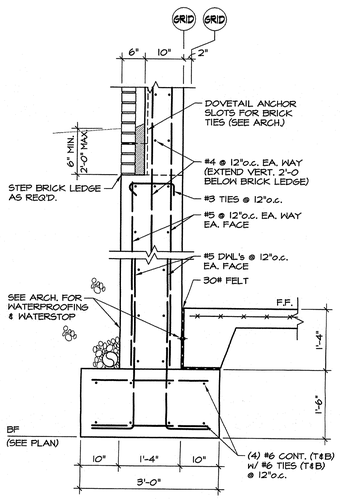

2 SECTION
3/4"=1'-0"

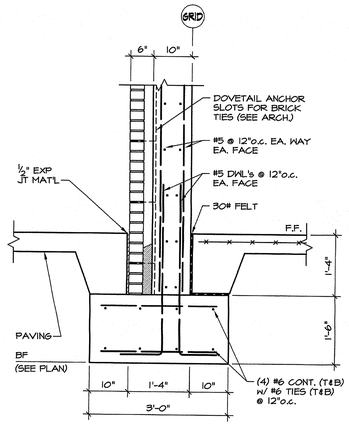

3 SECTION
3/4"=1'-0"

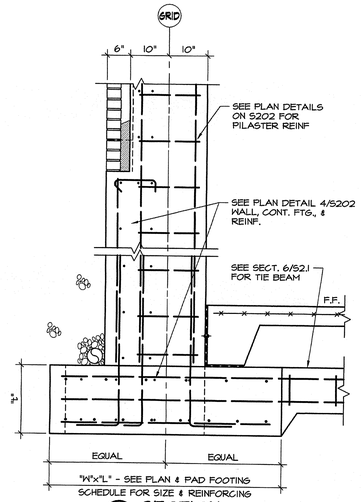

4 SECTION
3/4"=1'-0"

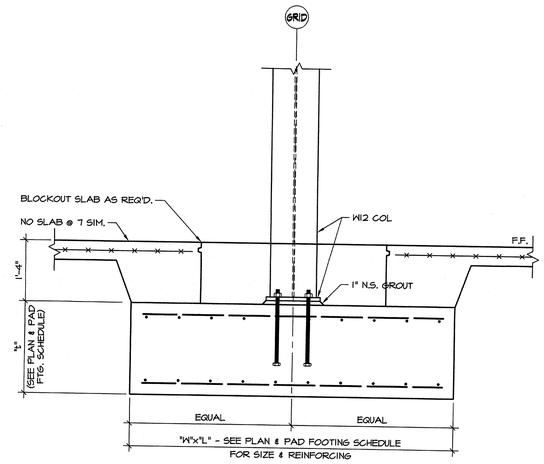

5 SECTION
3/4"=1'-0"

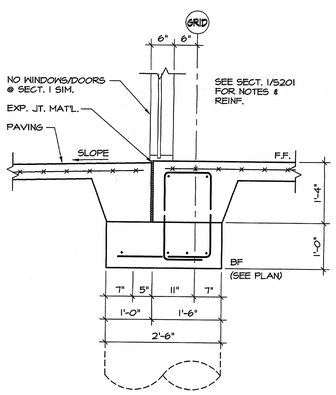

6 SECTION
3/4"=1'-0"

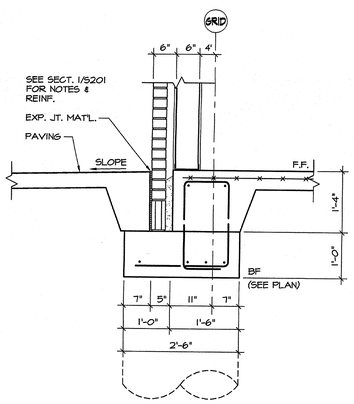

7 SECTION
3/4"=1'-0"

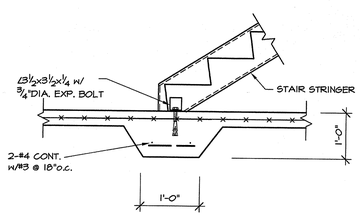

8 SECTION
3/4"= 1'-0"

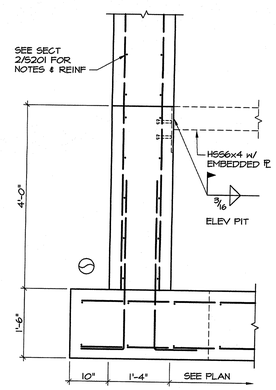

15 SECTION
3/4"=1'-0"

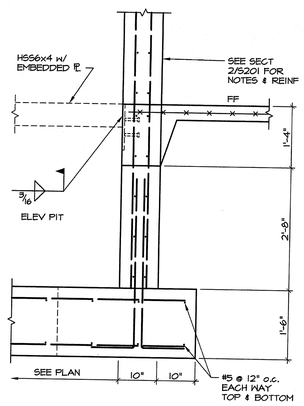

16 SECTION
3/4"=1'-0"

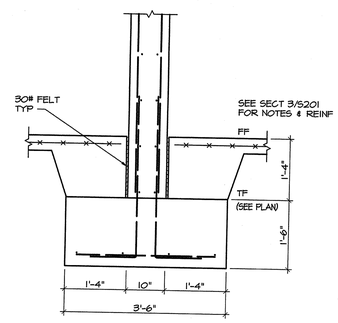

17 SECTION
3/4"=1'-0"

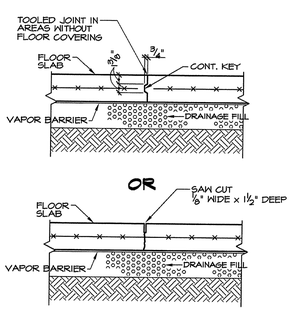

IF SAW JOINTS ARE USED, CONTRACTOR IS RESPONSIBLE FOR JOINTS CRACKING AS SHOWN ON PLAN AND DETAIL. SAWING JOINTS SHALL BEGIN AS SOON AS THE SURFACE IS FIRM ENOUGH SO THAT IT WILL NOT BE TORN OR DAMAGED BY THE BLADE. SLABS MUST BE SAWN ON SAME DAY SLAB IS POURED. DO NOT ALLOW SLAB TO CURE OVERNIGHT BEFORE SAWING.

9 CONTROL JOINT DETAIL
N. T. S.

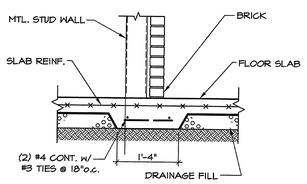

NOTE:
TYPICAL @ ALL BRICK OR CMU WALLS. SEE ARCH. FOR EXACT LOCATION.

10 THICKENED SLAB DETAIL
3/4"= 1'-0"

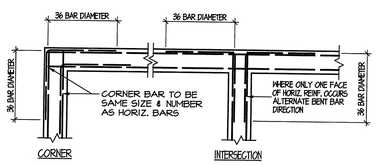

TYPICAL FOR: CONC. WALLS
CONC. BEAMS
CONC. FOOTINGS
CONC. FILLED BONDBEAMS
THICKENED SLABS

11 TYPICAL CORNER BAR DETAIL
N. T. S.

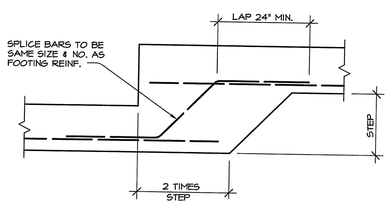

12 CONT. FOOTING STEP DETAIL
N. T. S.

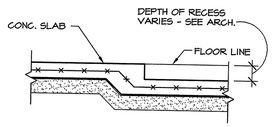

NOTE:
SEE ARCH. FOR EXACT NUMBER, SIZE & LOCATION OF RECESS.

13 RECESS SLAB DETAIL
N. T. S.

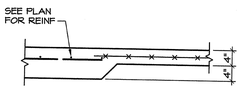

14 SECTION
3/4"=1'-0"

ARKANSAS STATE UNIVERSITY

DONALD W. REYNOLDS CENTER FOR HEALTH SCIENCES

ARKANSAS STATE UNIVERSITY
JONESBORO, ARKANSAS

BRACKETT KRENNERICH architects
1103 East Huntington, Suite 13 P.O. Box 1605 Jonesboro, Arkansas 72401-1605
(870) 932-0573 Fax (870) 932-0975 www.bkarchs.com

Commission Number 12406

S201

Date: January 25, 2008

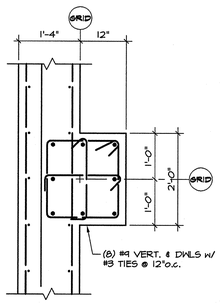

A PLAN DETAIL
3/4"=1'-0"

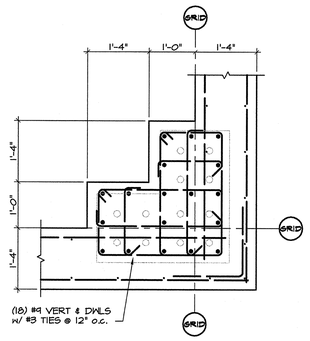

B PLAN DETAIL
3/4"=1'-0"

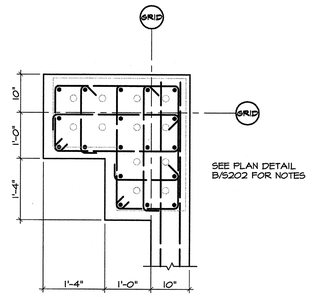

C PLAN DETAIL
3/4"=1'-0"

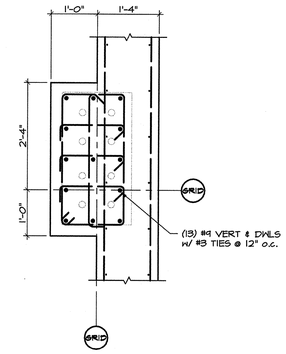

D PLAN DETAIL
3/4"=1'-0"

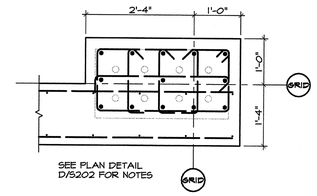

E PLAN DETAIL
3/4"=1'-0"

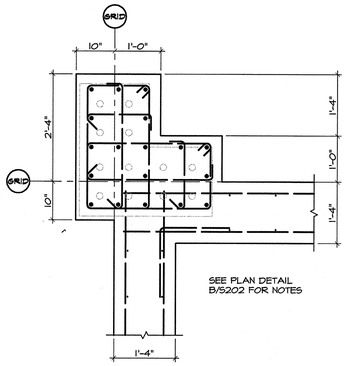

F PLAN DETAIL
3/4"=1'-0"

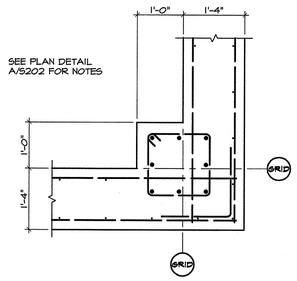

G PLAN DETAIL
3/4"=1'-0"

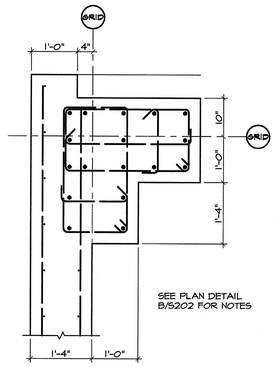

H PLAN DETAIL
3/4"=1'-0"

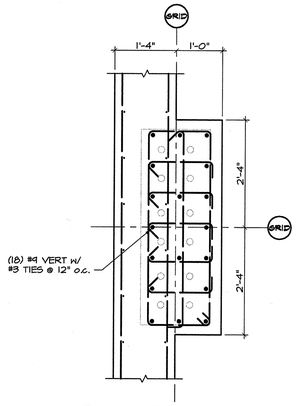

K PLAN DETAIL
3/4"=1'-0"

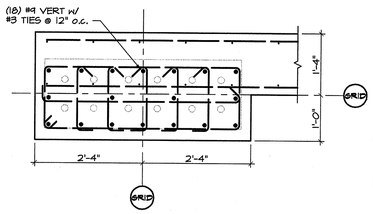

L PLAN DETAIL
3/4"=1'-0"

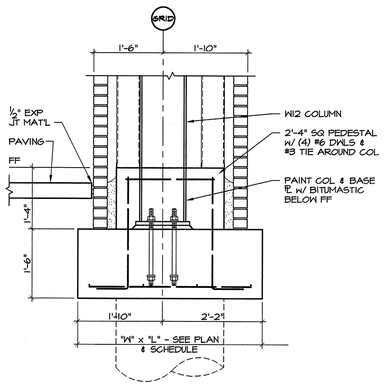

1 SECTION
3/4"=1'-0"

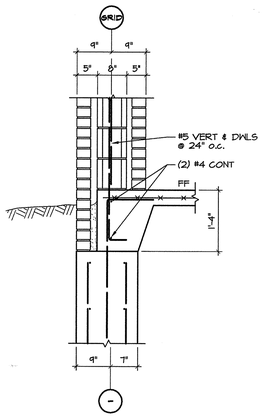

2 SECTION
3/4"=1'-0"

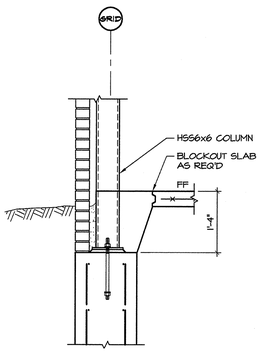

3 SECTION
3/4"=1'-0"

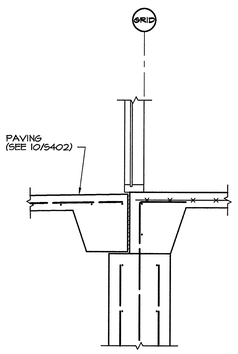

4 SECTION
3/4"=1'-0"

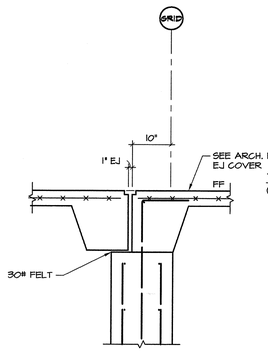

5 SECTION
3/4"=1'-0"

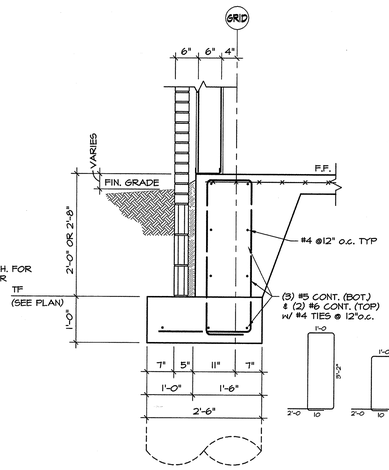

6 SECTION
3/4"=1'-0"

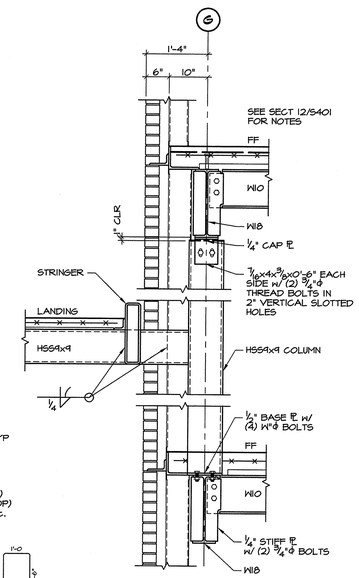

7 SECTION
3/4"=1'-0"

ARKANSAS STATE UNIVERSITY

DONALD W. REYNOLDS CENTER FOR HEALTH SCIENCES

ARKANSAS STATE UNIVERSITY
JONESBORO, ARKANSAS

BRACKETT KRENNERICH architects

1001 East Huntington, Suite 17 P.O. Box 1605 Jonesboro, Arkansas 72403-1605
870.932.0571 Fax 870.932.0976 www.bkarchs.com

Commission Number
12406

S202

Date: January 25, 2008

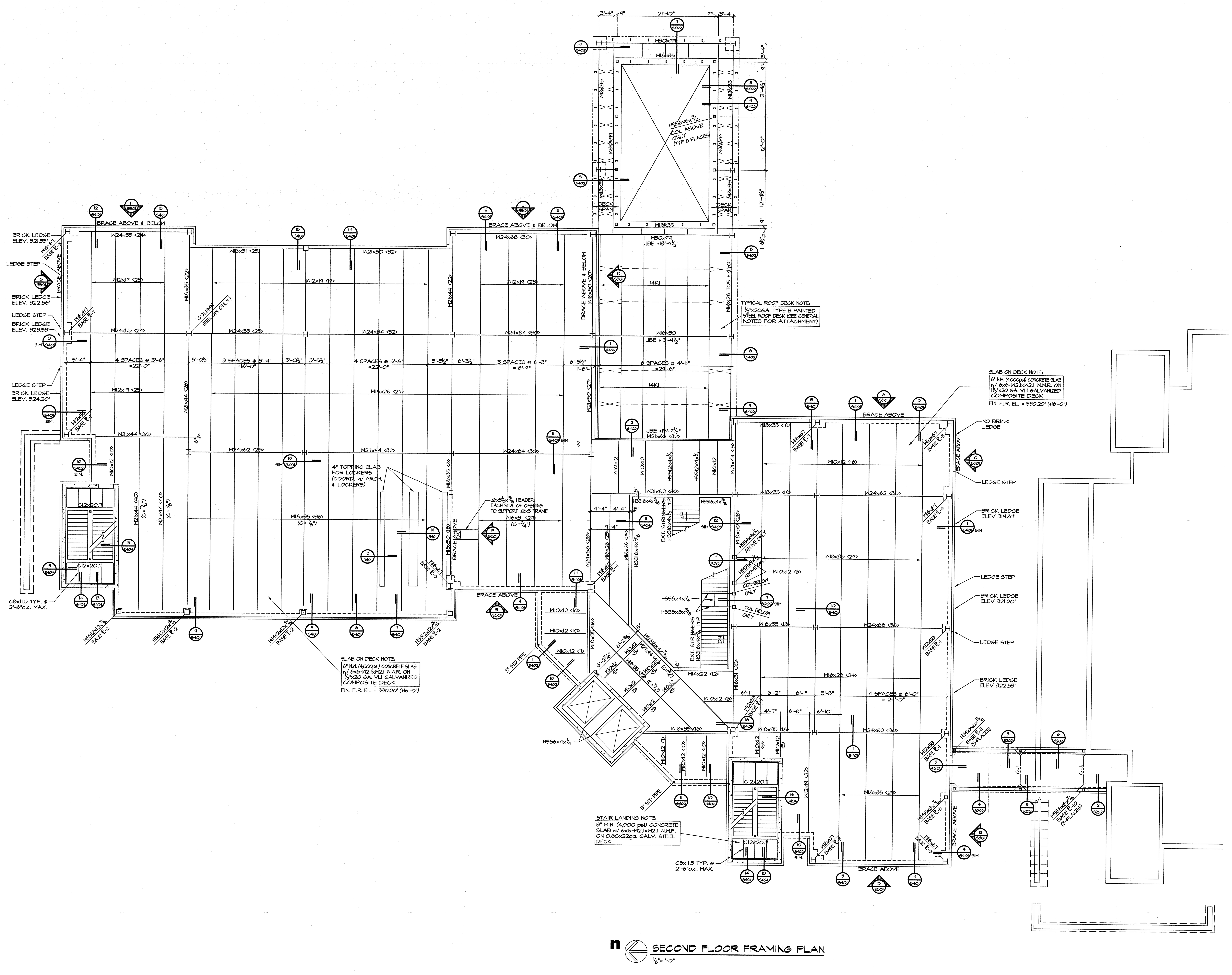

SECOND FLOOR FRAMING PLAN
1/8"=1'-0"

ARKANSAS STATE UNIVERSITY

DONALD W. REYNOLDS CENTER FOR HEALTH SCIENCES

ARKANSAS STATE UNIVERSITY
JONESBORO, ARKANSAS

BRACKETT KRENNERICH
architects

Commission Number
12406

S301

Date: January 25, 2008

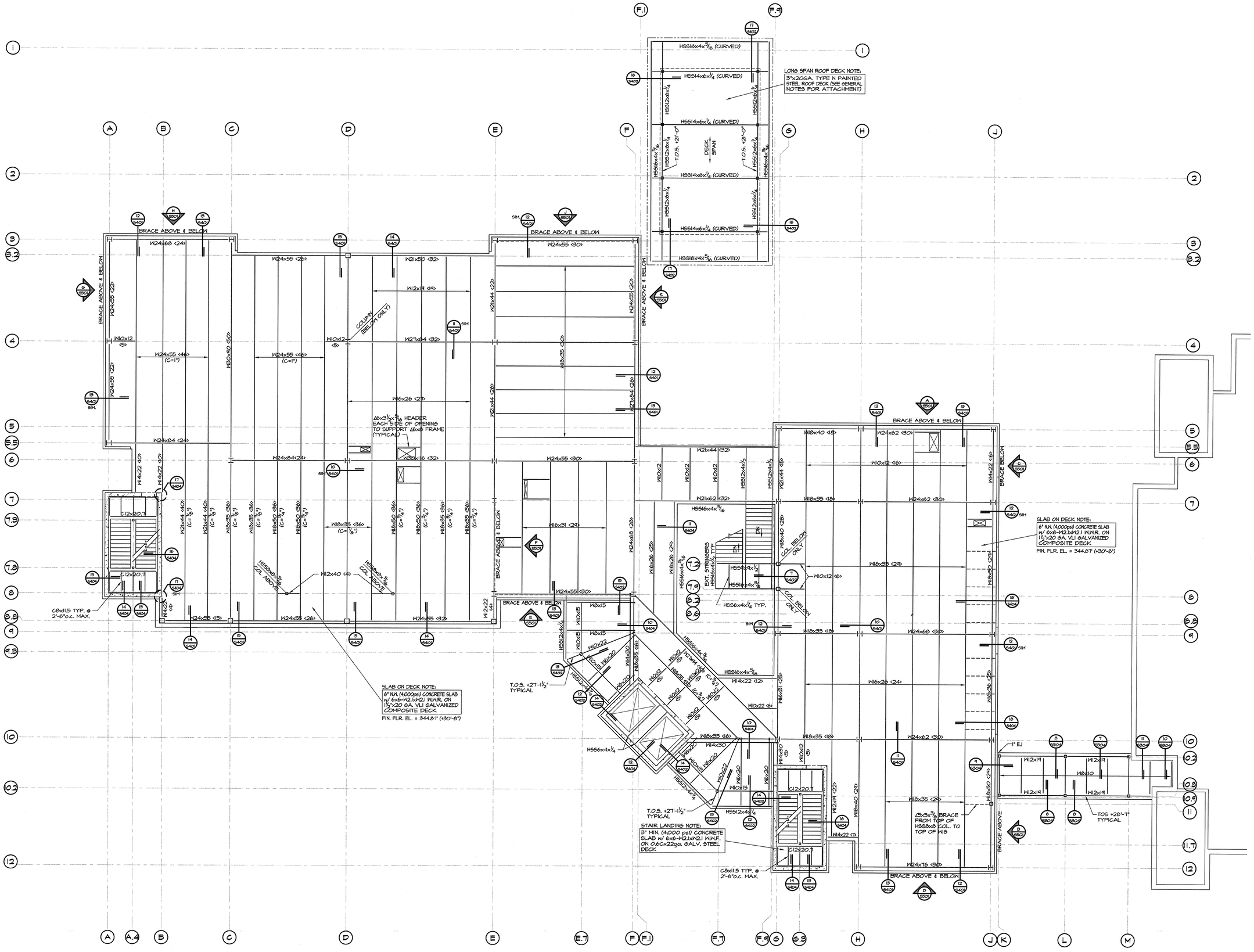

n THIRD FLOOR FRAMING PLAN

1/8"=1'-0"

ARKANSAS STATE UNIVERSITY

DONALD W. REYNOLDS CENTER FOR HEALTH SCIENCES

ARKANSAS STATE UNIVERSITY

JONESBORO, ARKANSAS

BRACKETT KRENNERICH architects

1801 Lake Huntington, Suite D - P.O. Box 1655, Jonesboro, Arkansas 72403-1655

870.932.4971 Fax 870.932.6976 www.bkarchitects.com

Commission Number 12406

S302

Date: January 25, 2008

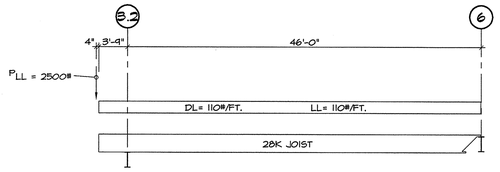

28K (SP-1) SPECIAL JOIST

LIMIT LL DEFLECTION TO 3/8" @ CANTILEVER

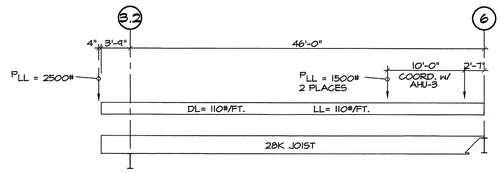

28K (SP-2) SPECIAL JOIST

LIMIT LL DEFLECTION TO 3/8" @ CANTILEVER

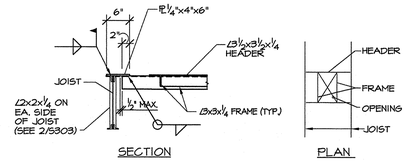

NOTE: VERIFY EXACT NUMBER, SIZE & LOCATION OF OPENINGS W/ ARCH. & MECH.

1 OPENING IN ROOF DETAIL

3/4"=1'-0"

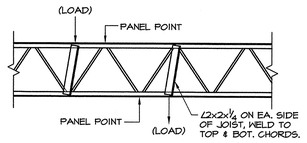

NOTE:
UNLESS OTHERWISE NOTED, ALL CONCENTRATED LOADS OCCURING @ PLACES OTHER THAN JOIST PANEL POINTS SHALL BE SUPPORTED AS SHOWN

2 CONCENTRATED LOAD ON JOIST DETAIL

NOT TO SCALE

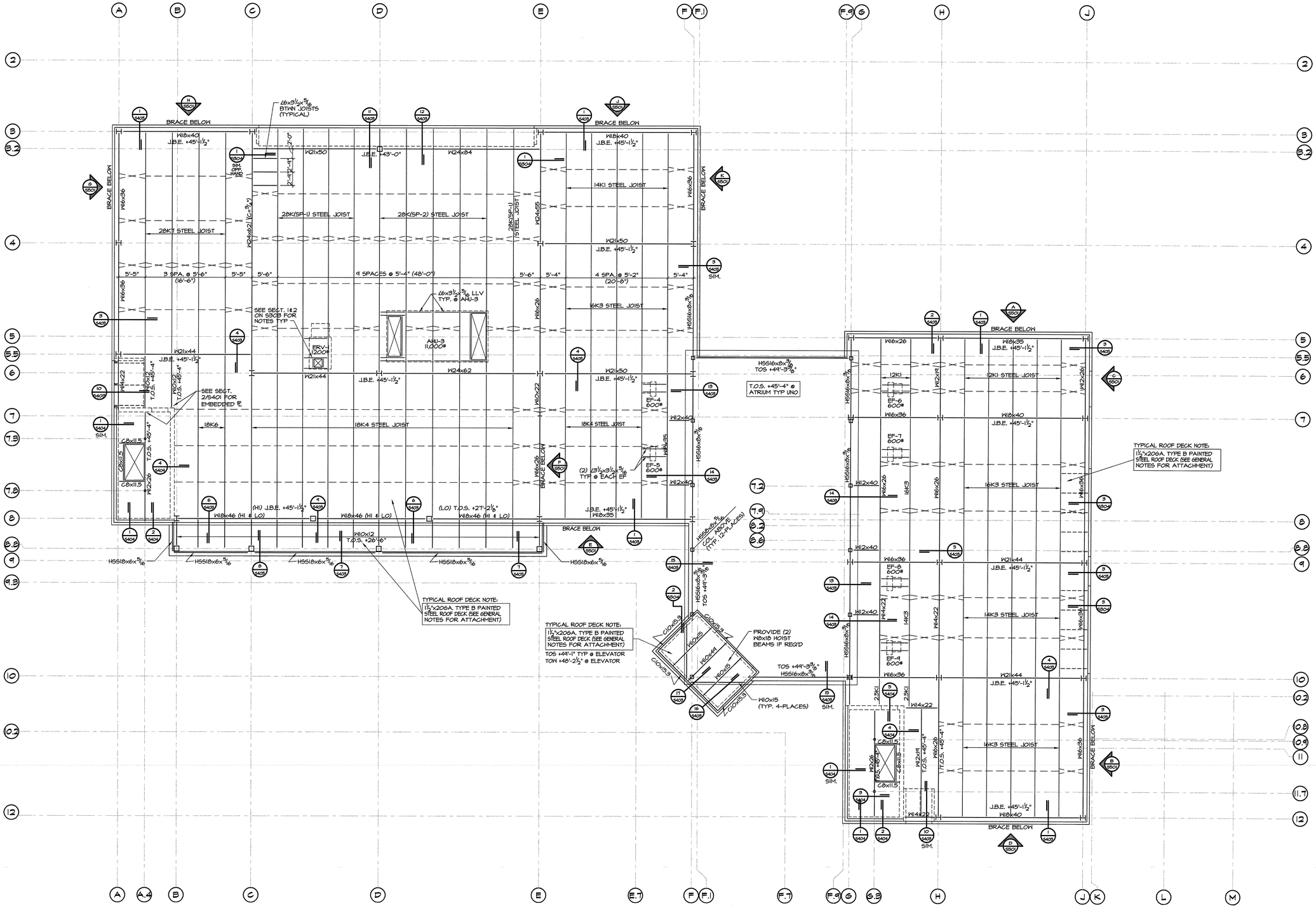

ROOF FRAMING PLAN

1/8"=1'-0"

TYPICAL ROOF DECK NOTE:
1 1/2"x20GA. TYPE B PAINTED STEEL ROOF DECK (SEE GENERAL NOTES FOR ATTACHMENT)

TYPICAL ROOF DECK NOTE:
1 1/2"x20GA. TYPE B PAINTED STEEL ROOF DECK (SEE GENERAL NOTES FOR ATTACHMENT)

ARKANSAS STATE UNIVERSITY

DONALD W. REYNOLDS CENTER FOR HEALTH SCIENCES

ARKANSAS STATE UNIVERSITY

JONESBORO, ARKANSAS

BRACKETT KRENNERICH architects

100 East Huntington, Suite 1D P.O. Box 1935 Jonesboro, Arkansas 72403-1935

870.932.0571 Fax: 870.932.8976 www.bkarchs.com

Commission Number
12406

S303

Date: January 25, 2008

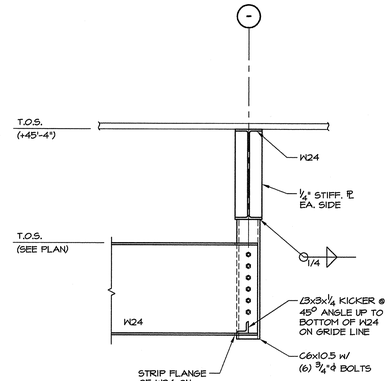

1 SECTION
3/4"=1'-0"

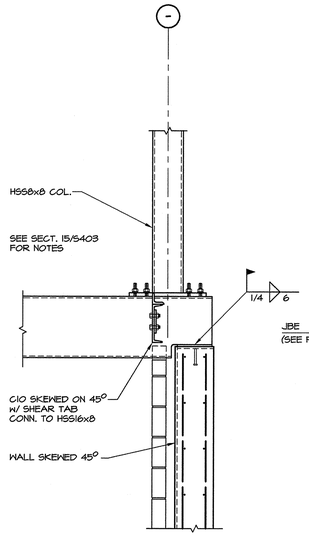

2 SECTION
3/4"=1'-0"

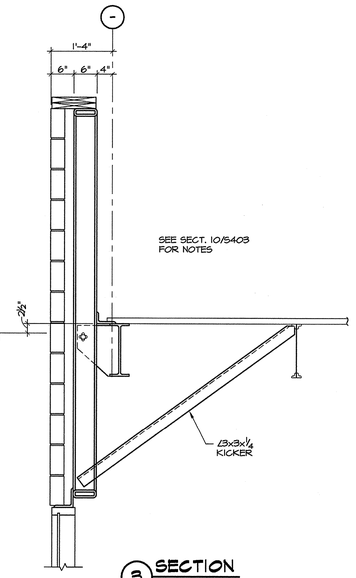

3 SECTION
3/4"=1'-0"

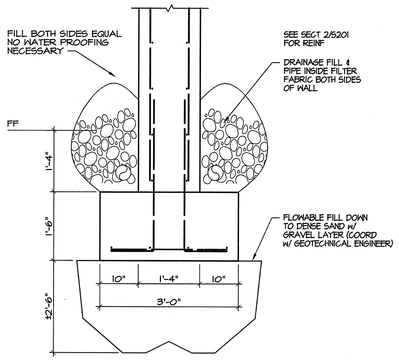

4 SECTION
3/4"=1'-0"

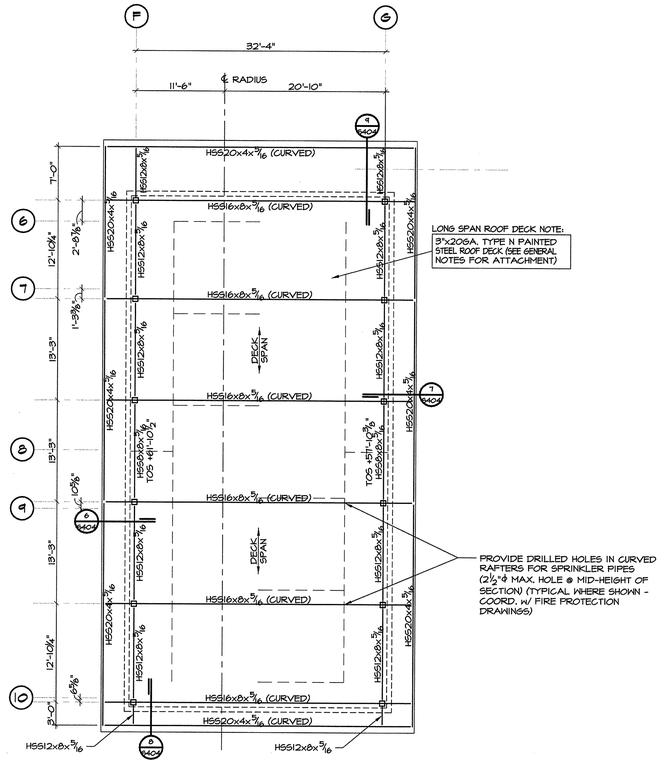

n HIGH ROOF FRAMING PLAN
1/8"=1'-0"

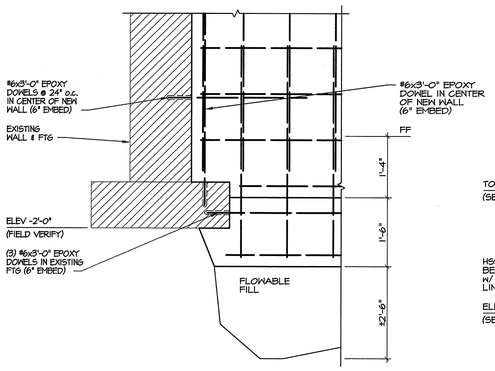

5 SECTION
3/4"=1'-0"

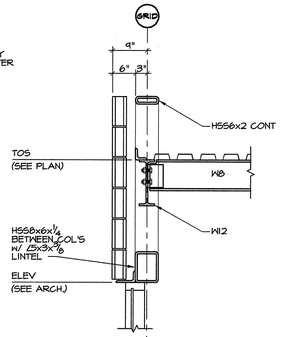

6 SECTION
3/4"=1'-0"

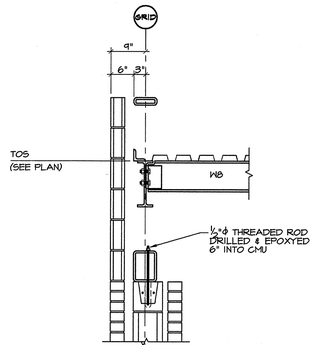

7 SECTION
3/4"=1'-0"

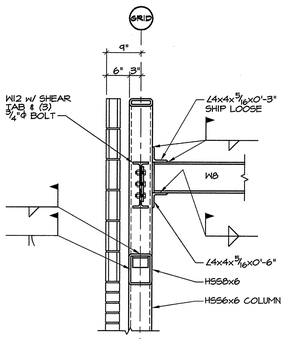

8 SECTION
3/4"=1'-0"

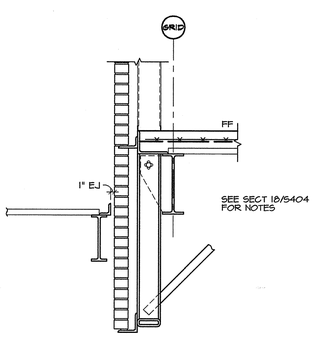

9 SECTION
3/4"=1'-0"

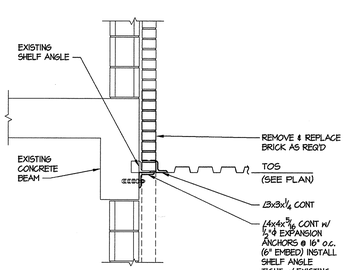

10 SECTION
3/4"=1'-0"

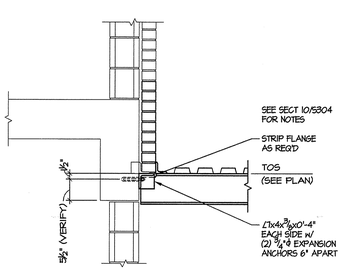

11 SECTION
3/4"=1'-0"

LINTEL SCHEDULE

WALL TYPE	UP TO 4'-0" OPENING	4'-1" TO 6'-0" OPENING	6'-1" TO 8'-0" OPENING
4" VENEER	L3 1/2x3 1/2x1/4	L5x3 1/2x5/16 (LLV)	L6x3 1/2x5/16 (LLV)
4" INTERIOR BLOCK	(2) L1 1/2x1 1/2x3/16	———	———
6" BLOCK	6" WIDE x 8" HIGH LINTEL BLK. w/ (2) #5	(2) L3 1/2x2 1/2x3/16	———
8" BLOCK	8"x8" LINTEL BLK. w/ (2) #5	(2) L5x3 1/2x5/16 (LLV)	(2) L6x3 1/2x5/16 (LLV)
8" BRICK	(2) L3 1/2x3 1/2x1/4	(2) L5x3 1/2x5/16 (LLV)	(2) L6x3 1/2x5/16 (LLV)
12" (8" BLK. & 4" BRICK)	8"x8" LINTEL BLK. w/ (2) #5 & L3 1/2x3 1/2x1/4	(3) L5x3 1/2x5/16 (LLV)	(3) L6x3 1/2x5/16 (LLV)

1. LINTEL SCHEDULE APPLIES UNLESS NOTED OR DETAILED
2. WHERE ANGLES ARE BACK TO BACK, WELD TOGETHER WITH LONG LEGS VERTICAL (LLV), @ 12" INTERVALS.
3. BEAR ANGLE LINTELS 8" @ EACH END, MIN. TYP. U.N.O. BEAR BOND BEAM LINTELS 2'-0" MIN. TYP. U.N.O. OTHERWISE.
4. USE 3,000 PSI CONCRETE IN LINTEL BLOCKS.
5. FILL CELLS BELOW LINTEL BEARINGS W/ CONCRETE FULL HEIGHT, (PROVIDE (1) #5 VERTICAL BAR IN EACH CELL).
6. PROVIDE 1/4" CLOSURE PL BETWEEN LINTEL ANGLE AND WINDOW FRAME, DOOR FRAME OR BACK-UP WALL AS REQUIRED. WELD CLOSURE PL TO LINTEL ANGLE W/ CONTINUOUS WELD AND GRIND SMOOTH.

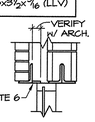

ARKANSAS STATE UNIVERSITY

DONALD W. REYNOLDS CENTER FOR HEALTH SCIENCES

ARKANSAS STATE UNIVERSITY
JONESBORO, ARKANSAS

BRACKETT KRENNERICH architects

1001 East Huntington, Suite D · P.O. Box 1655 · Jonesboro, Arkansas 72403-1655
501-932-0101 · FAX 501-932-0103 · www.bkarchitects.com

Commission Number 12406

S304

Date: January 25, 2008

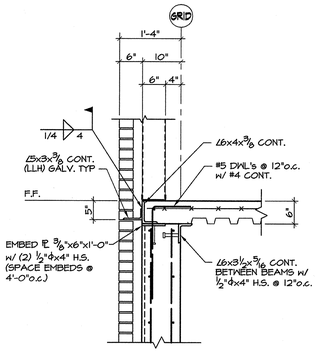

1 SECTION
3/4"=1'-0"

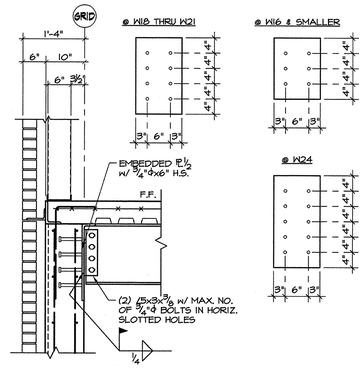

2 SECTION
3/4"=1'-0"

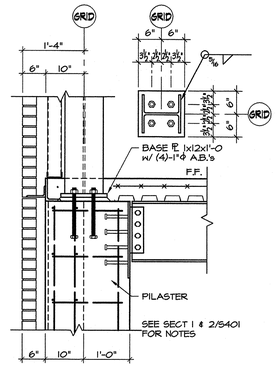

3 SECTION
3/4"=1'-0"

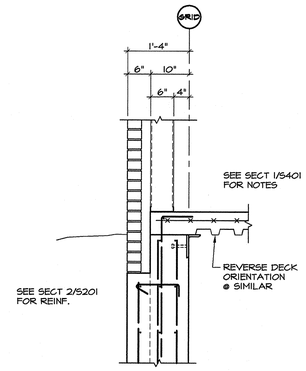

4 SECTION
3/4"=1'-0"

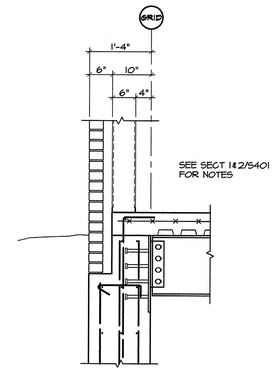

5 SECTION
3/4"=1'-0"

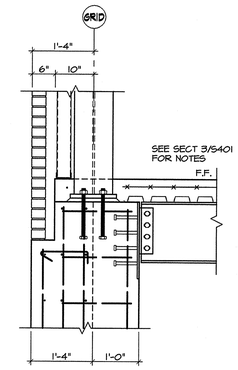

6 SECTION
3/4"=1'-0"

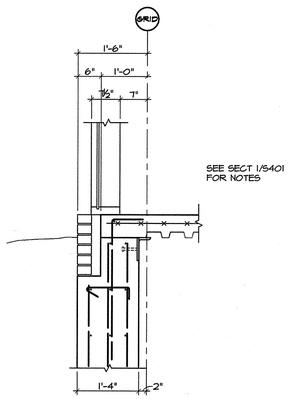

7 SECTION
3/4"=1'-0"

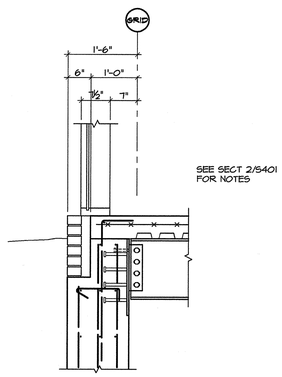

8 SECTION
3/4"=1'-0"

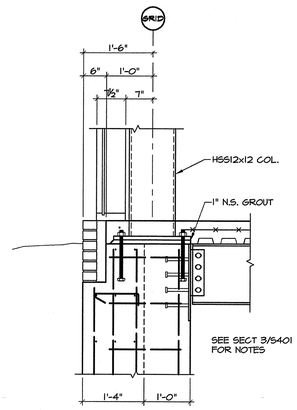

9 SECTION
3/4"=1'-0"

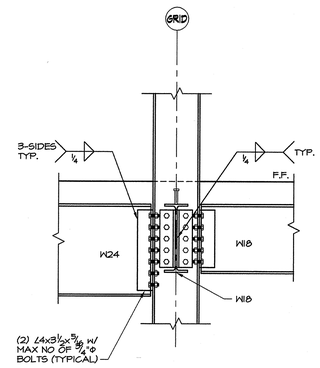

10 SECTION
3/4"=1'-0"

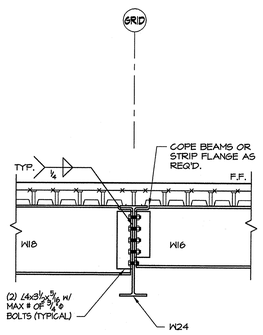

11 SECTION
3/4"=1'-0"

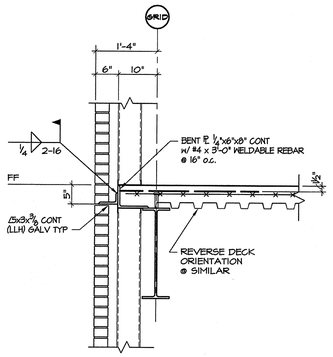

12 SECTION
3/4"=1'-0"

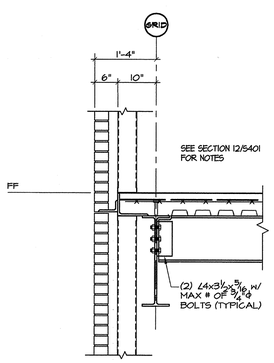

13 SECTION
3/4"=1'-0"

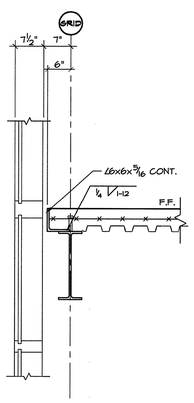

14 SECTION
3/4"=1'-0"

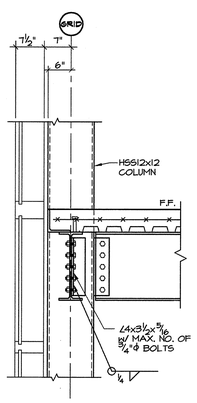

15 SECTION
3/4"=1'-0"

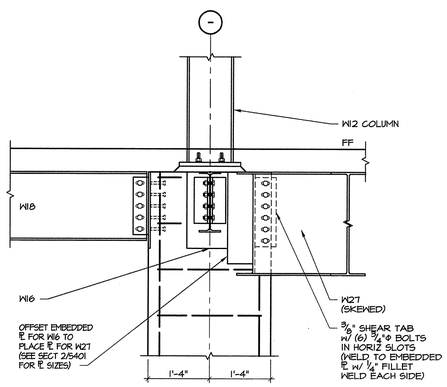

16 SECTION
3/4"=1'-0"

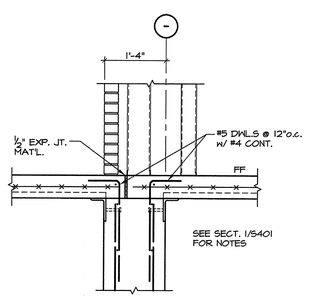

17 SECTION
3/4"=1'-0"

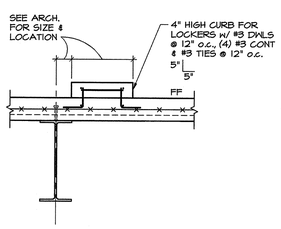

18 SECTION
3/4"=1'-0"

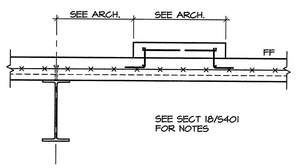

19 SECTION
3/4"=1'-0"

ARKANSAS STATE UNIVERSITY

DONALD W. REYNOLDS CENTER FOR HEALTH SCIENCES

ARKANSAS STATE UNIVERSITY
JONESBORO, ARKANSAS

BRACKETT KRENNERICH architects
1001 East Huntington, Suite D P.O. Box 1655 Jonesboro, Arkansas 72403-1655
870/932-0571 Fax 870/932-8876 www.bkarchs.com

Commission Number 12406

S401

Date: January 25, 2008

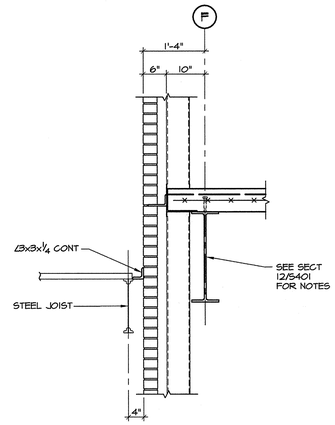

1 SECTION
3/4"=1'-0"

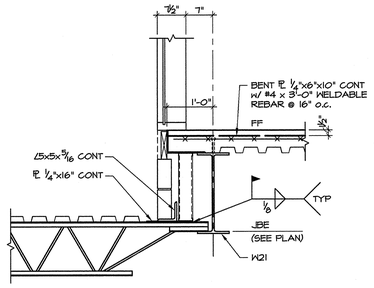

2 SECTION
3/4"=1'-0"

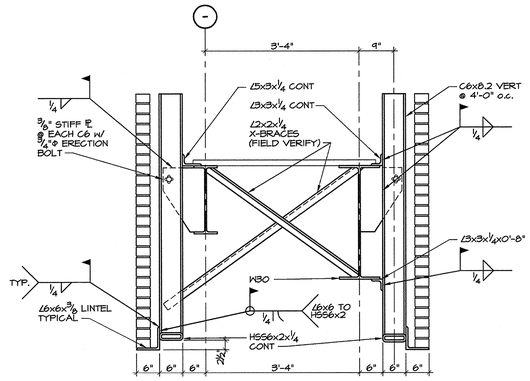

3 SECTION
3/4"=1'-0"

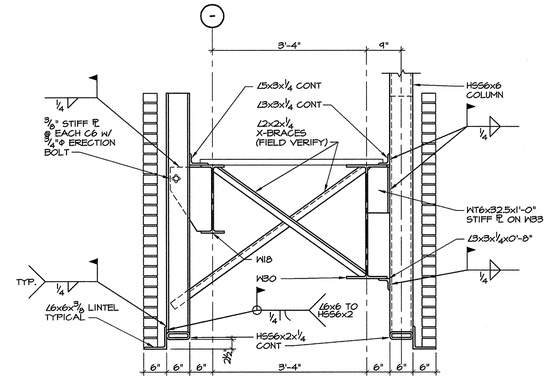

4 SECTION
3/4"=1'-0"

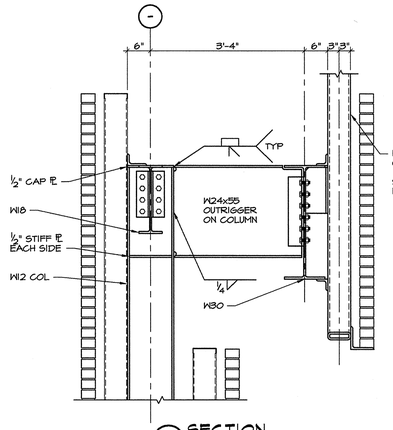

5 SECTION
3/4"=1'-0"

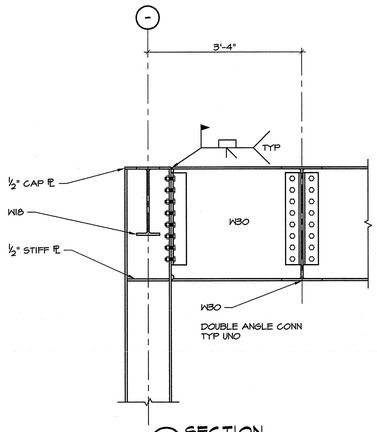

6 SECTION
3/4"=1'-0"

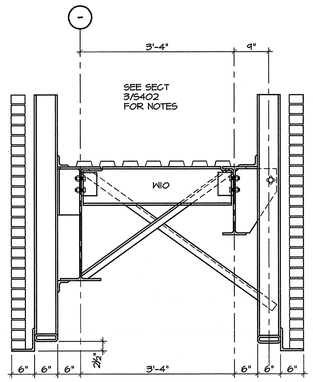

7 SECTION
3/4"=1'-0"

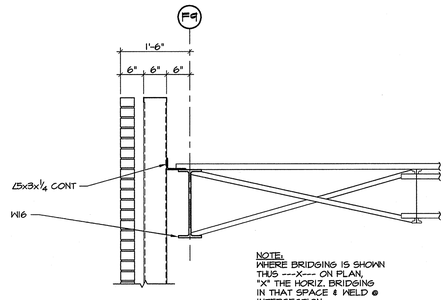

8 SECTION
3/4"=1'-0"

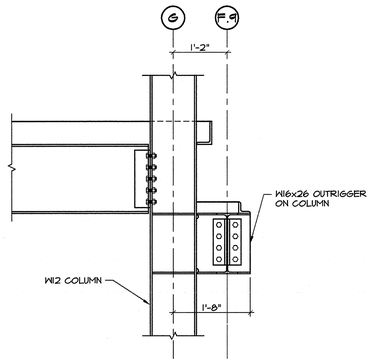

9 SECTION
3/4"=1'-0"

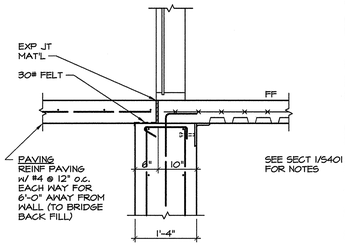

10 SECTION
3/4"=1'-0"

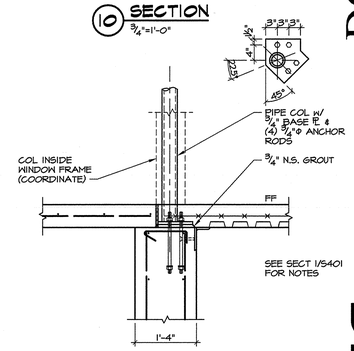

11 SECTION
3/4"=1'-0"

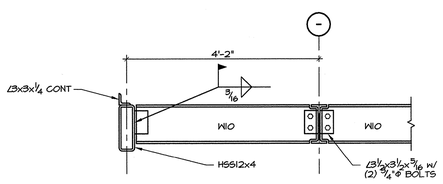

12 SECTION
3/4"=1'-0"

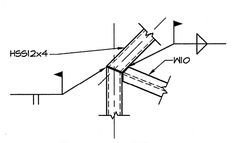

13A PLAN DETAIL
3/4"=1'-0"

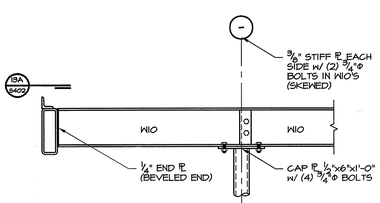

13 SECTION
3/4"=1'-0"

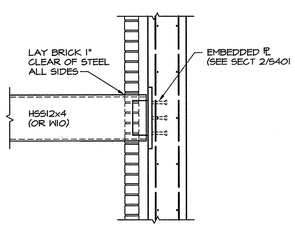

14 SECTION
3/4"=1'-0"

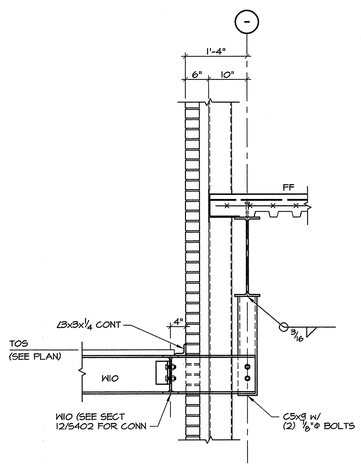

15 SECTION
3/4"=1'-0"

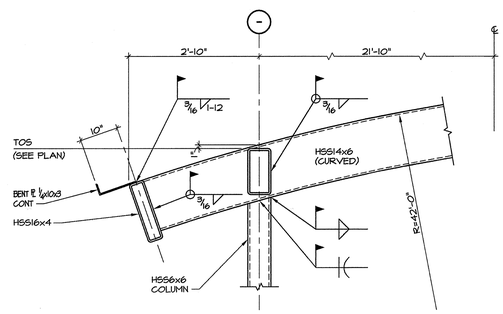

16 SECTION
3/4"=1'-0"

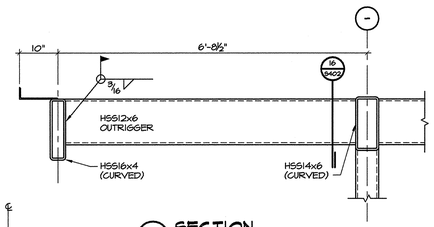

17 SECTION
3/4"=1'-0"

ARKANSAS STATE UNIVERSITY

DONALD W. REYNOLDS CENTER FOR HEALTH SCIENCES

ARKANSAS STATE UNIVERSITY
JONESBORO, ARKANSAS

BRACKETT KRENNERICH architects

1801 East Huntington, Suite D P.O. Box 1555 Jonesboro, Arkansas 72403-1555
870-932-0576 Fax 870-932-0575 www.bkarchts.com

Commission Number 12406

S402

Date: January 25, 2008

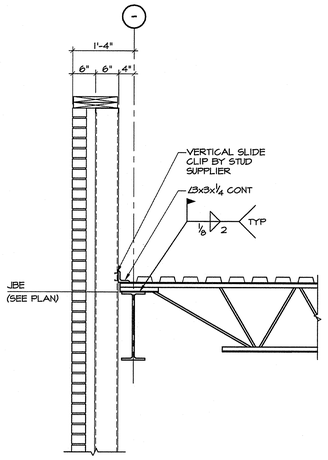

1 SECTION
3/4"=1'-0"

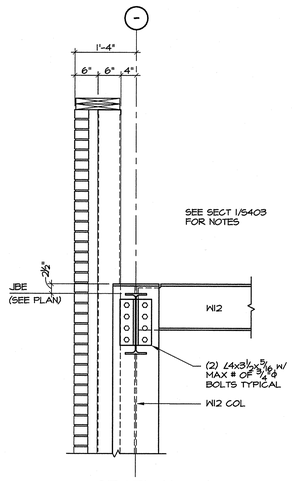

2 SECTION
3/4"=1'-0"

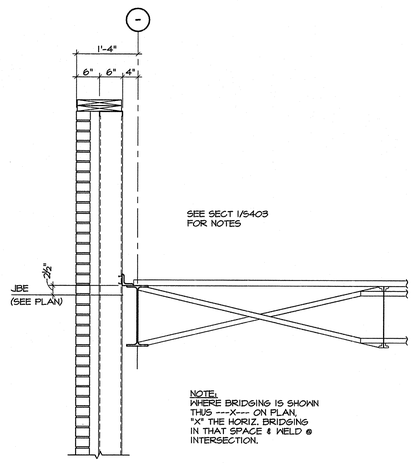

3 SECTION
3/4"=1'-0"

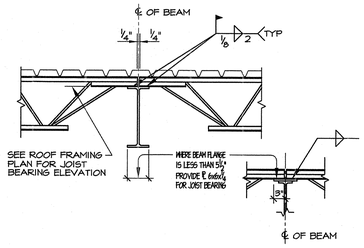

4 SECTION
3/4"=1'-0"

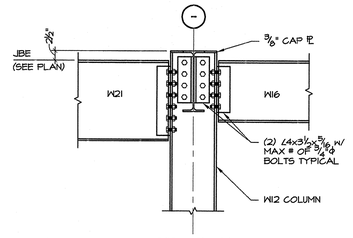

5 SECTION
3/4"=1'-0"

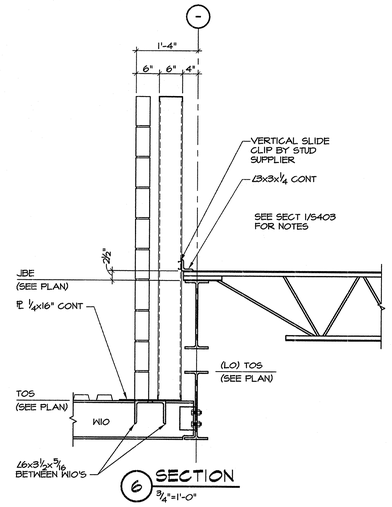

6 SECTION
3/4"=1'-0"

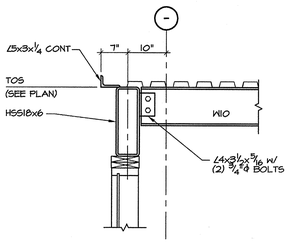

7 SECTION
3/4"=1'-0"

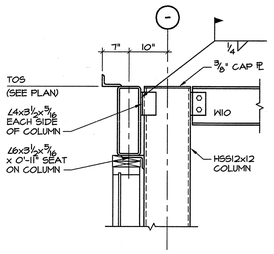

8 SECTION
3/4"=1'-0"

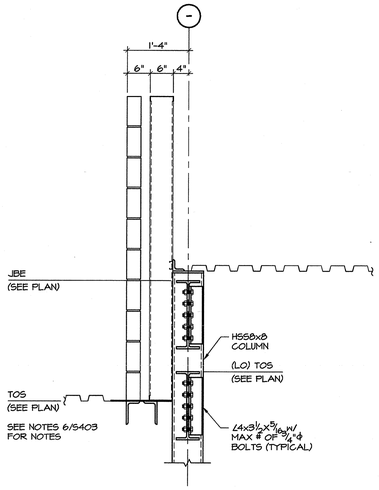

9 SECTION
3/4"=1'-0"

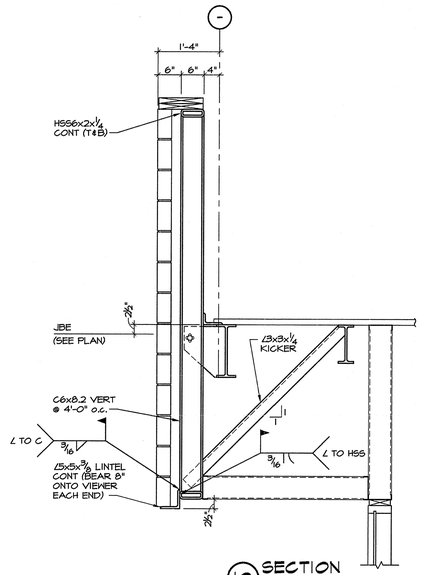

10 SECTION
3/4"=1'-0"

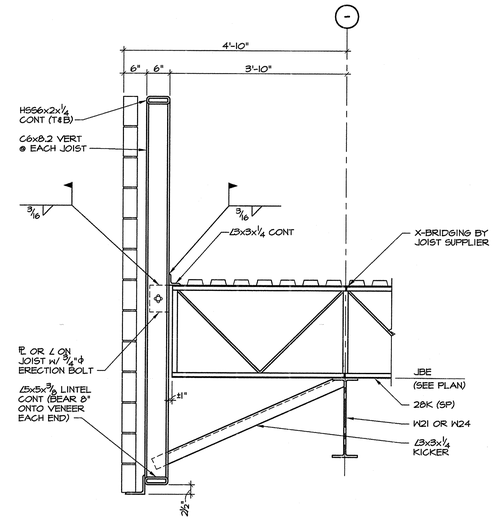

11 SECTION
3/4"=1'-0"

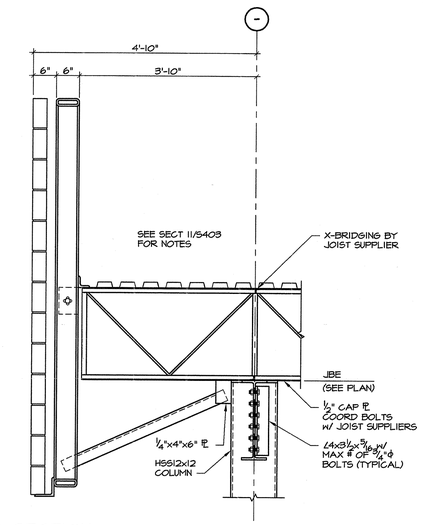

12 SECTION
3/4"=1'-0"

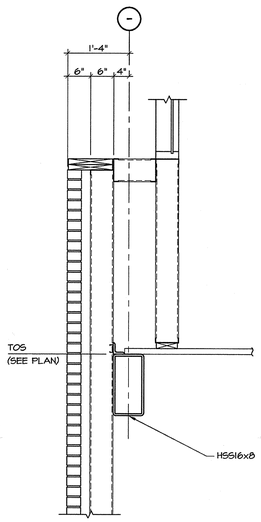

13 SECTION
3/4"=1'-0"

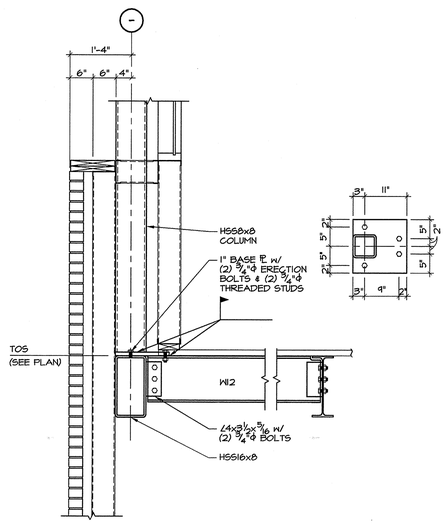

14 SECTION
3/4"=1'-0"

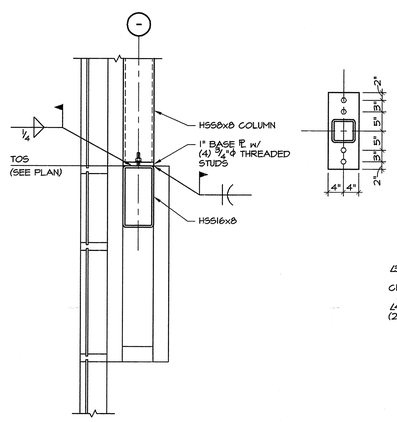

15 SECTION
3/4"=1'-0"

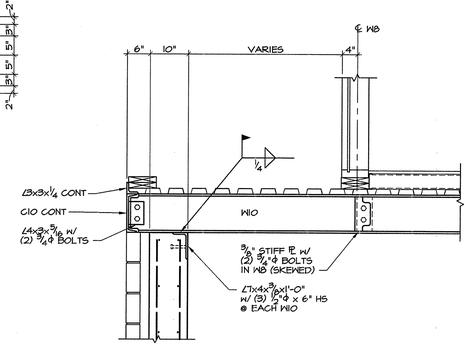

16 SECTION
3/4"=1'-0"

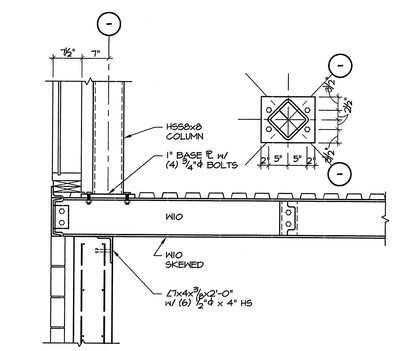

17 SECTION
3/4"=1'-0"

ARKANSAS STATE UNIVERSITY

DONALD W. REYNOLDS CENTER FOR HEALTH SCIENCES

ARKANSAS STATE UNIVERSITY
JONESBORO, ARKANSAS

BRACKETT KRENNERICH architects

1001 East Huntington, Suite B1 · P O Box 1655 · Jonesboro, Arkansas 72403-1655
870-932-0571 Fax 870-932-0976 www.bkarchitects.com

Commission Number
12406

S403

Date: January 25, 2008

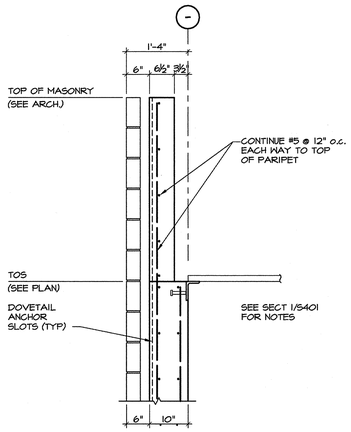

1 SECTION
3/4"=1'-0"

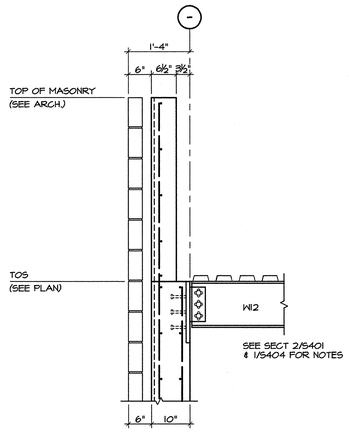

2 SECTION
3/4"=1'-0"

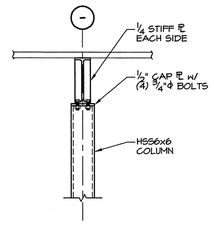

3 SECTION
3/4"=1'-0"

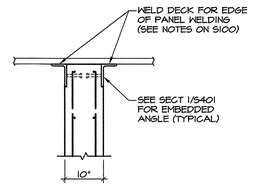

4 SECTION
3/4"=1'-0"

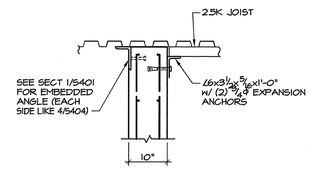

5 SECTION
3/4"=1'-0"

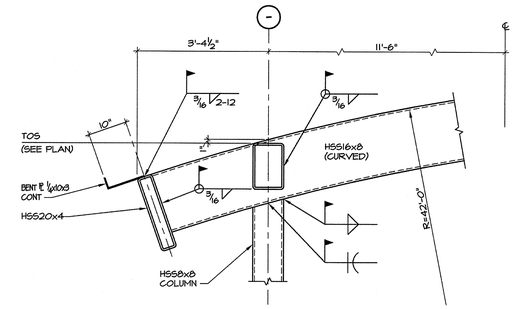

6 SECTION
3/4"=1'-0"

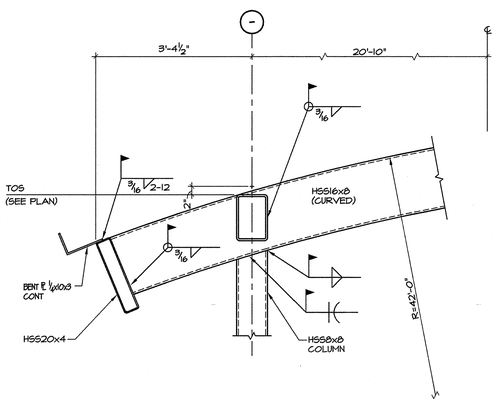

7 SECTION
3/4"=1'-0"

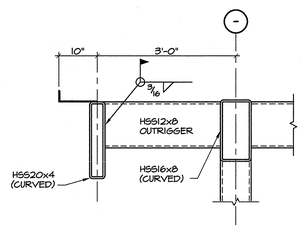

8 SECTION
3/4"=1'-0"

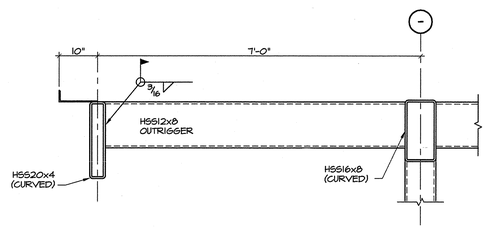

9 SECTION
3/4"=1'-0"

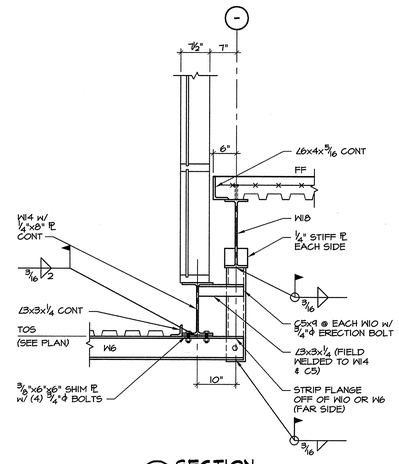

10 SECTION
3/4"=1'-0"

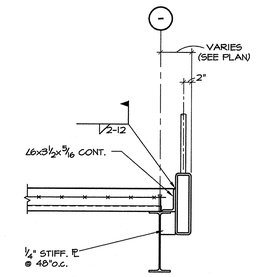

11 SECTION
3/4"=1'-0"

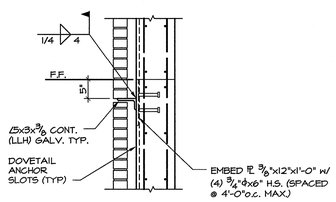

12 SECTION
3/4"=1'-0"

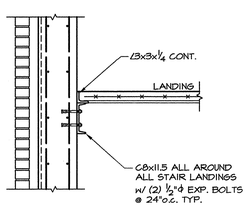

13 SECTION
3/4"=1'-0"

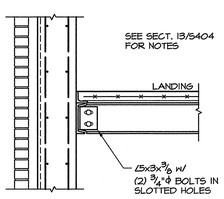

14 SECTION
3/4"=1'-0"

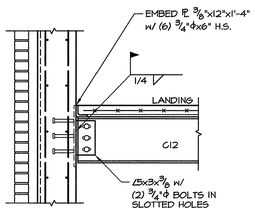

15 SECTION
3/4"=1'-0"

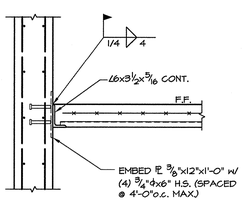

16 SECTION
3/4"=1'-0"

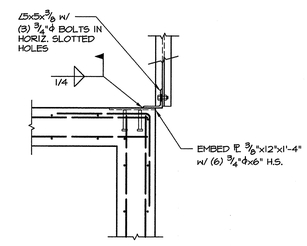

17 PLAN DETAIL
3/4"=1'-0"

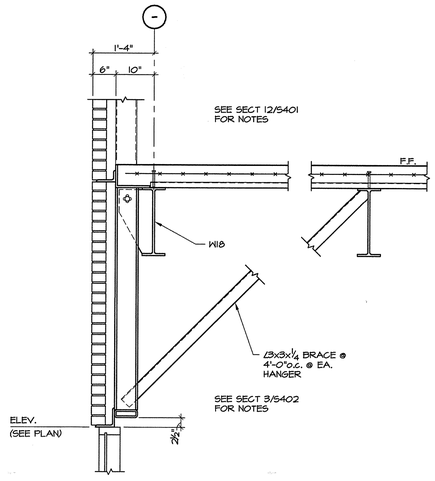

18 SECTION
3/4"=1'-0"

ARKANSAS STATE UNIVERSITY

DONALD W. REYNOLDS CENTER FOR HEALTH SCIENCES

ARKANSAS STATE UNIVERSITY
JONESBORO, ARKANSAS

BRACKETT KRENNERICH architects
1001 East Huntington, Suite D - P.O. Box 1655 - Jonesboro, Arkansas 72403-1655
(870)932-4957 Fax (870)932-6976 www.bkarchs.com

Commission Number
12406

S404

Date: January 25, 2008

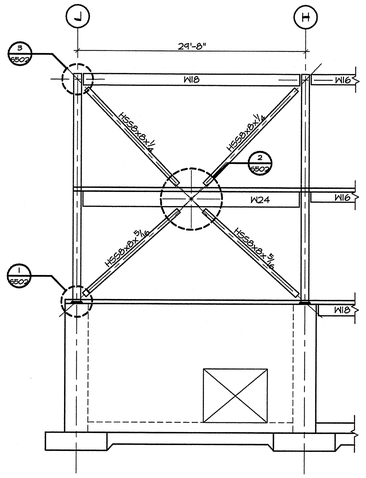

A BRACE ELEVATION @ GRID 5
1/8"=1'-0"

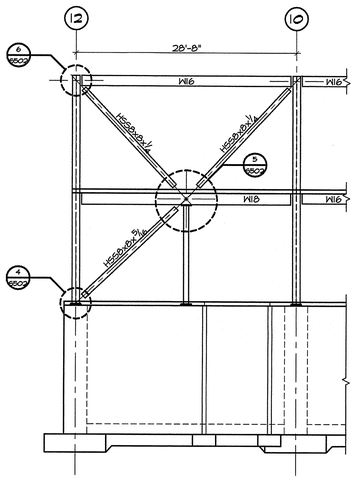

B BRACE ELEVATION @ GRID J
1/8"=1'-0"

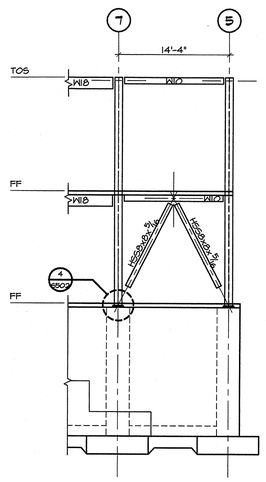

C BRACE ELEVATION @ GRID J
1/8"=1'-0"

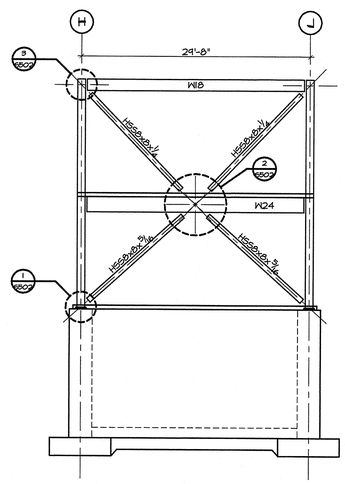

D BRACE ELEVATION @ GRID 12
1/8"=1'-0"

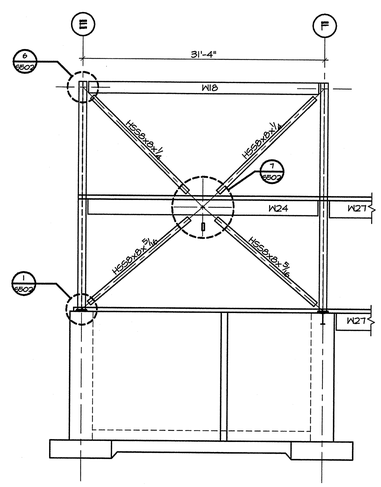

E BRACE ELEVATION @ GRID 8
1/8"=1'-0"

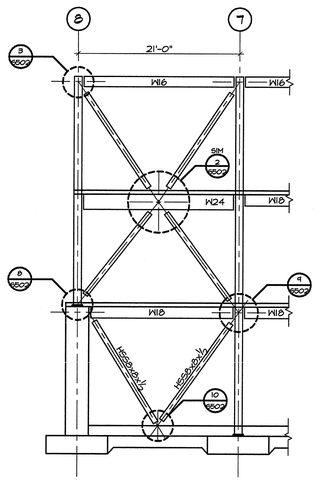

F BRACE ELEVATION @ GRID E
1/8"=1'-0"

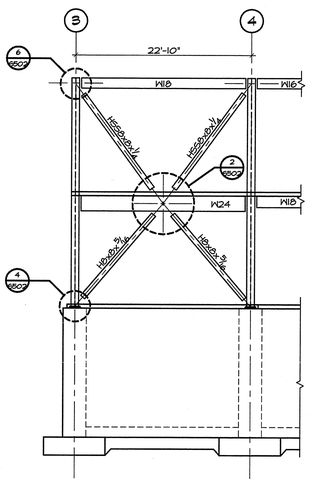

G BRACE ELEVATION @ GRID A
1/8"=1'-0"

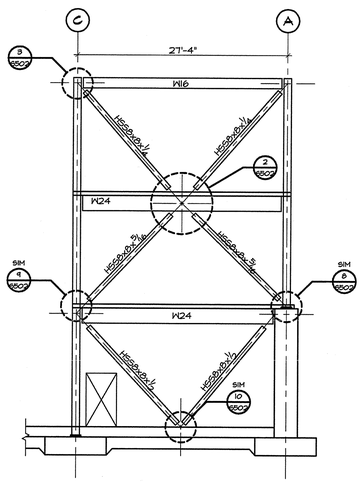

H BRACE ELEVATION @ GRID 3
1/8"=1'-0"

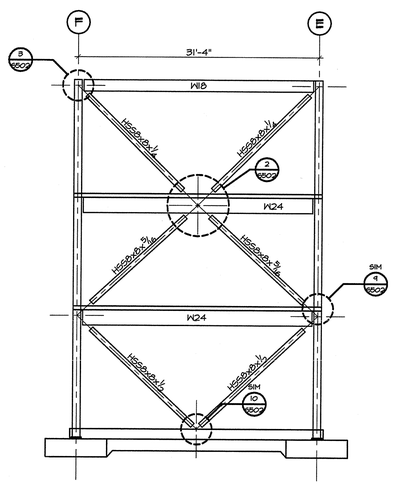

J BRACE ELEVATION @ GRID 3
1/8"=1'-0"

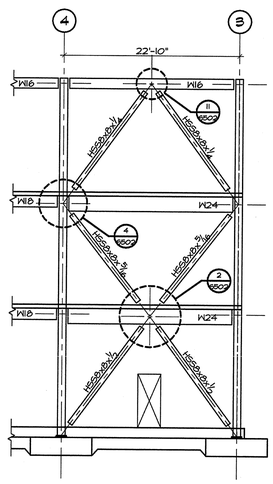

K BRACE ELEVATION @ GRID F
1/8"=1'-0"

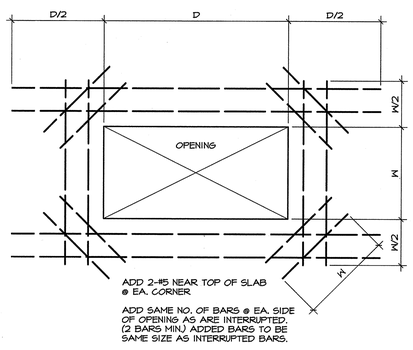

REINF. AROUND OPENINGS IN STRUCTURAL WALLS

ARKANSAS STATE UNIVERSITY

DONALD W. REYNOLDS CENTER FOR HEALTH SCIENCES

ARKANSAS STATE UNIVERSITY
JONESBORO, ARKANSAS

BRACKETT KRENNERICH architects

700 East Huntington, Suite D P.O. Box 1665 Jonesboro, Arkansas 72403-1665
870-932-0571 Fax 870-932-0976 www.bkarchs.com

Commission Number
12406

S501

Date: January 25, 2008

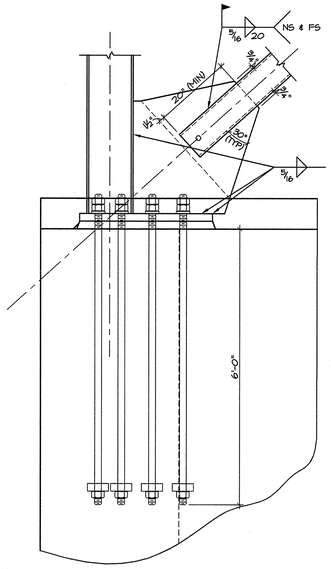

1 SECTION
3/4"=1'-0"

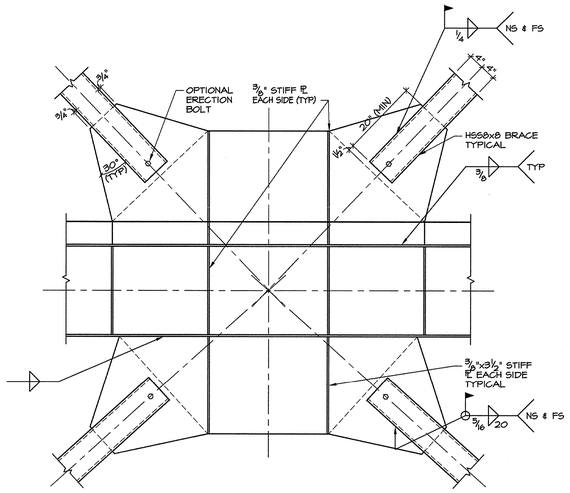

2 SECTION
3/4"=1'-0"

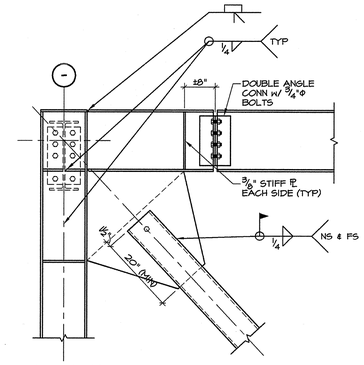

3 SECTION
3/4"=1'-0"

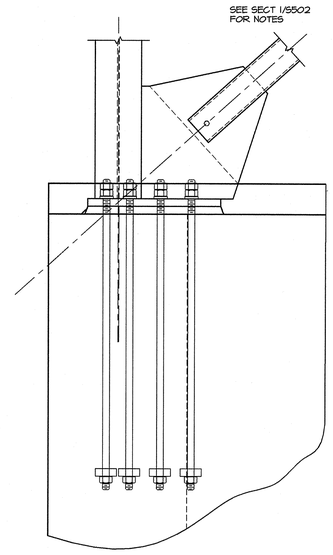

4 SECTION
3/4"=1'-0"

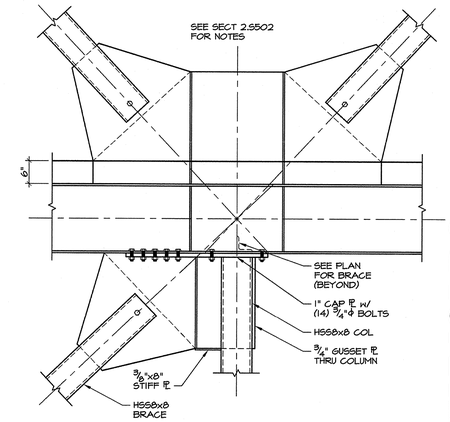

5 SECTION
3/4"=1'-0"

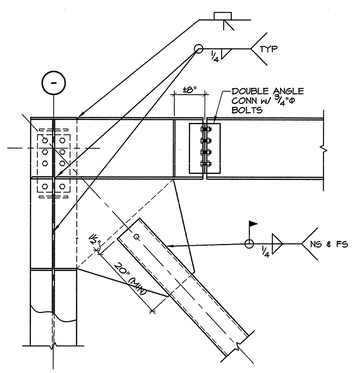

6 SECTION
3/4"=1'-0"

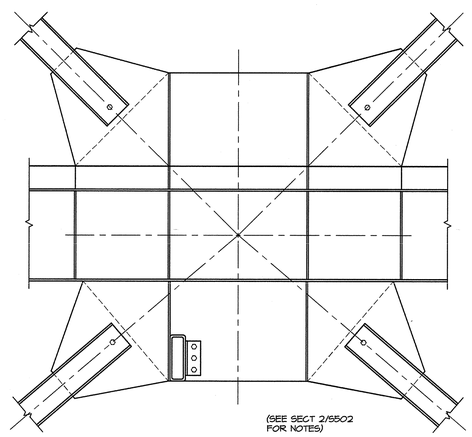

7 SECTION
3/4"=1'-0"

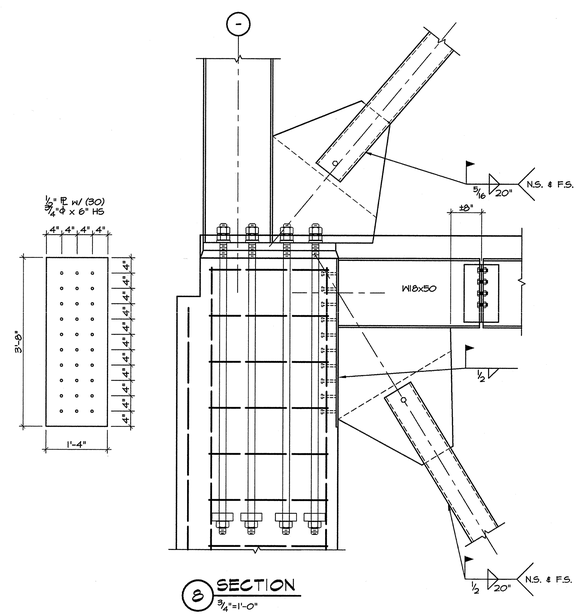

8 SECTION
3/4"=1'-0"

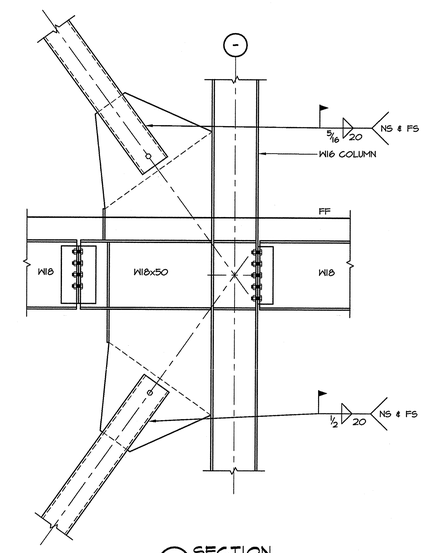

9 SECTION
3/4"=1'-0"

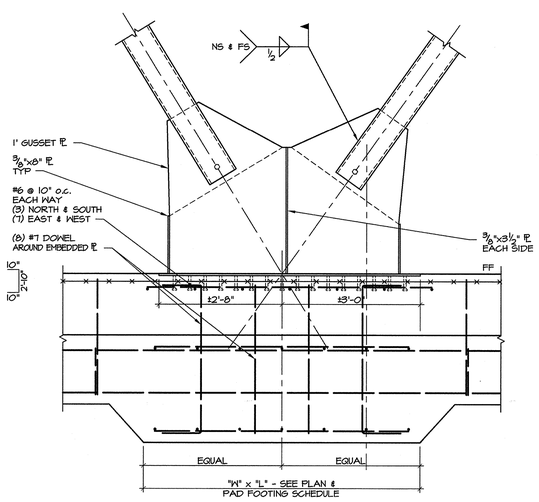

10 SECTION
3/4"=1'-0"

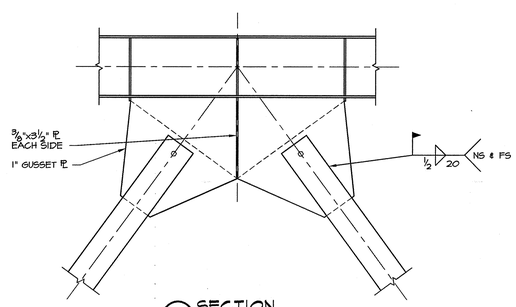

11 SECTION
3/4"=1'-0"

ARKANSAS STATE UNIVERSITY

DONALD W. REYNOLDS CENTER FOR HEALTH SCIENCES

ARKANSAS STATE UNIVERSITY
JONESBORO, ARKANSAS

BRACKETT KRENNERICH architects
1001 East Huntington, Suite D · P.O. Box 1655 · Jonesboro, Arkansas 72403-1655
870-932-2621 · 870-972-2525 · www.bkarchitects.com

Commission Number 12406

S502

Date: January 25, 2008

ARKANSAS STATE UNIVERSITY

DONALD W. REYNOLDS CENTER FOR HEALTH SCIENCES

ARKANSAS STATE UNIVERSITY

JONESBORO, ARKANSAS

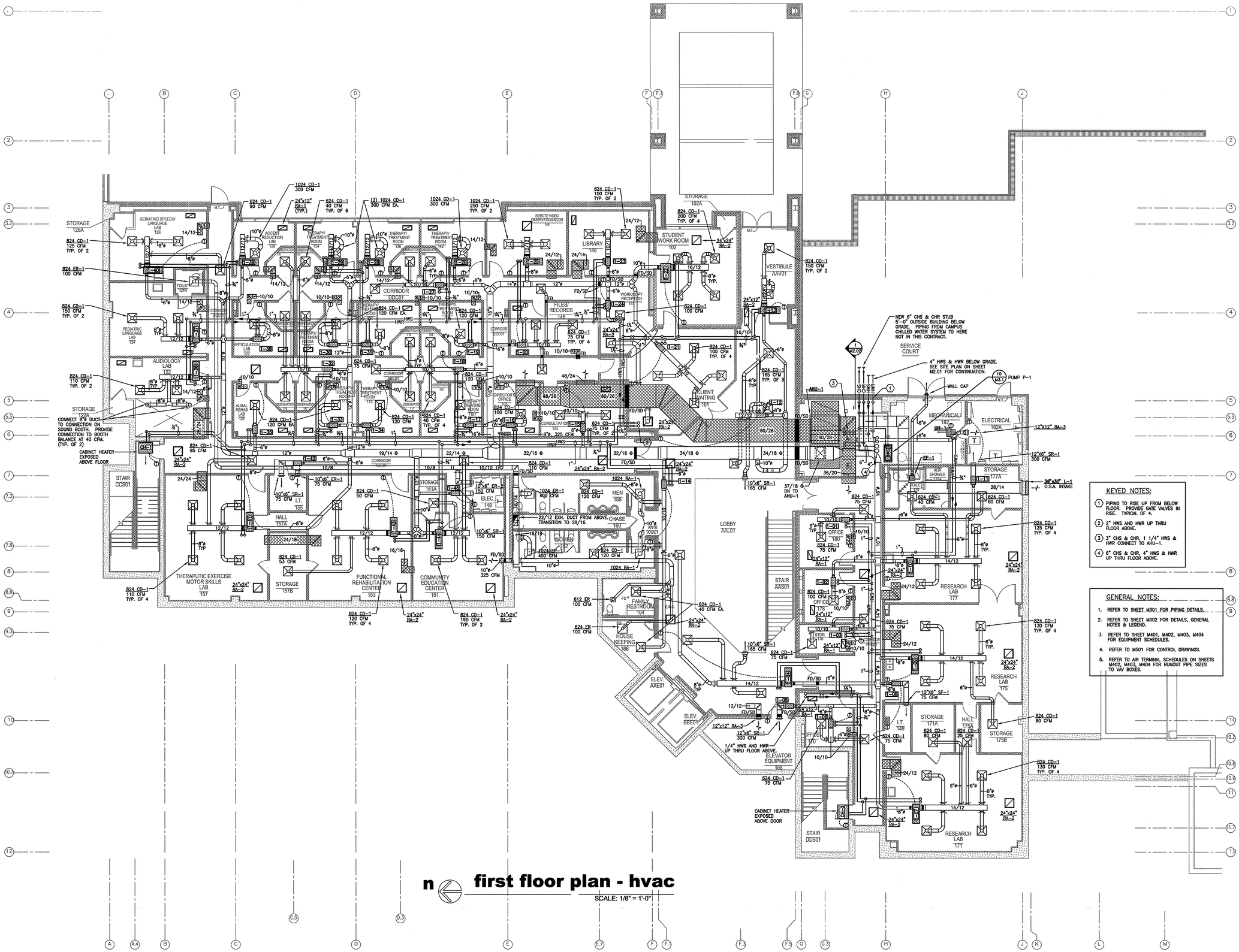

n first floor plan - hvac

SCALE: 1/8" = 1'-0"

KEYED NOTES:

1. PIPING TO RISE UP FROM BELOW FLOOR. PROVIDE GATE VALVES IN RISE. TYPICAL OF 4.
2. 2" HWS AND HWR UP THRU FLOOR ABOVE.
3. 3" CHS & CHR, 1 1/4" HWS & HWR CONNECT TO AHU-1.
4. 6" CHS & CHR, 4" HWS & HWR UP THRU FLOOR ABOVE.

GENERAL NOTES:

1. REFER TO SHEET M301 FOR PIPING DETAILS.
2. REFER TO SHEET M302 FOR DETAILS, GENERAL NOTES & LEGEND.
3. REFER TO SHEET M401, M402, M403, M404 FOR EQUIPMENT SCHEDULES.
4. REFER TO M501 FOR CONTROL DRAWINGS.
5. REFER TO AIR TERMINAL SCHEDULES ON SHEETS M402, M403, M404 FOR RUNOUT PIPE SIZES TO VAV BOXES.

BRACKETT KRENNERICH architects

100 East Huntington, Suite D P.O. Box 1655 Jonesboro, Arkansas 72403-1655

870-932-0571 Fax 870-932-0975 www.bkarchits.com

Commission Number 12406

M101

Date: January 25, 2008

ARKANSAS STATE UNIVERSITY

DONALD W. REYNOLDS CENTER FOR HEALTH SCIENCES

ARKANSAS STATE UNIVERSITY

JONESBORO, ARKANSAS

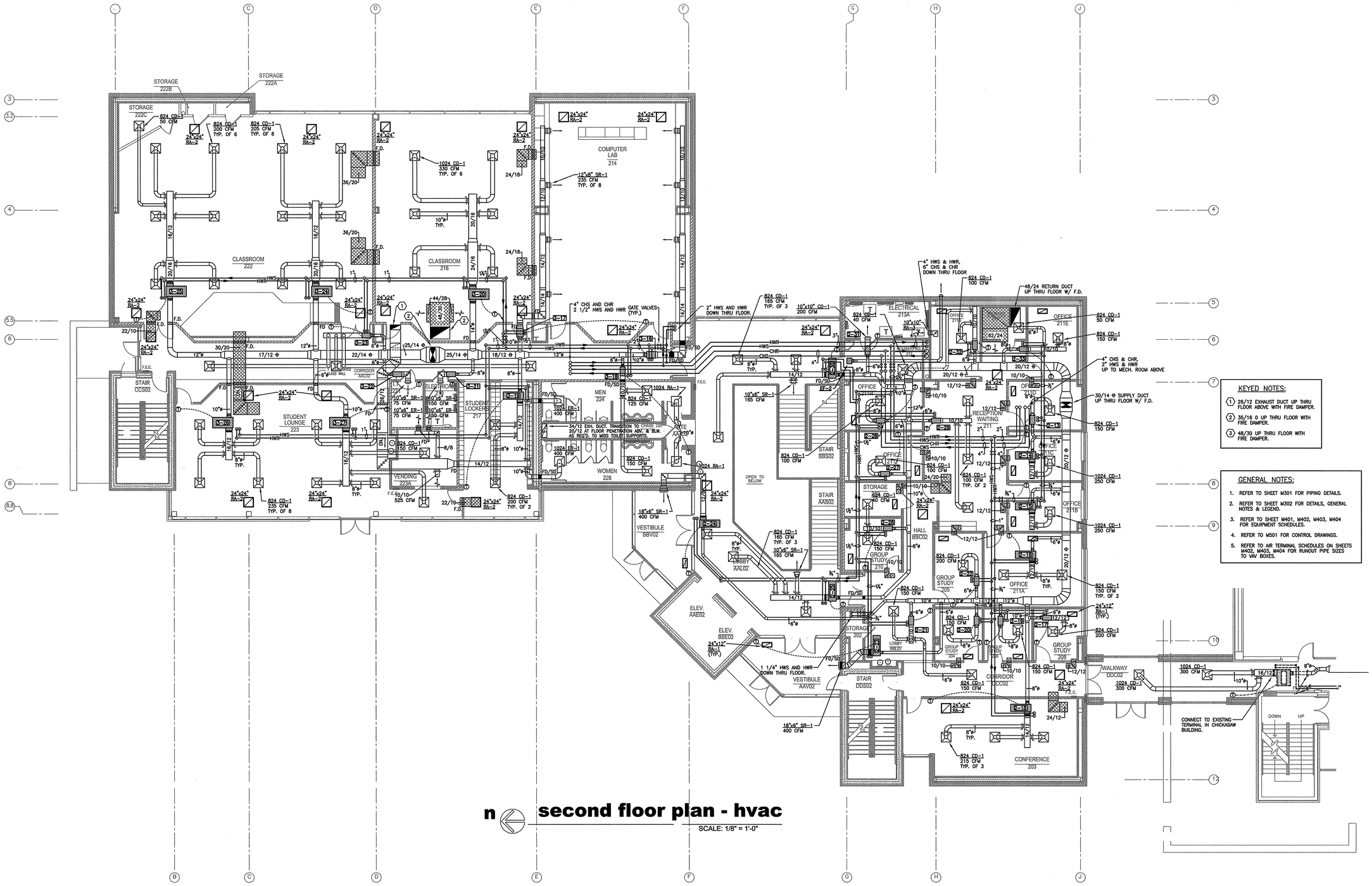

n

second floor plan - hvac

SCALE: 1/8" = 1'-0"

KEYED NOTES:

1. 26/12 EXHAUST DUCT UP THRU FLOOR ABOVE WITH FIRE DAMPER.
2. 35/16 O UP THRU FLOOR WITH FIRE DAMPER.
3. 48/30 UP THRU FLOOR WITH FIRE DAMPER.

GENERAL NOTES:

1. REFER TO SHEET M301 FOR PIPING DETAILS.
2. REFER TO SHEET M302 FOR DETAILS, GENERAL NOTES & LEGEND.
3. REFER TO SHEET M401, M402, M403, M404 FOR EQUIPMENT SCHEDULES.
4. REFER TO M501 FOR CONTROL DRAWINGS.
5. REFER TO AIR TERMINAL SCHEDULES ON SHEETS M402, M403, M404 FOR RUNOUT PIPE SIZES TO VAV BOXES.

BRACKETT KRENNERICH architects

100 East Huntington, Suite D P.O. Box 1655 Jonesboro, Arkansas 72403-1655

870-932-0571 Fax 870-932-0975 www.bkarchts.com

Commission Number 12406

M102

Date: January 25, 2008

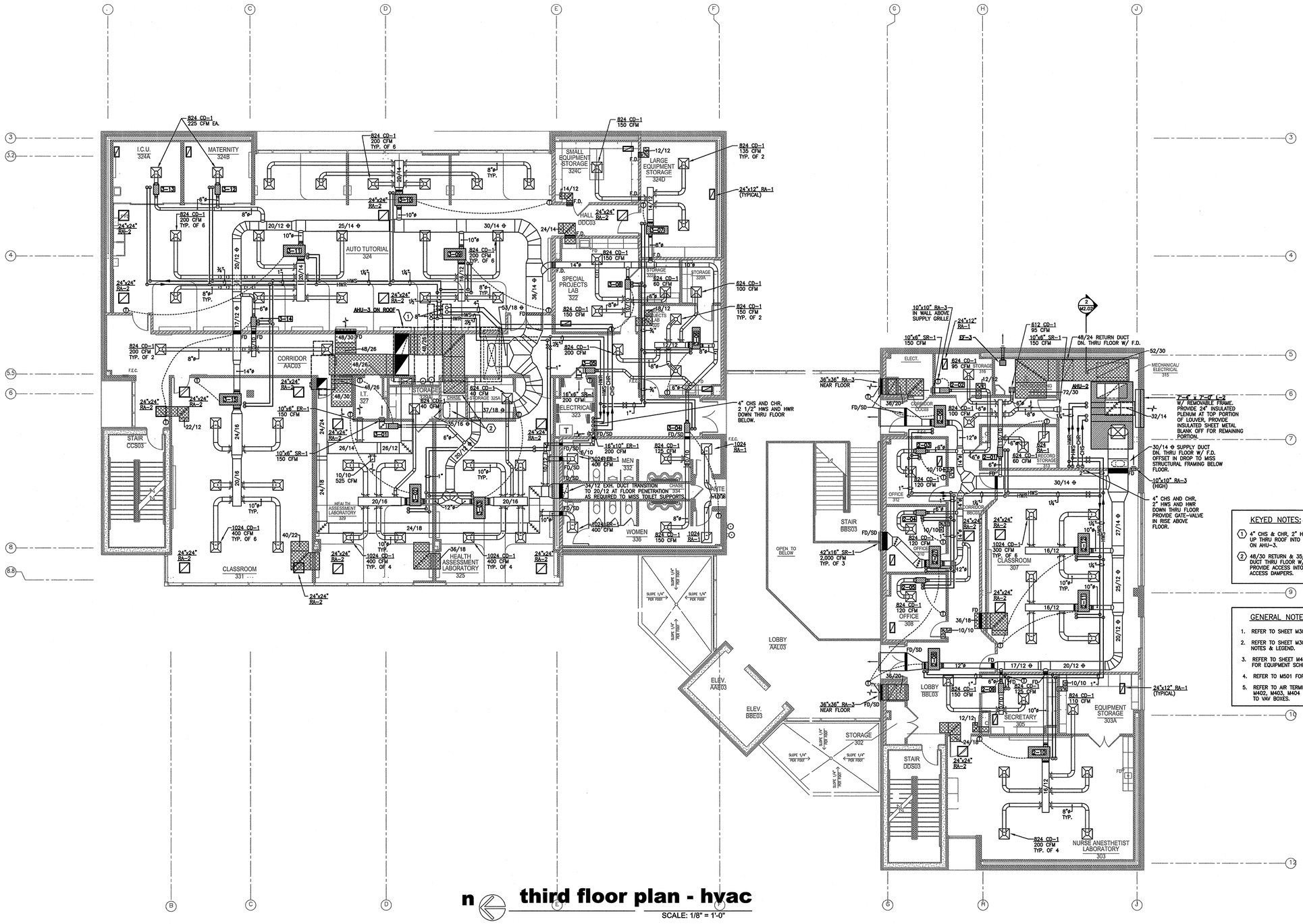

KEYED NOTES:

1. 4" CHS & CHR, 2" HWS & HWR UP THRU ROOF INTO PIPING CABINET ON AHU-3.
2. 48/30 RETURN & 35/16 ⊕ SUPPLY DUCT THRU FLOOR W/ FIRE DAMPER. PROVIDE ACCESS INTO CHASE TO ACCESS DAMPERS.

GENERAL NOTES:

1. REFER TO SHEET M301 FOR PIPING DETAILS.
2. REFER TO SHEET M302 FOR DETAILS, GENERAL NOTES & LEGEND.
3. REFER TO SHEET M401, M402, M403, M404 FOR EQUIPMENT SCHEDULES.
4. REFER TO M501 FOR CONTROL DRAWINGS.
5. REFER TO AIR TERMINAL SCHEDULES ON SHEETS M402, M403, M404 FOR RUNOUT PIPE SIZES TO VAV BOXES.

n **third floor plan - hvac**

SCALE: 1/8" = 1'-0"

ARKANSAS STATE UNIVERSITY

DONALD W. REYNOLDS CENTER FOR HEALTH SCIENCES

ARKANSAS STATE UNIVERSITY

JONESBORO, ARKANSAS

BRACKETT KRENNERICH architects

100 East Huntington, Suite D P.O. Box 1655 Jonesboro, Arkansas 72403-1655

870-932-0571 Fax 870-932-0875 www.bkarchits.com

Commission Number 12406

M103

Date: January 25, 2008

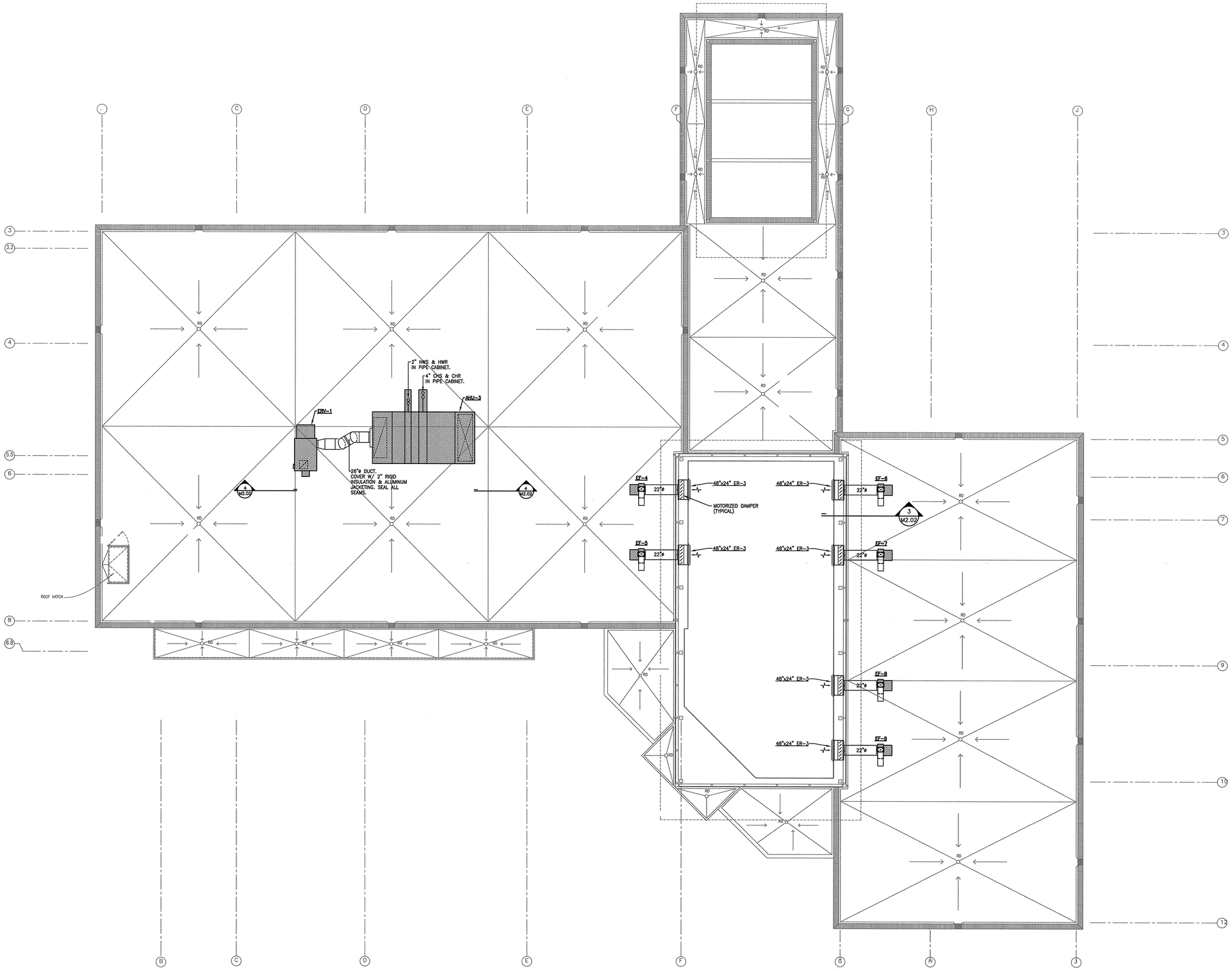

n

roof plan - hvac

SCALE: 1/8" = 1'-0"

ARKANSAS STATE UNIVERSITY

DONALD W. REYNOLDS CENTER FOR HEALTH SCIENCES

ARKANSAS STATE UNIVERSITY

JONESBORO, ARKANSAS

BRACKETT KRENNERICH architects

100 East Huntington, Suite D P.O. Box 1655 Jonesboro, Arkansas 72403-1655

870-932-0571 Fax 870-932-0975 www.bkarchits.com

Commission Number
12406

M104

Date: January 25, 2008

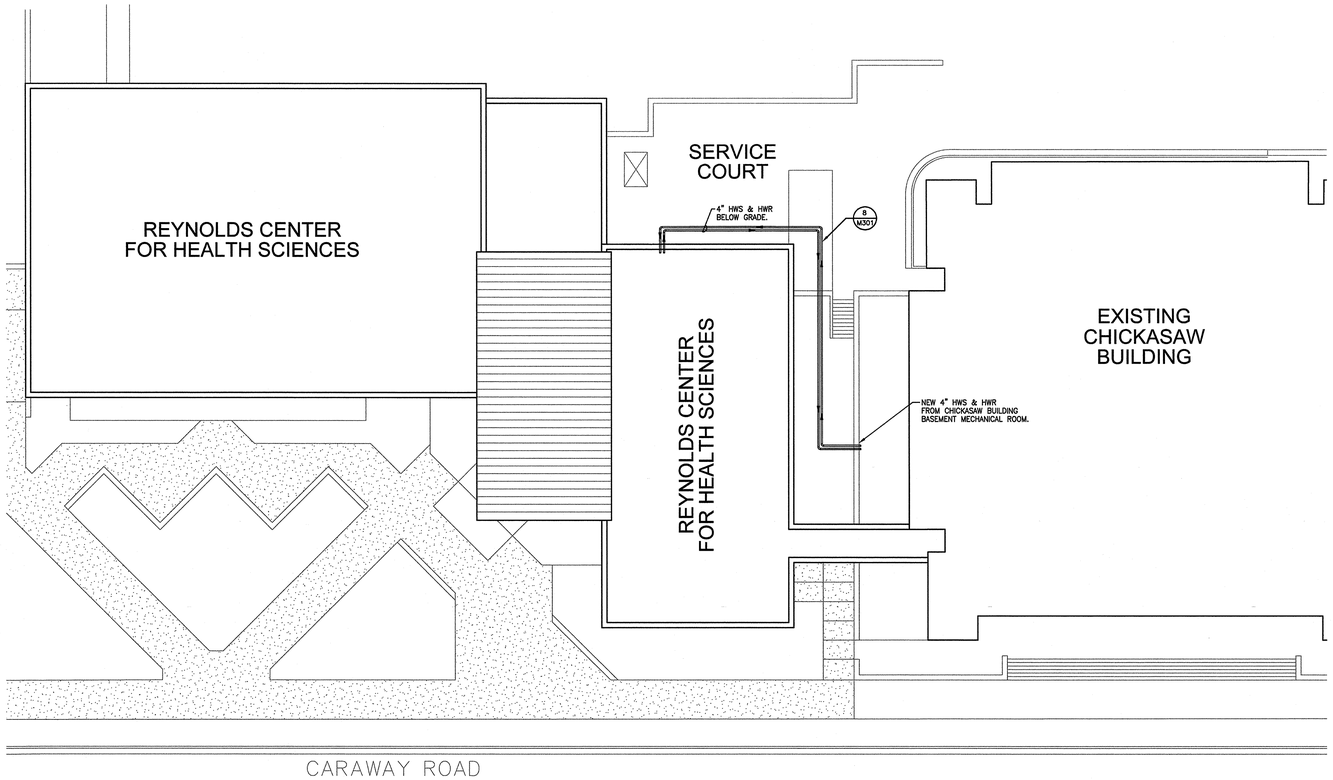

1 site plan - hvac

SCALE: 1/16" = 1'-0"

n

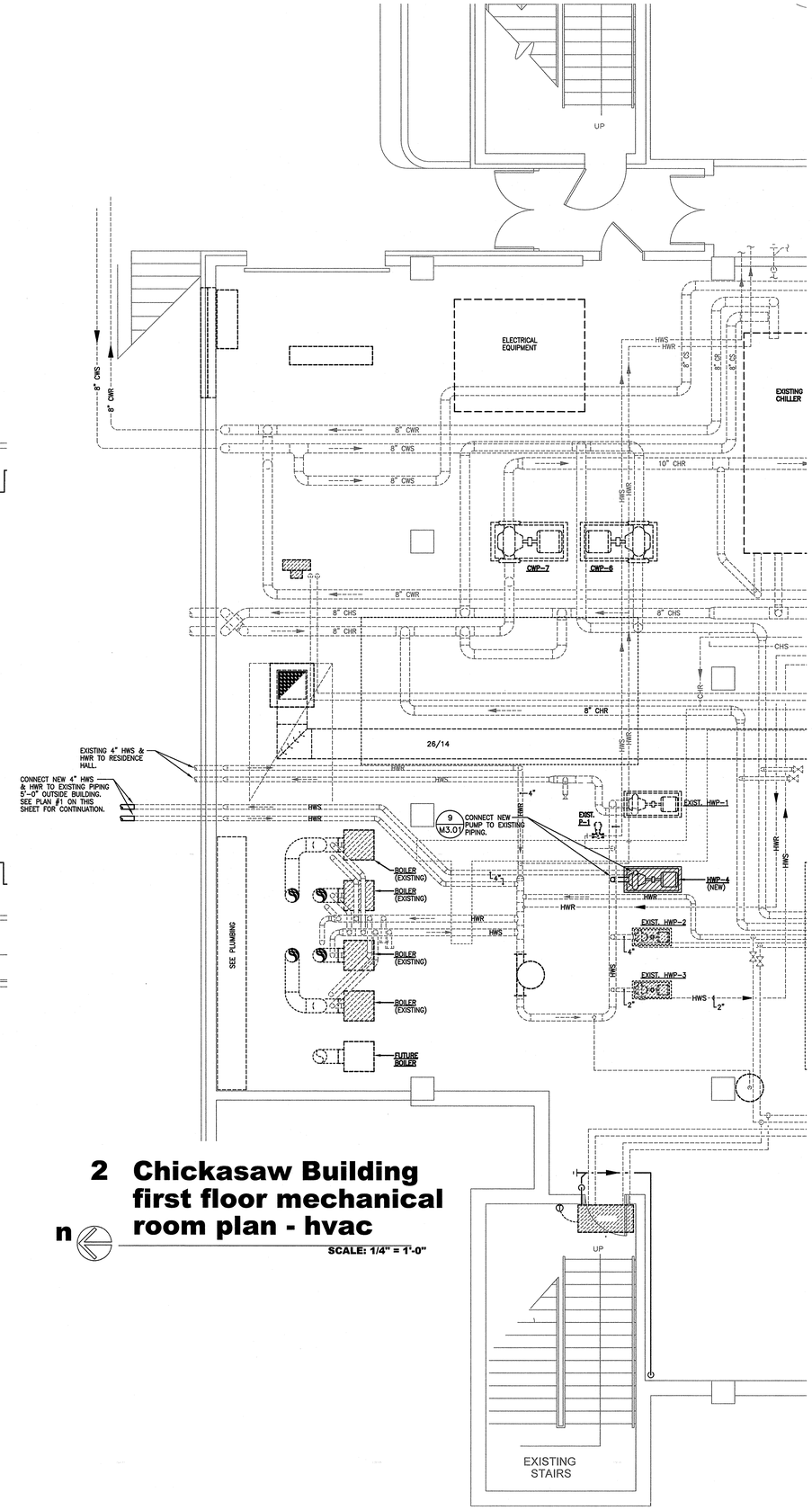

2 Chickasaw Building first floor mechanical room plan - hvac

n

SCALE: 1/4" = 1'-0"

ASU
ARKANSAS STATE
UNIVERSITY

DONALD W. REYNOLDS CENTER FOR HEALTH SCIENCES

ARKANSAS STATE UNIVERSITY

JONESBORO, ARKANSAS

BRACKETT
KRENNERICH
architects

100 East Huntington, Suite D P.O. Box 1655 Jonesboro, Arkansas 72403-1655

870-932-0571 Fax 870-932-0975 www.bkarchts.com

Commission Number
12406

M201

Date: January 25, 2008

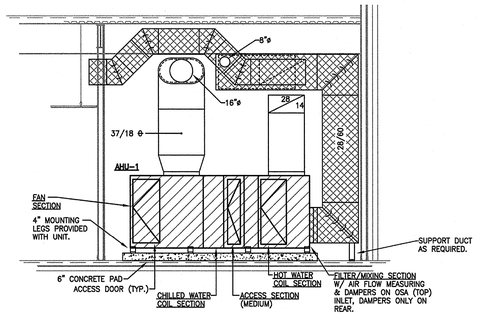

1 section
SCALE: 1/4" = 1'-0"

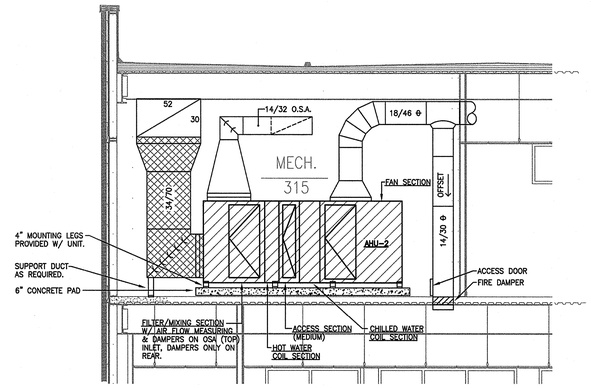

2 section
SCALE: 1/4" = 1'-0"

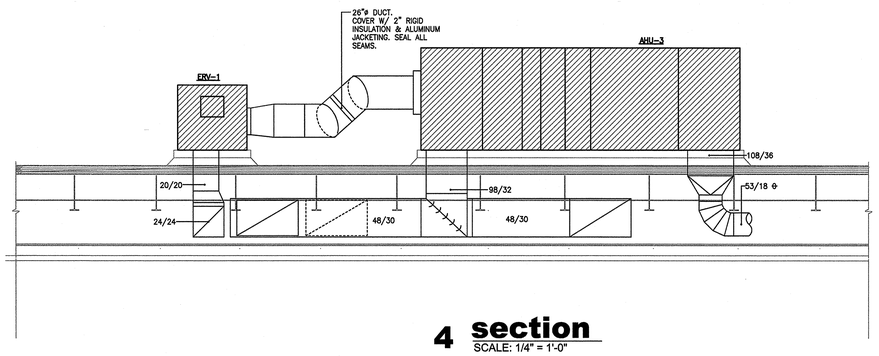

4 section
SCALE: 1/4" = 1'-0"

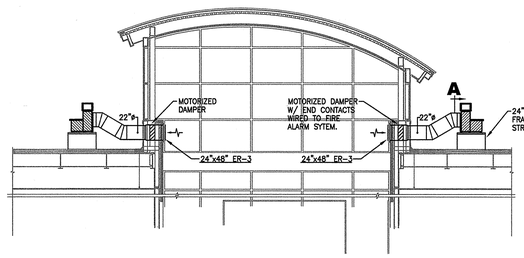

3 section
SCALE: 1/8" = 1'-0"

section A
SCALE: 1/8" = 1'-0"

ASU
ARKANSAS STATE UNIVERSITY

DONALD W. REYNOLDS CENTER FOR HEALTH SCIENCES

ARKANSAS STATE UNIVERSITY
JONESBORO, ARKANSAS

BRACKETT KRENNERICH architects
100 East Huntington, Suite D P.O. Box 1655 Jonesboro, Arkansas 72403-1655
870-932-0571 Fax 870-932-0975 www.bkarchts.com

Commission Number
12406

M202

Date: January 25, 2008

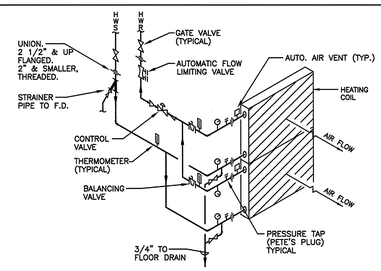

1 HOT WATER COIL PIPING DETAIL
N.T.S. (SPLIT-COIL CONNECTION)

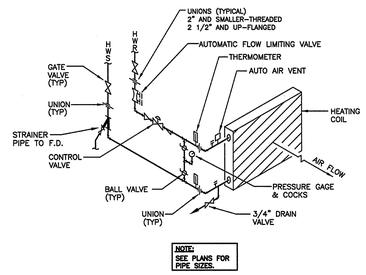

2 HOT WATER COIL PIPING DETAIL
N.T.S. (SINGLE COIL CONNECTION)

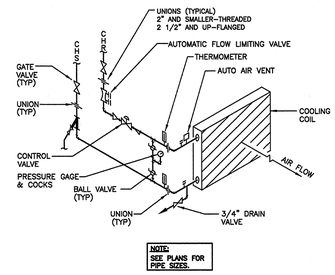

3 CHILLED WATER COIL PIPING DIAGRAM
N.T.S.

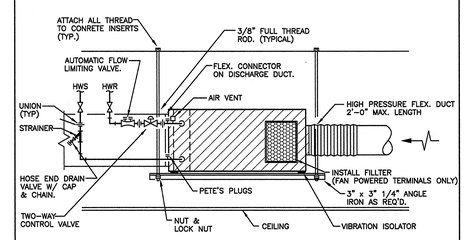

4 AIR TERMINAL PIPING AND MOUNTING DETAIL
N.T.S.

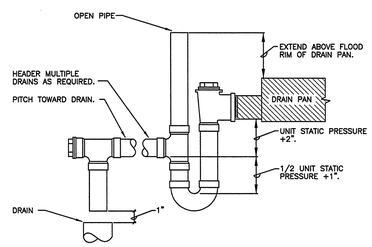

5 A.H.U. DRAIN PIPING
N.T.S.

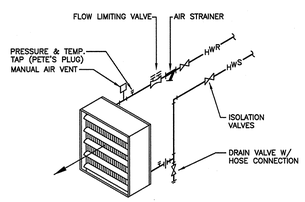

5 UNIT HEATER PIPING DIAGRAM
N.T.S. (CABINET HEATER PIPING TYPICAL)

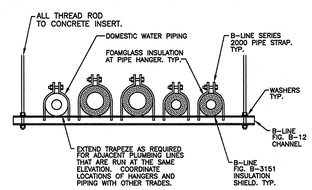

7 PIPE HANGER DETAIL
N.T.S.

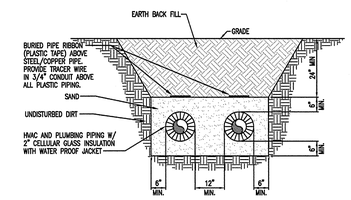

8 UNDERGROUND PIPING DETAIL
N.T.S.

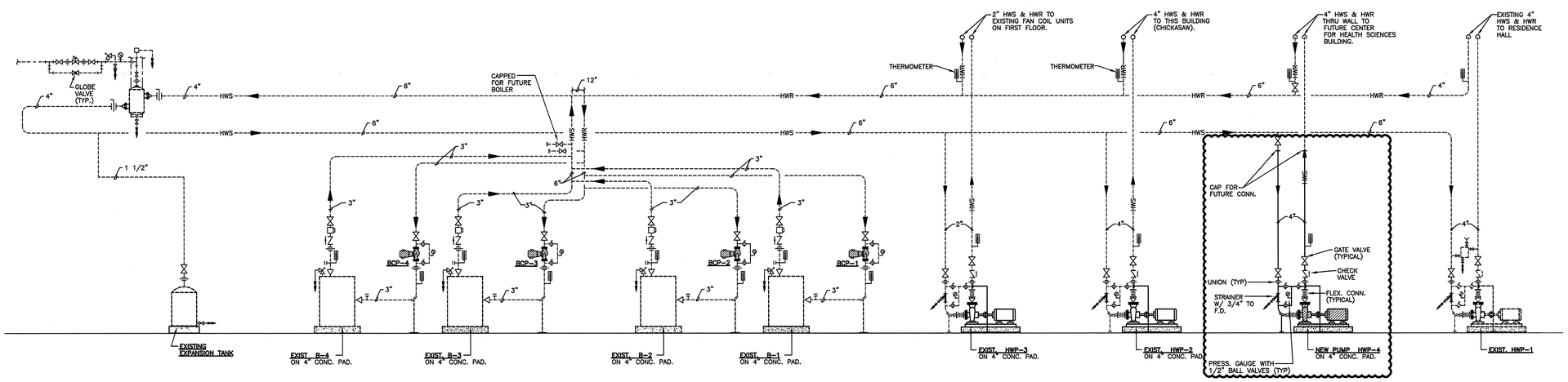

NOTE:
1. COORDINATE WITH TEMP. CONTROLS CONTRACTOR FOR TEMPERATURE WELL LOCATIONS.
2. VENT SYSTEM AS REQUIRED.

9 HEATING WATER SYSTEM PIPING DIAGRAM IN CHICKASAW BUILDING
N.T.S.

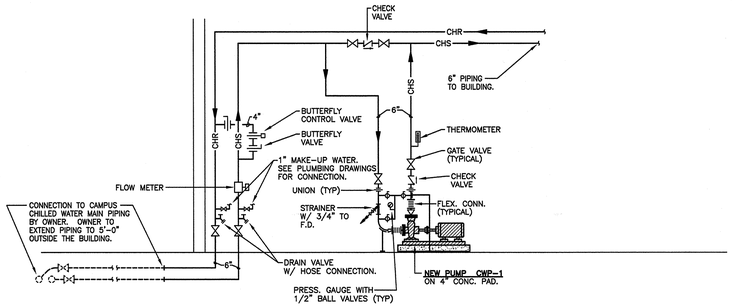

10 CHILLED WATER SYSTEM PIPING DIAGRAM
N.T.S.

ARKANSAS STATE UNIVERSITY

DONALD W. REYNOLDS CENTER FOR HEALTH SCIENCES

ARKANSAS STATE UNIVERSITY
JONESBORO, ARKANSAS

BRACKETT KRENNERICH architects
100 East Huntington, Suite D P.O. Box 1655 Jonesboro, Arkansas 72403-1655
870-932-0571 Fax 870-932-0975 www.bkarchts.com

Commission Number 12406

M301

Date: January 25, 2008

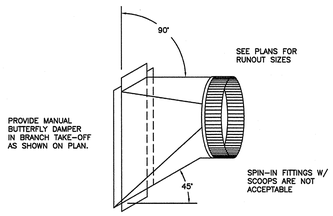

1 BRANCH DUCT TAP FITTING
N.T.S.

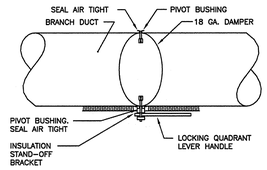

ABOVE ACCESSIBLE CEILINGS

2 MANUAL DAMPER OPERATOR DETAIL
N.T.S.

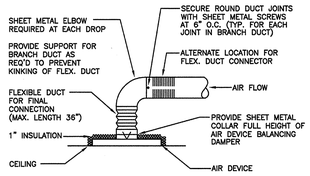

3 DIFFUSER CONNECTION DETAIL
N.T.S.

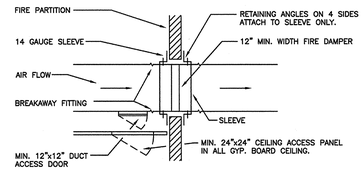

NOTE: SEE FIRE DAMPER MANUFACTURER'S INSTRUCTIONS FOR INSTALLATION

4 FIRE DAMPER DETAIL
N.T.S.

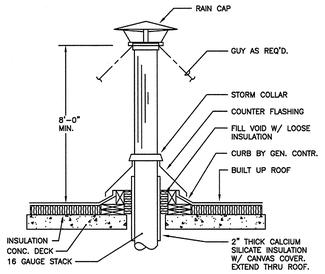

5 TYPICAL FLUE DETAIL
N.T.S.

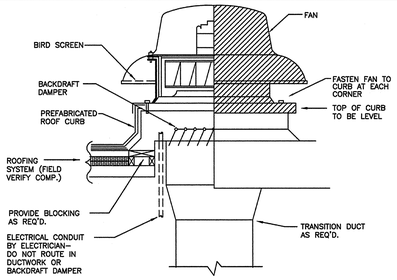

6 EXHAUST FAN DETAIL
N.T.S.

GENERAL NOTES

1. DUE TO THE SMALL SCALE OF THIS DRAWING, IT IS NOT POSSIBLE TO INDICATE ALL OFFSETS, FITTINGS, AND ACCESSORIES WHICH MAY BE REQUIRED. THE CONTRACTOR SHALL INVESTIGATE THE STRUCTURAL AND FINISH CONDITIONS AFFECTING THE WORK AND SHALL COORDINATE AND ARRANGE HIS WORK ACCORDINGLY.
2. THIS FACILITY IS LOCATED IN SEISMIC ZONE 1 AS DESCRIBED IN THE STANDARD BUILDING CODE. ALL PIPING, DUCTWORK, AND EQUIPMENT SHALL BE ISOLATED AND/OR RESTRAINED IN ACCORDANCE WITH THE REQUIREMENTS OF THIS ZONE.
3. DUCT SIZES INDICATED ON PLANS ARE ACTUAL SHEET METAL SIZES AND DO ALLOW FOR INTERNAL INSULATION OF RECTANGULAR DUCT, IF APPLICABLE.
4. ROUND BRANCH DUCT RUNOUTS SHALL BE SAME SIZE AS DIFFUSER THROAT UNLESS OTHERWISE NOTED.
5. MOUNT ALL THERMOSTATS AT 54" ABOVE FINISHED FLOOR.
6. FLEXIBLE DUCT MAY BE USED FOR FINAL CONNECTIONS TO DIFFUSERS. A MAXIMUM LENGTH OF THREE FEET (3') SHALL BE USED.
7. ALL CEILING-MOUNTED SUPPLY DIFFUSERS SHALL HAVE FOUR-WAY (4-WAY) PATTERN UNLESS OTHERWISE INDICATED.
8. WHERE SPLITTER DAMPERS ARE LOCATED ABOVE NON-ACCESSIBLE CEILINGS, PROVIDE EXTENDED CONTROL ROD AND REGULATOR AS SPECIFIED.
9. WHERE MANUAL DAMPERS ARE INSTALLED IN EXTERNALLY INSULATED DUCTWORK, PROVIDE STAND-OFF BRACKET TO PREVENT COMPRESSION OF INSULATION BY DAMPER OPERATOR HANDLE.
10. PROVIDE TURNING VANES IN ALL 90-DEGREE ELBOWS.
11. PROVIDE SLEEVES THROUGH WALLS AND FLOORS. SEAL EXCESS OPENING WITH WATER-PROOF SEALANT. COORDINATE LOCATIONS AND SIZES OF SLEEVES WITH GENERAL CONTRACTOR. SLEEVES SHALL PROVIDE A MAXIMUM OF 1" CLEARANCE BETWEEN DUCT OR PIPE AND SLEEVE. SEAL PENETRATION IN FIRE/SMOKE RATED WALLS AND FLOOR WITH AN APPROVED FIRE/SMOKE BLOCK SEALANT.
12. EXTERNALLY INSULATE SUPPLY, RETURN, AND OUTSIDE AIR DUCTWORK UNLESS NOTED OTHERWISE.
13. EXHAUST DUCTWORK SHALL BE UN-INSULATED, UNLESS NOTED OTHERWISE.
14. EXTERNALLY INSULATE LOW-VELOCITY ROUND RUNOUT DUCTWORK.
15. EXTERNALLY INSULATE HIGH-VELOCITY, SINGLE-WALL ROUND AND OVAL DUCTWORK.
16. INSULATE THE TOP OF ALL SUPPLY AIR DIFFUSERS WITH A MINIMUM OF 1/2" THICK FIBERGLASS DUCT WRAP.
17. INSULATE ALL PIPING, DUCTS, AND EQUIPMENT, WHETHER INDICATED OR NOT, WHICH ARE SUBJECT TO FREEZING OR CONDENSATION FORMATION.
18. RUN COOLING COIL CONDENSATE DRAINS FULL SIZE TO NEAREST FLOOR OR ROOF DRAIN.
19. ARRANGE PIPING TO ALLOW FOR PROPER SERVICE & ACCESS TO EQUIPMENT. INSTALL UNIONS AND ISOLATION VALVES TO ALLOW FOR REMOVAL OF EQUIPMENT WITHOUT DISTURBING MAINS.
20. PROVIDE ADDITIONAL DRAIN VALVES AND AIR VENTS AS REQUIRED TO PROPERLY DRAIN AND VENT ENTIRE PIPING SYSTEM.
21. PROVIDE WELLS FOR TEMPERATURE SENSORS FURNISHED WITH EQUIPMENT OR AS REQUIRED FOR TEMPERATURE CONTROL SYSTEM. COORDINATE REQUIREMENTS WITH CONTROLS CONTRACTOR.
22. PROVIDE REDUCERS AS REQUIRED. VERIFY SIZES WITH APPROVED EQUIPMENT SHOP DRAWINGS.
23. INSTALL PIPE GUIDES ON ALL PIPING WITH EXPANSION JOINTS AT DISTANCE RECOMMENDED BY EXPANSION JOINT MANUFACTURER.
24. REFER TO PLUMBING PLANS FOR LOCATION OF DRAINS.
25. REFER TO ARCHITECTURAL PLANS FOR LOCATIONS OF FIRE AND SMOKE RATED PARTITIONS.
26. COORDINATE LOCATION OF DUCTS AND DIFFUSERS WITH STRUCTURAL FRAMING MEMBERS. OFFSET DUCTS AS REQUIRED TO CLEAR STRUCTURAL MEMBERS.
27. COORDINATE LOCATIONS AND ELEVATION OF DUCT RUNS WITH PLUMBING, SPRINKLER, AND ELECTRICAL CONTRACTORS.
28. COORDINATE EQUIPMENT ELECTRICAL REQUIREMENTS WITH ELECTRICAL CONTRACTOR.
29. COORDINATE MAKE-UP WATER AND GAS REQUIREMENTS WITH PLUMBING CONTRACTOR.
30. PROVIDE ACCESS DOORS IN DUCTWORK FOR EACH FIRE DAMPER, FIRE/SMOKE DAMPER AND SMOKE DAMPER.

LEGEND

- CEILING DIFFUSER
- RETURN AIR GRILLE (RA)
- EXHAUST REGISTER (ER)
- 624 CD-1 / 100 CFM — SIZE - DESIGNATION / CUBIC FEET PER MINUTE
- FLEXIBLE DUCT CONNECTOR
- TURNING VANES
- SPLITTER DAMPER (TEE)
- DUAL WALL DUCT (1")
- CROSSHATCH INDICATES INTERNALLY LINED DUCTWORK.
- EXTRACTOR
- MANUAL DAMPER
- F.D. — FIRE DAMPER AND ACCESS DOOR (SMOKE DAMPER S.D. SIMILAR)
- DIAMETER
- DENOTES OVAL DUCT
- T — THERMOSTAT
- 1 / M-1 — DETAIL
- 2 / M-2 — SECTION

TOP NUMBER REFERS TO THE DETAIL NUMBER. BOTTOM NUMBER REFERS TO THE SHEET WHERE DETAIL IS SHOWN

ARKANSAS STATE UNIVERSITY

DONALD W. REYNOLDS
CENTER FOR HEALTH SCIENCES
ARKANSAS STATE UNIVERSITY
JONESBORO, ARKANSAS

BRACKETT KRENNERICH architects
100 East Huntington, Suite D P.O. Box 1655 Jonesboro, Arkansas 72403-1655
870-932-0571 Fax 870-932-0975 www.bkarchts.com

Commission Number 12406

M302

Date: January 25, 2008

AIR HANDLING UNIT SCHEDULE

DESIG.	MFR/MDL.	AREA SERVED	LOCAT.	TYPE	OSA		FAN DATA				CHILLED WATER COIL										HEATING WATER COIL								MOTOR DATA			REMARKS
					MIN	MAX	CFM	ESP/TSP	TYPE	DIA.	EAT	LAT	MBH TOTAL	MBH SENS.	EWT	LWT	GPM	W.P.D.	ROW/FIN	FACE VELOCITY	APD	EAT/LAT	EWT/LWT	GPM	W.P.D.	MBH	ROW/FIN	FACE VELOCITY	APD	BHP	HP	VOLT/PH	
AHU-1	TRANE / MCC SIZE 25	FIRST FLOOR	FIRST FLOOR MECH. ROOM	MODULAR CLIMATE CHANGER	1,200	2,400	12,000	3.00"/4.89"	F.C.	22.38"	82.0° d.b. 67.9° w.b.	53.5° d.b. 53.3° w.b.	538.88	377.13	45° F	55° F	107.4	4.83'	8R/109 FPF	492 FPM	0.92'	42°/60.0°	180°/138.2°	11.2	0.49'	234.25	1R/102 FPF	529 FPM	.10"	14.8	15	460/3ø	SEE UNIT ELEVATION FOR UNIT DETAILS. PROVIDE 4" 65% FILTERS. VARIABLE VOLUME UNIT WITH FACTORY MOUNTED V.F.D. (SEE SPECIFICATIONS FOR ALL OPTIONS)
AHU-2	TRANE / MCC SIZE 35	SOUTH SECOND FLOOR & THIRD FLOOR	THIRD FLOOR MECH. ROOM	MODULAR CLIMATE CHANGER	1,600	3,200	16,000	3.00"/4.69"	F.C.	25.00"	82.0° d.b. 67.9° w.b.	53.5° d.b. 53.3° w.b.	723.14	502.84	45° F	55° F	144.13	8.26'	8R/92 FPF	469 FPM	0.79'	42°/58°	180°/142.7°	14.9	0.14'	277.75	1R/94 FPF	531 FPM	.09"	21.2	25	460/3ø	SEE UNIT ELEVATION FOR UNIT DETAILS. PROVIDE 4" 65% FILTERS. VARIABLE VOLUME UNIT WITH FACTORY MOUNTED V.F.D. (SEE SPECIFICATIONS FOR ALL OPTIONS)
AHU-3	TRANE / MCC SIZE 50	NORTH SECOND FLOOR & THIRD FLOOR	ROOF	MODULAR CLIMATE CHANGER	3,000	5,300	22,000	3.0"/4.85"	A.F.	25.00"	76.35° d.b. 64.5° w.b.	53.0° d.b. 52.5° w.b.	773.08	565.31	45° F	55° F	154.08	4.05'	6R/108 FPF	461 FPM	0.58'	67°/90°	180°/150°	35.9	1.28'	539.77	1R/80 FPF	461 FPM	.06"	24.5	25	460/3ø	SEE UNIT ELEVATION FOR UNIT DETAILS. OUTDOOR UNIT. PROVIDE 4" 65% FILTERS. VARIABLE VOLUME UNIT WITH FACTORY MOUNTED V.F.D. (SEE SPECIFICATIONS FOR ALL OPTIONS)

ENERGY RECOVERY VENTILATOR SCHEDULE

DESIG.	MFR/MDL.	AREA SERVED	TYPE	OSA		SUPPLY FAN DATA				EXHAUST FAN DATA				COOLING PERFORMANCE (OUTDOOR AIR)				COOLING PERFORMANCE (EXHAUST AIR)				HEATING PERFORMANCE (OUTDOOR AIR)			
				MIN	MAX	CFM	ESP/TSP	BHP	HP	CFM	ESP/TSP	BHP	HP	UNIT EAT	UNIT LAT	ENTERING HUMIDITY	LEAVING HUMIDITY	UNIT EAT	UNIT LAT	ENTERING HUMIDITY	LEAVING HUMIDITY	UNIT EAT	UNIT LAT	ENTERING HUMIDITY	LEAVING HUMIDITY
ERV-1	SEMCO / FVI-5000	AHU-3 O.S.A. BLDG. EXHAUST	O.S.A. / EXHAUST UNIT W/ HEAT WHEEL & SUPPLY V.F.D.	3,000	5,300	5,300	0.1"/ --"	3.50	5	5,000	0.3"/--	3.08	5	92° d.b. 79.9° w.b.	80.6° d.b. 69.0° w.b.	136.0 gr	80.0 gr	75° d.b. 62.5° w.b.	87.0° d.b. 75.3° w.b.	65.7 g.r.	115.5 g.r.	15° d.b. 11.7° w.b.	53.1° d.b. 42.9° w.b.	5.0 g.r.	25.3 g.r.

ENERGY RECOVERY VENTILATOR SCHEDULE (CONTINUATION)

HEATING PERFORMANCE (EXHAUST AIR)				E.R.V. ELECTRICAL DATA				REMARKS
UNIT EAT	UNIT LAT	ENTERING HUMIDITY	LEAVING HUMIDITY	FLA	MCA	VOLT/PH	MOCP	
72° d.b. 54.3° w.b.	31.6° d.b. 26.9° w.b.	35.4 gr	13.9 gr	--	17.6	460 / 3ø	25	VARIABLE VOLUME SUPPLY CONSTANT VOLUME EXHAUST. PROVIDE V.F.D. FACTORY MOUNTED INSIDE UNIT. PROVIDE ROOF CURB. UNIT HAS BOTTOM EXHAUST INTAKE, SIDE SUPPLY AIR OUT.

EXHAUST FAN SCHEDULE

DESIG.	MFR/MDL.	SERVES	LOCAT.	TYPE	FAN DATA							MOTOR DATA				REMARKS
					CFM	S.P.	RPM	DRIVE	TYPE	DIA.	SONES	RPM	BHP	HP	VOLT/PH	
EF-1,2,3	COOK / GEMINI GC-144	TOILET 179, HOUSEKEEPING 213 & 318	CEILING	CLG. MNTD.	100	.30"	952	DIRECT	CENT.	--	2.1	1,400	76.2 W	--	120V / 1ø	PROVIDE FAN SPEED CONTROLLER, CEILING GRILLE, DISCONNECT, WALL CAP.
EF-4 THRU EF-9	COOK / CA SWSI 180CA-SWSI	SMOKE PURGE	ROOF	AIRFOIL CENTRIFUGAL BLOWER	6,675	.375"	1,980	BELT	CENT.	--	--	1,725	1.78	3	460V/3ø	U.L. LISTED FOR SMOKE CONTROL SYSTEMS. PROVIDE HIGH TEMP. PAINT, HEAT SHIELD, SHAFT COOLER, WEATHER COVER, DRAIN, SPRING ISOLATOR MOUNTS. TOP ANGULAR UP CONFIG.

PUMP SCHEDULE

DESIG.	MFR/MDL.	SERVES	LOCAT.	TYPE	GPM	HEAD	EFF.	MOTOR DATA				REMARKS
								BHP	HP	RPM	VOLT/PH	
HWP-4	ARMSTRONG / SERIES 4030 3x2.5x8	HEATING WATER PUMP	MECH. RM. CHICKASAW BUILDING	END SUCTION	200	60'	75.1%	4.03	7.5	1,750	460 / 3ø	VARIABLE VOLUME PUMP WITH INVERTOR DUTY MOTOR.
CWP-1	ARMSTRONG / SERIES 4030 5x4x8	CHILLED WATER PUMP	MECH. RM. 182	END SUCTION	420	45'	77.4%	6.16	7.5	1,750	460 / 3ø	VARIABLE VOLUME PUMP WITH INVERTOR DUTY MOTOR.

AIR DEVICE SCHEDULE

DESIG.	MFR./MDL.	TYPE	FACE SIZE	FINISH	FREE AREA	ACCESS.	REMARKS
CD-1	METAL AIRE / 5800	LOUVER FACE CEILING SUPPLY	AS NOTED	WHITE	---	VOLUME CONTROL	2'x2' GRILLE WITH ROUND NECK
CD-2	METAL AIRE / 7573	PERFORATED FACE CEILING SUPPLY	AS NOTED	WHITE	51%	VOLUME CONTROL	
SR-1	METAL AIRE / V4004	DBL. DEFLECTION SIDEWALL SUPPLY	AS NOTED	WHITE	---	VOLUME CONTROL	
RA-1	METAL AIRE / 7500R	PERF. FACE CEILING RETURN	AS NOTED	WHITE	51%	----	
RA-2	METAL AIRE / CCF	CUBE CORE CEILING RETURN	AS NOTED	WHITE	----	----	PROVIDE W/ 1/2" GRID.
RA-3	METAL AIRE / RHE	HORIZONTAL FIXED BLADE SIDEWALL RETURN	AS NOTED	WHITE	---	----	FIXED HORIZ. BARS ON .666" CENTERS W/ 45° FACE DEFLECTION
ER-1	METAL AIRE / 7500R	PERF. FACE CEILING EXHAUST	AS NOTED	WHITE	51%	VOLUME CONTROL	
ER-2	METAL AIRE / RHD	HORIZONTAL FIXED BLADE SIDEWALL EXHAUST	AS NOTED	WHITE	---	VOLUME CONTROL	FIXED HORIZ. BARS ON .666" CENTERS W/ 45° FACE DEFLECTION

LOUVER SCHEDULE

DESIG.	MFR/MDL.	TYPE	SERVES	CFM	S.P.	SIZE	VELOCITY FPM	FINISH	REMARKS
L-1	AMERICAN WRMNG. & VENT./ LE-31	6" DEEP 35° FIXED DRAINABLE	AHU-1 O.S.A. INTAKE	2,400	.06"	36"W x30"H	646	KYNAR	PROVIDE WITH BIRD SCREEN. COLOR/FINISH BY ARCHITECT.
L-2	AMERICAN WRMNG. & VENT./ LE-31	6" DEEP 35° FIXED DRAINABLE	AHU-2 O.S.A. INTAKE / UNIT REMOVAL.	3,200	--	88"W x84"H	--	KYNAR	PROVIDE WITH BIRD SCREEN. PROVIDE WITH REMOVABLE FRAME. COLOR/FINISH BY ARCHITECT.

UNIT HEATER SCHEDULE

DESIG.	MFR/MDL.	SERVES	TYPE	CFM	GPM	EWT/LWT	MBH	EAT/LAT	MOTOR DATA			REMARKS
									HP	VOLT	PHASE	
UH-1	TRANE / 38-S	MECHANICAL ROOM	HYDRONIC	543	2.46	180°/165°	17.9	60°/90.3°	1/20	120	1ø	PROVIDE THERMOSTAT

CABINET HEATER SCHEDULE

DESIG.	MFR/MDL.	SERVES	LOCAT.	TYPE	CFM	MBH	EWT/LWT	EAT/LAT	GPM	WATER P.D.	MOTOR DATA				REMARKS
											MCA	MOCP	VOLT	PHASE	
CH-1 & 2	TRANE / FFDB03	STAIRS	1ST FLOOR	HORIZONTAL CABINET	262	18.19	180°/143.6°	60°/125.9°	1	4.91'	.87	15	120	1ø	SEE SPECIFICATIONS.

ARKANSAS STATE UNIVERSITY

DONALD W. REYNOLDS CENTER FOR HEALTH SCIENCES
ARKANSAS STATE UNIVERSITY
JONESBORO, ARKANSAS

BRACKETT KRENNERICH architects
100 East Huntington, Suite D P.O. Box 1655 Jonesboro, Arkansas 72403-1655
870-932-0571 Fax 870-932-0975 www.bkarchits.com

Commission Number 12406

M401

Date: January 25, 2008

AIR TERMINAL SCHEDULE (AHU-1)

DESIG.	MFR/MDL	TYPE	PRIMARY CFM		UNIT A.P.D.	INLET SIZE	OUTLET SIZE	FAN DATA						HEATING WATER COIL DATA										REMARKS
			MIN.	MAX.				CFM	ESP	HP	FLA	MOCP	VOLT/PH	CFM	APD	MBH	EWT/LWT	EAT/LAT	GPM	WPD	ROW/FIN	PIPE SIZE	
1-01	METALAIRE / TH-500	SINGLE DUCT VARIABLE VOLUME	100	150	.04"	6"ø	12"W x 8"H	--	--	--	--	--	277 / 1ø	100	0.02"	4.52	180°/149.1°	55°/95.9°	0.3	0.05'	1R/12 FPI	1/2"	UNIT PROVIDED WITH 1/2" FOIL FACED INSULATION, DISCHARGE HOT WATER COIL, TRANSFORMER & DISCONNECT. (SEE SPECS.)
1-02	METALAIRE / TH-500	SINGLE DUCT VARIABLE VOLUME	100	100	.02"	6"ø	12"W x 8"H	--	--	--	--	--	277 / 1ø	100	0.01"	4.52	180°/149.1°	55°/95.9°	0.3	0.03'	1R/12 FPI	1/2"	UNIT PROVIDED WITH 1/2" FOIL FACED INSULATION, DISCHARGE HOT WATER COIL, TRANSFORMER & DISCONNECT. (SEE SPECS.)
1-03	METALAIRE / TH-500	SINGLE DUCT VARIABLE VOLUME	100	150	.04"	6"ø	12"W x 8"H	--	--	--	--	--	277 / 1ø	100	0.02"	4.52	180°/149.1°	55°/95.9°	0.3	0.05'	1R/12 FPI	1/2"	UNIT PROVIDED WITH 1/2" FOIL FACED INSULATION, DISCHARGE HOT WATER COIL, TRANSFORMER & DISCONNECT. (SEE SPECS.)
1-04	METALAIRE / FVI-C2508-C	PARALLEL FAN POWERED VARIABLE VOL.	200	650	.18"	8"ø	16"W x 15"H	450	.26"	1/4	1.9	--	277 / 1ø	650	0.11"	34.6	180°/144.6°	68.5°/117.9°	2.0	0.30'	2R/12 FPI	3/4"	UNIT PROVIDED WITH 1/2" FOIL FACED INSULATION, SINGLE SPEED MOTOR W/ SCR, DISCHARGE HOT WATER COIL, TRANSFORMER & DISCONNECT. (SEE SPECS.)
1-05	METALAIRE / TH-500	SINGLE DUCT VARIABLE VOLUME	0	300	.06"	6"ø	12"W x 8"H	--	--	--	--	--	277 / 1ø		--	--	--	--	--	--	--	--	UNIT PROVIDED WITH 1/2" FOIL FACED INSULATION, TRANSFORMER & DISCONNECT. (SEE SPECS.)
1-06	METALAIRE / TH-500	SINGLE DUCT VARIABLE VOLUME	100	150	.04"	6"ø	12"W x 8"H	--	--	--	--	--	277 / 1ø	100	0.02"	4.52	180°/149.1°	55°/95.9°	0.3	0.05'	1R/12 FPI	1/2"	UNIT PROVIDED WITH 1/2" FOIL FACED INSULATION, DISCHARGE HOT WATER COIL, TRANSFORMER & DISCONNECT. (SEE SPECS.)
1-07	METALAIRE / FVI-C2508-C	PARALLEL FAN POWERED VARIABLE VOL.	350	650	.21"	8"ø	16"W x 15"H	250	.30"	1/6	1.2	--	277 / 1ø	600	0.10"	28.06	180°/141.8°	63.3°/106.3°	1.5	0.14'	2 R/12 FPI	3/4"	UNIT PROVIDED WITH 1/2" FOIL FACED INSULATION, SINGLE SPEED MOTOR W/ SCR, DISCHARGE HOT WATER COIL, TRANSFORMER & DISCONNECT. (SEE SPECS.)
1-08	METALAIRE / TH-500	SINGLE DUCT VARIABLE VOLUME	0	75	.01"	6"ø	12"W x 8"H	--	--	--	--	--	277 / 1ø	--	--	--	--	--	--	--	--	--	UNIT PROVIDED WITH 1/2" FOIL FACED INSULATION, TRANSFORMER & DISCONNECT. (SEE SPECS.)
1-09	METALAIRE / FVI-C2508-C	PARALLEL FAN POWERED VARIABLE VOL.	350	650	.21"	8"ø	16"W x 15"H	250	.30"	1/6	1.2	--	277 / 1ø	600	0.10"	28.06	180°/141.8°	63.3°/106.3°	1.5	0.14'	2 R/12 FPI	3/4"	UNIT PROVIDED WITH 1/2" FOIL FACED INSULATION, SINGLE SPEED MOTOR W/ SCR, DISCHARGE HOT WATER COIL, TRANSFORMER & DISCONNECT. (SEE SPECS.)
1-10	METALAIRE / FVI-C2508-C	PARALLEL FAN POWERED VARIABLE VOL.	350	650	.21"	8"ø	16"W x 15"H	250	.30"	1/6	1.2	--	277 / 1ø	600	0.10"	28.06	180°/141.8°	63.3°/106.3°	1.5	0.14'	2 R/12 FPI	3/4"	UNIT PROVIDED WITH 1/2" FOIL FACED INSULATION, SINGLE SPEED MOTOR W/ SCR, DISCHARGE HOT WATER COIL, TRANSFORMER & DISCONNECT. (SEE SPECS.)
1-11	METALAIRE / TH-500	SINGLE DUCT VARIABLE VOLUME	0	300	.06"	6"ø	12"W x 8"H	--	--	--	--	--	277 / 1ø		--	--	--	--	--	--	--	--	UNIT PROVIDED WITH 1/2" FOIL FACED INSULATION, DISCHARGE HOT WATER COIL, TRANSFORMER & DISCONNECT. (SEE SPECS.)
1-12	METALAIRE / TH-500	SINGLE DUCT VARIABLE VOLUME	325	650	.46"	8"ø	12"W x 10"H	--	--	--	--	--	277 / 1ø	600	0.37"	26.63	180°/152.7°	55°/95.2°	2.0	0.65'	2R/12 FPI	3/4"	UNIT PROVIDED WITH 1/2" FOIL FACED INSULATION, DISCHARGE HOT WATER COIL, TRANSFORMER & DISCONNECT. (SEE SPECS.)
1-13	METALAIRE / FVI-C2506-C	PARALLEL FAN POWERED VARIABLE VOL.	0	300	.10"	6"ø	16"W x 15"H	300	.21"	1/6	1.2	--	277 / 1ø	300	0.01"	11.09	180°/157.3°	63.3°/113.0°	1.0	0.14'	1 R/12 FPI	1/2"	UNIT PROVIDED WITH 1/2" FOIL FACED INSULATION, SINGLE SPEED MOTOR W/ SCR, DISCHARGE HOT WATER COIL, TRANSFORMER & DISCONNECT. (SEE SPECS.)
1-14	METALAIRE / TH-500	SINGLE DUCT VARIABLE VOLUME	320	320	.25"	6"ø	12"W x 8"H	--	--	--	--	--	277 / 1ø	320	0.18"	15.05	180°/149.2°	55°/97.6°	1.0	0.13'	2R/12 FPI	1/2"	UNIT PROVIDED WITH 1/2" FOIL FACED INSULATION, DISCHARGE HOT WATER COIL, TRANSFORMER & DISCONNECT. (SEE SPECS.)
1-15	METALAIRE / TH-500	SINGLE DUCT VARIABLE VOLUME	150	150	.04"	6"ø	12"W x 8"H	--	--	--	--	--	277 / 1ø	150	0.02"	6.10	180°/155.0°	55°/91.8°	0.5	0.13'	1R/12 FPI	1/2"	UNIT PROVIDED WITH 1/2" FOIL FACED INSULATION, DISCHARGE HOT WATER COIL, TRANSFORMER & DISCONNECT. (SEE SPECS.)
1-16	METALAIRE / TH-500	SINGLE DUCT VARIABLE VOLUME	100	100	.02"	6"ø	12"W x 8"H	--	--	--	--	--	277 / 1ø	100	0.01"	4.52	180°/149.1°	55°/95.9°	0.3	0.03'	1R/12 FPI	1/2"	UNIT PROVIDED WITH 1/2" FOIL FACED INSULATION, DISCHARGE HOT WATER COIL, TRANSFORMER & DISCONNECT. (SEE SPECS.)
1-17	METALAIRE / TH-500	SINGLE DUCT VARIABLE VOLUME	120	120	.03"	6"ø	12"W x 8"H	--	--	--	--	--	277 / 1ø	120	0.02"	5.53	180°/157.3°	55°/96.8°	0.5	0.13'	1R/12 FPI	1/2"	UNIT PROVIDED WITH 1/2" FOIL FACED INSULATION, DISCHARGE HOT WATER COIL, TRANSFORMER & DISCONNECT. (SEE SPECS.)
1-18	METALAIRE / TH-500	SINGLE DUCT VARIABLE VOLUME	150	230	.08"	6"ø	12"W x 8"H	--	--	--	--	--	277 / 1ø	150	0.02"	6.10	180°/155.0°	55°/91.8°	0.5	0.13'	1R/12 FPI	1/2"	UNIT PROVIDED WITH 1/2" FOIL FACED INSULATION, DISCHARGE HOT WATER COIL, TRANSFORMER & DISCONNECT. (SEE SPECS.)
1-19	METALAIRE / TH-500	SINGLE DUCT VARIABLE VOLUME	120	120	.03"	6"ø	12"W x 8"H	--	--	--	--	--	277 / 1ø	120	0.02"	5.53	180°/157.3°	55°/96.8°	0.5	0.13'	1R/12 FPI	1/2"	UNIT PROVIDED WITH 1/2" FOIL FACED INSULATION, DISCHARGE HOT WATER COIL, TRANSFORMER & DISCONNECT. (SEE SPECS.)
1-20	METALAIRE / TH-500	SINGLE DUCT VARIABLE VOLUME	150	300	.13"	6"ø	12"W x 8"H	--	--	--	--	--	277 / 1ø	150	0.02"	6.10	180°/155.0°	55°/91.8°	0.5	0.13'	1R/12 FPI	1/2"	UNIT PROVIDED WITH 1/2" FOIL FACED INSULATION, DISCHARGE HOT WATER COIL, TRANSFORMER & DISCONNECT. (SEE SPECS.)
1-21	METALAIRE / TH-500	SINGLE DUCT VARIABLE VOLUME	400	400	.20"	8"ø	12"W x 10"H	--	--	--	--	--	277 / 1ø	400	0.16"	18.65	180°/141.9°	55°/97.2°	1.0	0.17'	2R/12 FPI	1/2"	UNIT PROVIDED WITH 1/2" FOIL FACED INSULATION, DISCHARGE HOT WATER COIL, TRANSFORMER & DISCONNECT. (SEE SPECS.)
1-22	METALAIRE / FVI-C2508-C	PARALLEL FAN POWERED VARIABLE VOL.	300	600	.21"	8"ø	16"W x 15"H	300	.30"	1/6	1.2	--	277 / 1ø	600	0.10"	28.06	180°/141.8°	66.5°/102.6°	1.0	0.06'	2 R/12 FPI	1/2"	UNIT PROVIDED WITH 1/2" FOIL FACED INSULATION, SINGLE SPEED MOTOR W/ SCR, DISCHARGE HOT WATER COIL, TRANSFORMER & DISCONNECT. (SEE SPECS.)
1-23	METALAIRE / TH-500	SINGLE DUCT VARIABLE VOLUME	100	200	.06"	6"ø	12"W x 8"H	--	--	--	--	--	277 / 1ø	100	0.02"	4.52	180°/149.1°	55°/95.9°	0.3	0.05'	1R/12 FPI	1/2"	UNIT PROVIDED WITH 1/2" FOIL FACED INSULATION, DISCHARGE HOT WATER COIL, TRANSFORMER & DISCONNECT. (SEE SPECS.)
1-24	METALAIRE / TH-500	SINGLE DUCT VARIABLE VOLUME	100	100	.02"	6"ø	12"W x 8"H	--	--	--	--	--	277 / 1ø	100	0.01"	4.52	180°/149.1°	55°/95.9°	0.3	0.03'	1R/12 FPI	1/2"	UNIT PROVIDED WITH 1/2" FOIL FACED INSULATION, DISCHARGE HOT WATER COIL, TRANSFORMER & DISCONNECT. (SEE SPECS.)
1-25	METALAIRE / FVI-C1508-C	PARALLEL FAN POWERED VARIABLE VOL.	250	500	.11"	8"ø	16"W x 15"H	250	.23"	1/8	0.9	--	277 / 1ø	500	0.03"	15.4	180°/148.4°	66.5°/95.0°	1.0	0.15'	1R/12 FPI	1/2"	UNIT PROVIDED WITH 1/2" FOIL FACED INSULATION, SINGLE SPEED MOTOR W/ SCR, DISCHARGE HOT WATER COIL, TRANSFORMER & DISCONNECT. (SEE SPECS.)
1-26	METALAIRE / FVI-C1506-C	PARALLEL FAN POWERED VARIABLE VOL.	150	300	.10"	6"ø	16"W x 15"H	150	.21"	1/8	0.9	--	277 / 1ø	300	0.01"	12.47	180°/154.5°	63.5°/104.9°	1.0	0.14'	1 R/12 FPI	1/2"	UNIT PROVIDED WITH 1/2" FOIL FACED INSULATION, SINGLE SPEED MOTOR W/ SCR, DISCHARGE HOT WATER COIL, TRANSFORMER & DISCONNECT. (SEE SPECS.)
1-27	METALAIRE / TH-500	SINGLE DUCT VARIABLE VOLUME	100	150	.04"	6"ø	12"W x 8"H	--	--	--	--	--	277 / 1ø	100	0.02"	4.52	180°/149.1°	55°/95.9°	0.3	0.05'	1R/12 FPI	1/2"	UNIT PROVIDED WITH 1/2" FOIL FACED INSULATION, DISCHARGE HOT WATER COIL, TRANSFORMER & DISCONNECT. (SEE SPECS.)
1-28	METALAIRE / FVI-C1506-C	PARALLEL FAN POWERED VARIABLE VOL.	150	300	.10"	6"ø	16"W x 15"H	150	.21"	1/8	0.9	--	277 / 1ø	300	0.01"	12.47	180°/154.5°	63.5°/104.9°	1.0	0.14'	1 R/12 FPI	1/2"	UNIT PROVIDED WITH 1/2" FOIL FACED INSULATION, SINGLE SPEED MOTOR W/ SCR, DISCHARGE HOT WATER COIL, TRANSFORMER & DISCONNECT. (SEE SPECS.)
1-29	METALAIRE / FVI-C1506-C	PARALLEL FAN POWERED VARIABLE VOL.	150	300	.10"	6"ø	16"W x 15"H	150	.21"	1/8	0.9	--	277 / 1ø	300	0.01"	12.47	180°/154.5°	63.5°/104.9°	1.0	0.14'	1 R/12 FPI	1/2"	UNIT PROVIDED WITH 1/2" FOIL FACED INSULATION, SINGLE SPEED MOTOR W/ SCR, DISCHARGE HOT WATER COIL, TRANSFORMER & DISCONNECT. (SEE SPECS.)
1-30	METALAIRE / TH-500	SINGLE DUCT VARIABLE VOLUME	120	120	.03"	6"ø	12"W x 8"H	--	--	--	--	--	277 / 1ø	120	0.02"	5.53	180°/157.3°	55°/96.8°	0.5	0.13'	1R/12 FPI	1/2"	UNIT PROVIDED WITH 1/2" FOIL FACED INSULATION, DISCHARGE HOT WATER COIL, TRANSFORMER & DISCONNECT. (SEE SPECS.)
1-31	METALAIRE / TH-500	SINGLE DUCT VARIABLE VOLUME	120	120	.03"	6"ø	12"W x 8"H	--	--	--	--	--	277 / 1ø	120	0.02"	5.53	180°/157.3°	55°/96.8°	0.5	0.13'	1R/12 FPI	1/2"	UNIT PROVIDED WITH 1/2" FOIL FACED INSULATION, DISCHARGE HOT WATER COIL, TRANSFORMER & DISCONNECT. (SEE SPECS.)
1-32	METALAIRE / TH-500	SINGLE DUCT VARIABLE VOLUME	120	240	.09"	6"ø	12"W x 8"H	--	--	--	--	--	277 / 1ø	120	0.05"	5.53	180°/157.3°	55°/96.8°	0.5	0.13'	1R/12 FPI	1/2"	UNIT PROVIDED WITH 1/2" FOIL FACED INSULATION, DISCHARGE HOT WATER COIL, TRANSFORMER & DISCONNECT. (SEE SPECS.)
1-33	METALAIRE / TH-500	SINGLE DUCT VARIABLE VOLUME	120	120	.03"	6"ø	12"W x 8"H	--	--	--	--	--	277 / 1ø	120	0.02"	5.53	180°/157.3°	55°/96.8°	0.5	0.13'	1R/12 FPI	1/2"	UNIT PROVIDED WITH 1/2" FOIL FACED INSULATION, DISCHARGE HOT WATER COIL, TRANSFORMER & DISCONNECT. (SEE SPECS.)
1-34	METALAIRE / TH-500	SINGLE DUCT VARIABLE VOLUME	120	120	.03"	6"ø	12"W x 8"H	--	--	--	--	--	277 / 1ø	120	0.02"	5.53	180°/157.3°	55°/96.8°	0.5	0.13'	1R/12 FPI	1/2"	UNIT PROVIDED WITH 1/2" FOIL FACED INSULATION, DISCHARGE HOT WATER COIL, TRANSFORMER & DISCONNECT. (SEE SPECS.)
1-35	METALAIRE / TH-500	SINGLE DUCT VARIABLE VOLUME	120	120	.03"	6"ø	12"W x 8"H	--	--	--	--	--	277 / 1ø	120	0.02"	5.53	180°/157.3°	55°/96.8°	0.5	0.13'	1R/12 FPI	1/2"	UNIT PROVIDED WITH 1/2" FOIL FACED INSULATION, DISCHARGE HOT WATER COIL, TRANSFORMER & DISCONNECT. (SEE SPECS.)
1-36	METALAIRE / FVI-C1506-C	PARALLEL FAN POWERED VARIABLE VOL.	150	300	.10"	6"ø	16"W x 15"H	150	.21"	1/8	0.9	--	277 / 1ø	300	0.01"	12.47	180°/154.5°	63.5°/104.9°	1.0	0.14'	1 R/12 FPI	1/2"	UNIT PROVIDED WITH 1/2" FOIL FACED INSULATION, SINGLE SPEED MOTOR W/ SCR, DISCHARGE HOT WATER COIL, TRANSFORMER & DISCONNECT. (SEE SPECS.)
1-37	METALAIRE / FVI-C1506-C	PARALLEL FAN POWERED VARIABLE VOL.	150	300	.10"	6"ø	16"W x 15"H	150	.21"	1/8	0.9	--	277 / 1ø	300	0.01"	12.47	180°/154.5°	63.5°/104.9°	1.0	0.14'	1 R/12 FPI	1/2"	UNIT PROVIDED WITH 1/2" FOIL FACED INSULATION, SINGLE SPEED MOTOR W/ SCR, DISCHARGE HOT WATER COIL, TRANSFORMER & DISCONNECT. (SEE SPECS.)
1-38	METALAIRE / TH-500	SINGLE DUCT VARIABLE VOLUME	120	120	.03"	6"ø	12"W x 8"H	--	--	--	--	--	277 / 1ø	120	0.02"	5.53	180°/157.3°	55°/96.8°	0.5	0.13'	1R/12 FPI	1/2"	UNIT PROVIDED WITH 1/2" FOIL FACED INSULATION, DISCHARGE HOT WATER COIL, TRANSFORMER & DISCONNECT. (SEE SPECS.)
1-39	METALAIRE / FVI-C1506-C	PARALLEL FAN POWERED VARIABLE VOL.	150	300	.10"	6"ø	16"W x 15"H	150	.21"	1/8	0.9	--	277 / 1ø	300	0.01"	12.47	180°/154.5°	63.5°/104.9°	1.0	0.14'	1 R/12 FPI	1/2"	UNIT PROVIDED WITH 1/2" FOIL FACED INSULATION, SINGLE SPEED MOTOR W/ SCR, DISCHARGE HOT WATER COIL, TRANSFORMER & DISCONNECT. (SEE SPECS.)
1-40	METALAIRE / FVI-C1506-C	PARALLEL FAN POWERED VARIABLE VOL.	175	350	.17"	6"ø	16"W x 15"H	175	.24"	1/8	0.9	--	277 / 1ø	350	0.04"	18.84	180°/141.5°	66.5°/116.3°	1.0	0.06'	2 R/12 FPI	1/2"	UNIT PROVIDED WITH 1/2" FOIL FACED INSULATION, SINGLE SPEED MOTOR W/ SCR, DISCHARGE HOT WATER COIL, TRANSFORMER & DISCONNECT. (SEE SPECS.)
1-41	METALAIRE / FVI-C1508-C	PARALLEL FAN POWERED VARIABLE VOL.	275	550	.13"	8"ø	16"W x 15"H	250	.24"	1/8	.09	--	277 / 1ø	525	0.04"	15.69	180°/147.9°	66.5°/94.2°	1.0	0.15	1R/12 FPI	1/2"	UNIT PROVIDED WITH 1/2" FOIL FACED INSULATION, SINGLE SPEED MOTOR W/ SCR, DISCHARGE HOT WATER COIL, TRANSFORMER & DISCONNECT. (SEE SPECS.)
1-42	METALAIRE / TH-500	SINGLE DUCT VARIABLE VOLUME	0	75	.01"	6"ø	12"W x 8"H	--	--	--	--	--	277 / 1ø	--	--	--	--	--	--	--	--	--	UNIT PROVIDED WITH 1/2" FOIL FACED INSULATION, TRANSFORMER & DISCONNECT. (SEE SPECS.)
1-43	METALAIRE / FVI-C1508-C	PARALLEL FAN POWERED VARIABLE VOL.	275	550	.13"	8"ø	16"W x 15"H	250	.24"	1/8	.09	--	277 / 1ø	525	0.04"	15.69	180°/147.9°	66.5°/94.2°	1.0	0.15	1R/12 FPI	1/2"	UNIT PROVIDED WITH 1/2" FOIL FACED INSULATION, SINGLE SPEED MOTOR W/ SCR, DISCHARGE HOT WATER COIL, TRANSFORMER & DISCONNECT. (SEE SPECS.)
1-44	METALAIRE / FVI-C1508-C	PARALLEL FAN POWERED VARIABLE VOL.	275	550	.13"	8"ø	16"W x 15"H	250	.24"	1/8	.09	--	277 / 1ø	525	0.04"	15.69	180°/147.9°	66.5°/94.2°	1.0	0.15	1R/12 FPI	1/2"	UNIT PROVIDED WITH 1/2" FOIL FACED INSULATION, SINGLE SPEED MOTOR W/ SCR, DISCHARGE HOT WATER COIL, TRANSFORMER & DISCONNECT. (SEE SPECS.)
1-45	METALAIRE / TH-500	SINGLE DUCT VARIABLE VOLUME	0	150	.02"	6"ø	12"W x 8"H	--	--	--	--	--	277 / 1ø	--	--	--	--	--	--	--	--	--	UNIT PROVIDED WITH 1/2" FOIL FACED INSULATION, TRANSFORMER & DISCONNECT. (SEE SPECS.)

ARKANSAS STATE UNIVERSITY

DONALD W. REYNOLDS CENTER FOR HEALTH SCIENCES
ARKANSAS STATE UNIVERSITY
JONESBORO, ARKANSAS

BRACKETT KRENNERICH architects
100 East Huntington, Suite D P.O. Box 1655 Jonesboro, Arkansas 72403-1655
870-932-0571 Fax: 870-932-0975 www.bkarchits.com

Commission Number 12406

M402

Date: January 25, 2008

AIR TERMINAL SCHEDULE (AHU-2)

DESIG.	MFR/MDL.	TYPE	PRIMARY CFM		UNIT A.P.D.	INLET SIZE	OUTLET SIZE	FAN DATA						HEATING WATER COIL DATA										REMARKS
			MIN.	MAX.				CFM	ESP	HP	MCA	MOCP	VOLT/PH	CFM	APD	MBH	EWT/LWT	EAT/LAT	GPM	WPD	ROW/FIN	PIPE SIZE	
2-01	METALAIRE / TH-500	SINGLE DUCT VARIABLE VOLUME	250	500	.29"	8"ø	12"W x 10"H	--	--	--	--	--	277 / 1ø	250	0.37"	15.13	180'/149.0'	55'/109.7'	1.0	0.17'	2R/12 FPI	1/2"	UNIT PROVIDED WITH 1/2" FOIL FACED INSULATION, DISCHARGE HOT WATER COIL, TRANSFORMER & DISCONNECT. (SEE SPECS.)
2-02	METALAIRE / TH-500	SINGLE DUCT VARIABLE VOLUME	0	150	.02"	6"ø	12"W x 8"H	--	--	--	--	--	277 / 1ø	--	--	--	--	--	--	--	--	--	UNIT PROVIDED WITH 1/2" FOIL FACED INSULATION, TRANSFORMER & DISCONNECT. (SEE SPECS.)
2-03	METALAIRE / TH-500	SINGLE DUCT VARIABLE VOLUME	120	100	.03"	6"ø	12"W x 8"H	--	--	--	--	--	277 / 1ø	100	0.01"	4.52	180'/149.1'	55'/95.9'	0.3	0.03'	1R/12 FPI	1/2"	UNIT PROVIDED WITH 1/2" FOIL FACED INSULATION, DISCHARGE HOT WATER COIL, TRANSFORMER & DISCONNECT. (SEE SPECS.)
2-04	METALAIRE / TH-500	SINGLE DUCT VARIABLE VOLUME	120	100	.03"	6"ø	12"W x 8"H	--	--	--	--	--	277 / 1ø	100	0.01"	4.52	180'/149.1'	55'/95.9'	0.3	0.03'	1R/12 FPI	1/2"	UNIT PROVIDED WITH 1/2" FOIL FACED INSULATION, DISCHARGE HOT WATER COIL, TRANSFORMER & DISCONNECT. (SEE SPECS.)
2-05	METALAIRE / TH-500	SINGLE DUCT VARIABLE VOLUME	120	100	.03"	6"ø	12"W x 8"H	--	--	--	--	--	277 / 1ø	100	0.01"	4.52	180'/149.1'	55'/95.9'	0.3	0.03'	1R/12 FPI	1/2"	UNIT PROVIDED WITH 1/2" FOIL FACED INSULATION, DISCHARGE HOT WATER COIL, TRANSFORMER & DISCONNECT. (SEE SPECS.)
2-06	METALAIRE / FVI-C4512-C	PARALLEL FAN POWERED VARIABLE VOL.	700	2,000	.48"	12"ø	20"W x 17.5"H	800	.44"	1/3	3.6	--	277 / 1ø	1,500	0.74"	63.02	180'/147.8'	64.9'/103.7'	4.0	1.15'	2R/12 FPI	1"	UNIT PROVIDED WITH 1/2" FOIL FACED INSULATION, SINGLE SPEED MOTOR W/ SCR, DISCHARGE HOT WATER COIL, TRANSFORMER & DISCONNECT. (SEE SPECS.)
2-07	METALAIRE / FVI-C4512-C	PARALLEL FAN POWERED VARIABLE VOL.	700	2,000	.48"	12"ø	20"W x 17.5"H	800	.44"	1/3	3.6	--	277 / 1ø	1,500	0.74"	63.02	180'/147.8'	64.9'/103.7'	4.0	1.15'	2R/12 FPI	1"	UNIT PROVIDED WITH 1/2" FOIL FACED INSULATION, SINGLE SPEED MOTOR W/ SCR, DISCHARGE HOT WATER COIL, TRANSFORMER & DISCONNECT. (SEE SPECS.)
2-08	METALAIRE / FVI-C4512-C	PARALLEL FAN POWERED VARIABLE VOL.	700	2,000	.48"	12"ø	20"W x 17.5"H	800	.44"	1/3	3.6	--	277 / 1ø	1,500	0.74"	63.02	180'/147.8'	64.9'/103.7'	4.0	1.15'	2R/12 FPI	1"	UNIT PROVIDED WITH 1/2" FOIL FACED INSULATION, SINGLE SPEED MOTOR W/ SCR, DISCHARGE HOT WATER COIL, TRANSFORMER & DISCONNECT. (SEE SPECS.)
2-09	METALAIRE / TH-500	SINGLE DUCT VARIABLE VOLUME	135	275	.19"	6"ø	12"W x 8"H	--	--	--	--	--	277 / 1ø	135	0.14"	8.36	180'/145.8'	55'/111.3'	0.5	0.03'	2R/12 FPI	1/2"	UNIT PROVIDED WITH 1/2" FOIL FACED INSULATION, DISCHARGE HOT WATER COIL, TRANSFORMER & DISCONNECT. (SEE SPECS.)
2-10	METALAIRE / FVI-C3510-C	PARALLEL FAN POWERED VARIABLE VOL.	460	910	.21"	10"ø	20"W x 17.5"H	400	.30"	1/4	1.9	--	277 / 1ø	860	0.20"	40.37	180'/138.8'	65.7'/109.1'	2.0	0.30'	2R/12 FPI	3/4"	UNIT PROVIDED WITH 1/2" FOIL FACED INSULATION, SINGLE SPEED MOTOR W/ SCR, DISCHARGE HOT WATER COIL, TRANSFORMER & DISCONNECT. (SEE SPECS.)
2-11	METALAIRE / FVI-C3510-C	PARALLEL FAN POWERED VARIABLE VOL.	460	910	.21"	10"ø	20"W x 17.5"H	400	.30"	1/4	1.9	--	277 / 1ø	860	0.20"	40.37	180'/138.8'	65.7'/109.1'	2.0	0.30'	2R/12 FPI	3/4"	UNIT PROVIDED WITH 1/2" FOIL FACED INSULATION, SINGLE SPEED MOTOR W/ SCR, DISCHARGE HOT WATER COIL, TRANSFORMER & DISCONNECT. (SEE SPECS.)
2-12	METALAIRE / FVI-C3510-C	PARALLEL FAN POWERED VARIABLE VOL.	460	910	.21"	10"ø	20"W x 17.5"H	400	.30"	1/4	1.9	--	277 / 1ø	860	0.20"	40.37	180'/138.8'	65.7'/109.1'	2.0	0.30'	2R/12 FPI	3/4"	UNIT PROVIDED WITH 1/2" FOIL FACED INSULATION, SINGLE SPEED MOTOR W/ SCR, DISCHARGE HOT WATER COIL, TRANSFORMER & DISCONNECT. (SEE SPECS.)
2-13	METALAIRE / TH-500	SINGLE DUCT VARIABLE VOLUME	100	150	.04"	6"ø	12"W x 8"H	--	--	--	--	--	277 / 1ø	100	0.02"	4.52	180'/149.1'	55'/95.9'	0.3	0.05'	1R/12 FPI	1/2"	UNIT PROVIDED WITH 1/2" FOIL FACED INSULATION, DISCHARGE HOT WATER COIL, TRANSFORMER & DISCONNECT. (SEE SPECS.)
2-14	METALAIRE / FVI-C1506-C	PARALLEL FAN POWERED VARIABLE VOL.	100	250	.09"	6"ø	16"W x 15"H	150	.22"	1/8	0.9	--	277 / 1ø	250	0.02"	12.4	180'/129.4'	67.8'/113.9'	0.5	0.02'	2R/12 FPI	1/2"	UNIT PROVIDED WITH 1/2" FOIL FACED INSULATION, SINGLE SPEED MOTOR W/ SCR, DISCHARGE HOT WATER COIL, TRANSFORMER & DISCONNECT. (SEE SPECS.)
2-15	METALAIRE / FVI-C1506-C	PARALLEL FAN POWERED VARIABLE VOL.	100	250	.09"	6"ø	16"W x 15"H	150	.22"	1/8	0.9	--	277 / 1ø	250	0.02"	12.4	180'/129.4'	67.8'/113.9'	0.5	0.02'	2R/12 FPI	1/2"	UNIT PROVIDED WITH 1/2" FOIL FACED INSULATION, SINGLE SPEED MOTOR W/ SCR, DISCHARGE HOT WATER COIL, TRANSFORMER & DISCONNECT. (SEE SPECS.)
2-16	METALAIRE / FVI-C1506-C	PARALLEL FAN POWERED VARIABLE VOL.	150	300	.10"	6"ø	16"W x 15"H	150	.21"	1/8	0.9	--	277 / 1ø	300	0.01"	12.47	180'/154.5'	63.5'/104.9'	1.0	0.14'	1 R/12 FPI	1/2"	UNIT PROVIDED WITH 1/2" FOIL FACED INSULATION, SINGLE SPEED MOTOR W/ SCR, DISCHARGE HOT WATER COIL, TRANSFORMER & DISCONNECT. (SEE SPECS.)
2-17	METALAIRE / TH-500	SINGLE DUCT VARIABLE VOLUME	150	200	.11"	6"ø	12"W x 8"H	--	--	--	--	--	277 / 1ø	150	0.08"	8.80	180'/144.0'	55'/108.1'	0.5	0.03'	2R/12 FPI	1/2"	UNIT PROVIDED WITH 1/2" FOIL FACED INSULATION, DISCHARGE HOT WATER COIL, TRANSFORMER & DISCONNECT. (SEE SPECS.)
2-18	METALAIRE / FVI-C2508-C	PARALLEL FAN POWERED VARIABLE VOL.	350	650	.21"	8"ø	16"W x 15"H	250	.30"	1/6	1.2	--	277 / 1ø	600	0.10"	28.06	180'/141.8'	63.3'/106.3'	1.5	0.14'	2 R/12 FPI	3/4"	UNIT PROVIDED WITH 1/2" FOIL FACED INSULATION, SINGLE SPEED MOTOR W/ SCR, DISCHARGE HOT WATER COIL, TRANSFORMER & DISCONNECT. (SEE SPECS.)
2-19	METALAIRE / TH-500	SINGLE DUCT VARIABLE VOLUME	100	150	.04"	6"ø	12"W x 8"H	--	--	--	--	--	277 / 1ø	100	0.02"	4.52	180'/149.1'	55'/95.9'	0.3	0.05'	1R/12 FPI	1/2"	UNIT PROVIDED WITH 1/2" FOIL FACED INSULATION, DISCHARGE HOT WATER COIL, TRANSFORMER & DISCONNECT. (SEE SPECS.)
2-20	METALAIRE / TH-500	SINGLE DUCT VARIABLE VOLUME	100	150	.04"	6"ø	12"W x 8"H	--	--	--	--	--	277 / 1ø	100	0.02"	4.52	180'/149.1'	55'/95.9'	0.3	0.05'	1R/12 FPI	1/2"	UNIT PROVIDED WITH 1/2" FOIL FACED INSULATION, DISCHARGE HOT WATER COIL, TRANSFORMER & DISCONNECT. (SEE SPECS.)
2-21	METALAIRE / TH-500	SINGLE DUCT VARIABLE VOLUME	150	300	.13"	6"ø	12"W x 8"H	--	--	--	--	--	277 / 1ø	150	0.02"	6.10	180'/155.0'	55'/91.8'	0.5	0.13'	1R/12 FPI	1/2"	UNIT PROVIDED WITH 1/2" FOIL FACED INSULATION, DISCHARGE HOT WATER COIL, TRANSFORMER & DISCONNECT. (SEE SPECS.)
2-22	METALAIRE / TH-500	SINGLE DUCT VARIABLE VOLUME	150	200	.11"	6"ø	12"W x 8"H	--	--	--	--	--	277 / 1ø	150	0.08"	8.80	180'/144.0'	55'/108.1'	0.5	0.03'	2R/12 FPI	1/2"	UNIT PROVIDED WITH 1/2" FOIL FACED INSULATION, DISCHARGE HOT WATER COIL, TRANSFORMER & DISCONNECT. (SEE SPECS.)
2-23	METALAIRE / FVI-C1506-C	PARALLEL FAN POWERED VARIABLE VOL.	140	400	.18"	6"ø	16"W x 15"H	200	.22"	1/8	0.9	--	277 / 1ø	340	0.02"	12.92	180'/153.5'	68.5'/103.8'	1.0	0.14'	1 R/12 FPI	3/4"	UNIT PROVIDED WITH 1/2" FOIL FACED INSULATION, SINGLE SPEED MOTOR W/ SCR, DISCHARGE HOT WATER COIL, TRANSFORMER & DISCONNECT. (SEE SPECS.)
2-24	METALAIRE / FVI-C1506-C	PARALLEL FAN POWERED VARIABLE VOL.	140	400	.18"	6"ø	16"W x 15"H	200	.22"	1/8	0.9	--	277 / 1ø	340	0.02"	12.92	180'/153.5'	68.5'/103.8'	1.0	0.14'	1 R/12 FPI	3/4"	UNIT PROVIDED WITH 1/2" FOIL FACED INSULATION, SINGLE SPEED MOTOR W/ SCR, DISCHARGE HOT WATER COIL, TRANSFORMER & DISCONNECT. (SEE SPECS.)
2-25	METALAIRE / FVI-C2508-C	PARALLEL FAN POWERED VARIABLE VOL.	200	650	.18"	8"ø	16"W x 15"H	450	.26"	1/4	1.9	--	277 / 1ø	650	0.11"	34.6	180'/144.6'	68.5'/117.9'	2.0	0.30'	2R/12 FPI	3/4"	UNIT PROVIDED WITH 1/2" FOIL FACED INSULATION, SINGLE SPEED MOTOR W/ SCR, DISCHARGE HOT WATER COIL, TRANSFORMER & DISCONNECT. (SEE SPECS.)
2-26	METALAIRE / TH-500	SINGLE DUCT VARIABLE VOLUME	150	200	.11"	6"ø	12"W x 8"H	--	--	--	--	--	277 / 1ø	150	0.08"	8.80	180'/144.0'	55'/108.1'	0.5	0.03'	2R/12 FPI	1/2"	UNIT PROVIDED WITH 1/2" FOIL FACED INSULATION, DISCHARGE HOT WATER COIL, TRANSFORMER & DISCONNECT. (SEE SPECS.)
2-27	METALAIRE / TH-500	SINGLE DUCT VARIABLE VOLUME	100	100	.02"	6"ø	12"W x 8"H	--	--	--	--	--	277 / 1ø	100	0.01"	4.52	180'/149.1'	55'/95.9'	0.3	0.03'	1R/12 FPI	1/2"	UNIT PROVIDED WITH 1/2" FOIL FACED INSULATION, DISCHARGE HOT WATER COIL, TRANSFORMER & DISCONNECT. (SEE SPECS.)
2-28	METALAIRE / TH-500	SINGLE DUCT VARIABLE VOLUME	100	100	.02"	6"ø	12"W x 8"H	--	--	--	--	--	277 / 1ø	100	0.01"	4.52	180'/149.1'	55'/95.9'	0.3	0.03'	1R/12 FPI	1/2"	UNIT PROVIDED WITH 1/2" FOIL FACED INSULATION, DISCHARGE HOT WATER COIL, TRANSFORMER & DISCONNECT. (SEE SPECS.)
2-29	METALAIRE / TH-500	SINGLE DUCT VARIABLE VOLUME	320	320	.25"	6"ø	12"W x 8"H	--	--	--	--	--	277 / 1ø	320	0.18"	15.05	180'/149.2'	55'/97.6'	1.0	0.13'	2R/12 FPI	1/2"	UNIT PROVIDED WITH 1/2" FOIL FACED INSULATION, DISCHARGE HOT WATER COIL, TRANSFORMER & DISCONNECT. (SEE SPECS.)
2-30	METALAIRE / FVI-C2508-C	PARALLEL FAN POWERED VARIABLE VOL.	200	650	.18"	8"ø	16"W x 15"H	450	.26"	1/4	1.9	--	277 / 1ø	650	0.11"	34.6	180'/144.6'	68.5'/117.9'	2.0	0.30'	2R/12 FPI	3/4"	UNIT PROVIDED WITH 1/2" FOIL FACED INSULATION, SINGLE SPEED MOTOR W/ SCR, DISCHARGE HOT WATER COIL, TRANSFORMER & DISCONNECT. (SEE SPECS.)
2-31	METALAIRE / TH-500	SINGLE DUCT VARIABLE VOLUME	0	200	.04"	6"ø	12"W x 8"H	--	--	--	--	--	277 / 1ø	--	--	--	--	--	--	--	--	--	UNIT PROVIDED WITH 1/2" FOIL FACED INSULATION, TRANSFORMER & DISCONNECT. (SEE SPECS.)
2-32	METALAIRE / TH-500	SINGLE DUCT VARIABLE VOLUME	100	150	.04"	6"ø	12"W x 8"H	--	--	--	--	--	277 / 1ø	100	0.02"	4.52	180'/149.1'	55'/95.9'	0.3	0.05'	1R/12 FPI	1/2"	UNIT PROVIDED WITH 1/2" FOIL FACED INSULATION, DISCHARGE HOT WATER COIL, TRANSFORMER & DISCONNECT. (SEE SPECS.)
2-33	METALAIRE / TH-500	SINGLE DUCT VARIABLE VOLUME	100	200	.06"	6"ø	12"W x 8"H	--	--	--	--	--	277 / 1ø	100	0.02"	4.52	180'/149.1'	55'/95.9'	0.3	0.05'	1R/12 FPI	1/2"	UNIT PROVIDED WITH 1/2" FOIL FACED INSULATION, DISCHARGE HOT WATER COIL, TRANSFORMER & DISCONNECT. (SEE SPECS.)

ARKANSAS STATE UNIVERSITY

DONALD W. REYNOLDS
CENTER FOR HEALTH SCIENCES
ARKANSAS STATE UNIVERSITY
JONESBORO, ARKANSAS

BRACKETT KRENNERICH architects
100 East Huntington, Suite D P.O. Box 1655 Jonesboro, Arkansas 72403-1655
870-932-0571 Fax 870-932-0875 www.bkarchits.com

Commission Number
12406

M403

Date: January 25, 2008

AIR TERMINAL SCHEDULE (AHU-3)

DESIG.	MFR/MDL.	TYPE	PRIMARY CFM		UNIT A.P.D.	INLET SIZE	OUTLET SIZE	FAN DATA						HEATING WATER COIL DATA									REMARKS
			MIN.	MAX.				CFM	ESP	HP	MCA	MOCP	VOLT/PH	CFM	APD	MBH	EWT/LWT	EAT/LAT	GPM	WPD	ROW/FIN	PIPE SIZE	
3-01	METALAIRE / TH-500	SINGLE DUCT VARIABLE VOLUME	0	150	.02"	6"ø	12"W x 8"H	--	--	--	--	--	277 / 1ø	--	--	--	--	--	--	--	--	--	UNIT PROVIDED WITH 1/2" FOIL FACED INSULATION, TRANSFORMER & DISCONNECT. (SEE SPECS.)
3-02	METALAIRE / FVI-C3512-C	PARALLEL FAN POWERED VARIABLE VOL.	820	1,640	.35"	12"ø	20"W x 17.5"H	600	.42"	1/4	1.9	--	277 / 1ø	1,420	0.53"	54.92	180°/142.6°	68.5°/104.4°	3.0	0.66'	2R/12 FPI	3/4"	UNIT PROVIDED WITH 1/2" FOIL FACED INSULATION, SINGLE SPEED MOTOR W/ SCR, DISCHARGE HOT WATER COIL, TRANSFORMER & DISCONNECT. (SEE SPECS.)
3-03	METALAIRE / FVI-C3512-C	PARALLEL FAN POWERED VARIABLE VOL.	820	1,640	.35"	12"ø	20"W x 17.5"H	600	.42"	1/4	1.9	--	277 / 1ø	1,420	0.53"	54.92	180°/142.6°	68.5°/104.4°	3.0	0.66'	2R/12 FPI	3/4"	UNIT PROVIDED WITH 1/2" FOIL FACED INSULATION, SINGLE SPEED MOTOR W/ SCR, DISCHARGE HOT WATER COIL, TRANSFORMER & DISCONNECT. (SEE SPECS.)
3-04	METALAIRE / TH-500	SINGLE DUCT VARIABLE VOLUME	320	320	.25"	6"ø	12"W x 8"H	--	--	--	--	--	277 / 1ø	320	0.18"	15.05	180°/149.2°	55°/97.6°	1.0	0.13'	2R/12 FPI	1/2"	UNIT PROVIDED WITH 1/2" FOIL FACED INSULATION, DISCHARGE HOT WATER COIL, TRANSFORMER & DISCONNECT. (SEE SPECS.)
3-05	METALAIRE / TH-500	SINGLE DUCT VARIABLE VOLUME	0	200	.04"	6"ø	12"W x 8"H	--	--	--	--	--	277 / 1ø	--	--	--	--	--	--	--	--	--	UNIT PROVIDED WITH 1/2" FOIL FACED INSULATION, TRANSFORMER & DISCONNECT. (SEE SPECS.)
3-06	METALAIRE / FVI-C2508-C	PARALLEL FAN POWERED VARIABLE VOL.	300	600	.21"	8"ø	16"W x 15"H	300	.30"	1/6	1.2	--	277 / 1ø	600	0.10"	28.06	180°/141.8°	66.5°/102.6°	1.0	0.06'	2 R/12 FPI	1/2"	UNIT PROVIDED WITH 1/2" FOIL FACED INSULATION, SINGLE SPEED MOTOR W/ SCR, DISCHARGE HOT WATER COIL, TRANSFORMER & DISCONNECT. (SEE SPECS.)
3-07	METALAIRE / FVI-C1508-C	PARALLEL FAN POWERED VARIABLE VOL.	170	420	.10"	8"ø	16"W x 15"H	200	.22"	1/8	0.9	--	277 / 1ø	370	0.02"	13.40	180°/152.6°	68.5°/102.2°	1.0	0.14'	1R/12 FPI	1/2"	UNIT PROVIDED WITH 1/2" FOIL FACED INSULATION, SINGLE SPEED MOTOR W/ SCR, DISCHARGE HOT WATER COIL, TRANSFORMER & DISCONNECT. (SEE SPECS.)
3-08	METALAIRE / TH-500	SINGLE DUCT VARIABLE VOLUME	180	360	.31"	6"ø	12"W x 8"H	--	--	--	--	--	277 / 1ø	180	0.22"	11.50	180°/156.4°	55°/112.9°	1.0	0.13'	2R/12 FPI	1/2"	UNIT PROVIDED WITH 1/2" FOIL FACED INSULATION, DISCHARGE HOT WATER COIL, TRANSFORMER & DISCONNECT. (SEE SPECS.)
3-09	METALAIRE / FVI-C3510-C	PARALLEL FAN POWERED VARIABLE VOL.	400	800	.17"	10"ø	20"W x 17.5"H	400	.29"	1/4	1.9	--	277 / 1ø	800	0.16"	39.30	180°/139.8°	65.2°/110.6°	2.0	0.30'	2R/12 FPI	3/4"	UNIT PROVIDED WITH 1/2" FOIL FACED INSULATION, SINGLE SPEED MOTOR W/ SCR, DISCHARGE HOT WATER COIL, TRANSFORMER & DISCONNECT. (SEE SPECS.)
3-10	METALAIRE / FVI-C3510-C	PARALLEL FAN POWERED VARIABLE VOL.	600	1,200	.36"	10"ø	20"W x 17.5"H	600	.37"	1/4	1.9	--	277 / 1ø	1,200	0.31"	52.87	180°/144.0°	65.2°/105.9°	3.0	0.66'	2R/12 FPI	3/4"	UNIT PROVIDED WITH 1/2" FOIL FACED INSULATION, SINGLE SPEED MOTOR W/ SCR, DISCHARGE HOT WATER COIL, TRANSFORMER & DISCONNECT. (SEE SPECS.)
3-11	METALAIRE / FVI-C3510-C	PARALLEL FAN POWERED VARIABLE VOL.	400	800	.17"	10"ø	20"W x 17.5"H	400	.29"	1/4	1.9	--	277 / 1ø	800	0.16"	39.30	180°/139.8°	65.2°/110.6°	2.0	0.30'	2R/12 FPI	3/4"	UNIT PROVIDED WITH 1/2" FOIL FACED INSULATION, SINGLE SPEED MOTOR W/ SCR, DISCHARGE HOT WATER COIL, TRANSFORMER & DISCONNECT. (SEE SPECS.)
3-12	METALAIRE / TH-500	SINGLE DUCT VARIABLE VOLUME	150	230	.08"	6"ø	12"W x 8"H	--	--	--	--	--	277 / 1ø	150	0.02"	6.10	180°/155.0°	55°/91.8°	0.5	0.13'	1R/12 FPI	1/2"	UNIT PROVIDED WITH 1/2" FOIL FACED INSULATION, DISCHARGE HOT WATER COIL, TRANSFORMER & DISCONNECT. (SEE SPECS.)
3-13	METALAIRE / TH-500	SINGLE DUCT VARIABLE VOLUME	150	230	.08"	6"ø	12"W x 8"H	--	--	--	--	--	277 / 1ø	150	0.02"	6.10	180°/155.0°	55°/91.8°	0.5	0.13'	1R/12 FPI	1/2"	UNIT PROVIDED WITH 1/2" FOIL FACED INSULATION, DISCHARGE HOT WATER COIL, TRANSFORMER & DISCONNECT. (SEE SPECS.)
3-14	METALAIRE / FVI-C1506-C	PARALLEL FAN POWERED VARIABLE VOL.	140	400	.18"	6"ø	16"W x 15"H	200	.22"	1/8	0.9	--	277 / 1ø	340	0.02"	12.92	180°/153.5°	68.5°/103.8°	1.0	0.14'	1 R/12 FPI	3/4"	UNIT PROVIDED WITH 1/2" FOIL FACED INSULATION, SINGLE SPEED MOTOR W/ SCR, DISCHARGE HOT WATER COIL, TRANSFORMER & DISCONNECT. (SEE SPECS.)
3-15	METALAIRE / FVI-C5514-C	PARALLEL FAN POWERED VARIABLE VOL.	1,200	2,400	.50"	14"ø	24"W x 18"H	800	.49"	1/2	3.6	--	277 / 1ø	2,000	0.53"	76.19	180°/141.1°	65.2°/100.4°	4.0	1.25'	2R/12 FPI	1"	UNIT PROVIDED WITH 1/2" FOIL FACED INSULATION, SINGLE SPEED MOTOR W/ SCR, DISCHARGE HOT WATER COIL, TRANSFORMER & DISCONNECT. (SEE SPECS.)
3-16	METALAIRE / TH-500	SINGLE DUCT VARIABLE VOLUME	650	950	.52"	10"ø	14"W x 12.5"H	--	--	--	--	--	277 / 1ø	650	0.45"	29.67	180°/149.6°	55°/96.3°	2.0	0.51'	2R/12 FPI	3/4"	UNIT PROVIDED WITH 1/2" FOIL FACED INSULATION, DISCHARGE HOT WATER COIL, TRANSFORMER & DISCONNECT. (SEE SPECS.)
3-17	METALAIRE / TH-500	SINGLE DUCT VARIABLE VOLUME	650	950	.52"	10"ø	14"W x 12.5"H	--	--	--	--	--	277 / 1ø	650	0.45"	29.67	180°/149.6°	55°/96.3°	2.0	0.51'	2R/12 FPI	3/4"	UNIT PROVIDED WITH 1/2" FOIL FACED INSULATION, DISCHARGE HOT WATER COIL, TRANSFORMER & DISCONNECT. (SEE SPECS.)
3-18	METALAIRE / TH-500	SINGLE DUCT VARIABLE VOLUME	320	320	.25"	6"ø	12"W x 8"H	--	--	--	--	--	277 / 1ø	320	0.18"	15.05	180°/149.2°	55°/97.6°	1.0	0.13'	2R/12 FPI	1/2"	UNIT PROVIDED WITH 1/2" FOIL FACED INSULATION, DISCHARGE HOT WATER COIL, TRANSFORMER & DISCONNECT. (SEE SPECS.)
3-19	METALAIRE / FVI-C1506-C	PARALLEL FAN POWERED VARIABLE VOL.	140	400	.18"	6"ø	16"W x 15"H	200	.22"	1/8	0.9	--	277 / 1ø	340	0.02"	12.92	180°/153.5°	68.5°/103.8°	1.0	0.14'	1 R/12 FPI	3/4"	UNIT PROVIDED WITH 1/2" FOIL FACED INSULATION, SINGLE SPEED MOTOR W/ SCR, DISCHARGE HOT WATER COIL, TRANSFORMER & DISCONNECT. (SEE SPECS.)
3-20	METALAIRE / FVI-C5514-C	PARALLEL FAN POWERED VARIABLE VOL.	1,200	2,400	.36"	14"ø	24"W x 18"H	800	.49"	1/2	3.6	--	277 / 1ø	2,000	0.39"	76.91	180°/140.7°	64.2°/99.7°	4.0	1.25'	2R/12 FPI	1"	UNIT PROVIDED WITH 1/2" FOIL FACED INSULATION, SINGLE SPEED MOTOR W/ SCR, DISCHARGE HOT WATER COIL, TRANSFORMER & DISCONNECT. (SEE SPECS.)
3-21	METALAIRE / TH-500	SINGLE DUCT VARIABLE VOLUME	0	150	.02"	6"ø	12"W x 8"H	--	--	--	--	--	277 / 1ø	--	--	--	--	--	--	--	--	--	UNIT PROVIDED WITH 1/2" FOIL FACED INSULATION, TRANSFORMER & DISCONNECT. (SEE SPECS.)
3-22	METALAIRE / TH-500	SINGLE DUCT VARIABLE VOLUME	0	75	.01"	6"ø	12"W x 8"H	--	--	--	--	--	277 / 1ø	--	--	--	--	--	--	--	--	--	UNIT PROVIDED WITH 1/2" FOIL FACED INSULATION, TRANSFORMER & DISCONNECT. (SEE SPECS.)
3-23	METALAIRE / TH-500	SINGLE DUCT VARIABLE VOLUME	150	300	.13"	6"ø	12"W x 8"H	--	--	--	--	--	277 / 1ø	150	0.02"	6.10	180°/155.0°	55°/91.8°	0.5	0.13'	1R/12 FPI	1/2"	UNIT PROVIDED WITH 1/2" FOIL FACED INSULATION, DISCHARGE HOT WATER COIL, TRANSFORMER & DISCONNECT. (SEE SPECS.)
3-24	METALAIRE / FVI-C3512-C	PARALLEL FAN POWERED VARIABLE VOL.	750	1,250	.22"	12"ø	20"W x 17.5"H	500	.38"	1/4	1.9	--	277 / 1ø	1,250	0.34"	54.30	180°/143.0°	64.2°/104.3°	3.0	0.66'	2R/12 FPI	3/4"	UNIT PROVIDED WITH 1/2" FOIL FACED INSULATION, SINGLE SPEED MOTOR W/ SCR, DISCHARGE HOT WATER COIL, TRANSFORMER & DISCONNECT. (SEE SPECS.)
3-25	METALAIRE / FVI-C3512-C	PARALLEL FAN POWERED VARIABLE VOL.	750	1,250	.22"	12"ø	20"W x 17.5"H	500	.38"	1/4	1.9	--	277 / 1ø	1,250	0.34"	54.30	180°/143.0°	64.2°/104.3°	3.0	0.66'	2R/12 FPI	3/4"	UNIT PROVIDED WITH 1/2" FOIL FACED INSULATION, SINGLE SPEED MOTOR W/ SCR, DISCHARGE HOT WATER COIL, TRANSFORMER & DISCONNECT. (SEE SPECS.)
3-26	METALAIRE / FVI-C3510-C	PARALLEL FAN POWERED VARIABLE VOL.	450	950	.23"	10"ø	20"W x 17.5"H	450	.30"	1/4	1.9	--	277 / 1ø	900	0.21"	44.66	180°/143.5°	64.2°/110°	2.5	0.46'	2R/12 FPI	3/4"	UNIT PROVIDED WITH 1/2" FOIL FACED INSULATION, SINGLE SPEED MOTOR W/ SCR, DISCHARGE HOT WATER COIL, TRANSFORMER & DISCONNECT. (SEE SPECS.)
3-27	METALAIRE / FVI-C3510-C	PARALLEL FAN POWERED VARIABLE VOL.	495	1,100	.31"	10"ø	20"W x 17.5"H	550	.33"	1/4	1.9	--	277 / 1ø	1,045	0.27"	50.22	180°/145.8°	64.2°/108.5°	3	0.66'	2R/12 FPI	3/4"	UNIT PROVIDED WITH 1/2" FOIL FACED INSULATION, SINGLE SPEED MOTOR W/ SCR, DISCHARGE HOT WATER COIL, TRANSFORMER & DISCONNECT. (SEE SPECS.)

ARKANSAS STATE UNIVERSITY

DONALD W. REYNOLDS
CENTER FOR HEALTH SCIENCES
ARKANSAS STATE UNIVERSITY
JONESBORO, ARKANSAS

BRACKETT KRENNERICH architects
100 East Huntington, Suite D P.O. Box 1655 Jonesboro, Arkansas 72403-1655
870-932-0575 Fax: 870-932-0875 www.bkarchits.com

Commission Number
12406

M404

Date: January 25, 2008

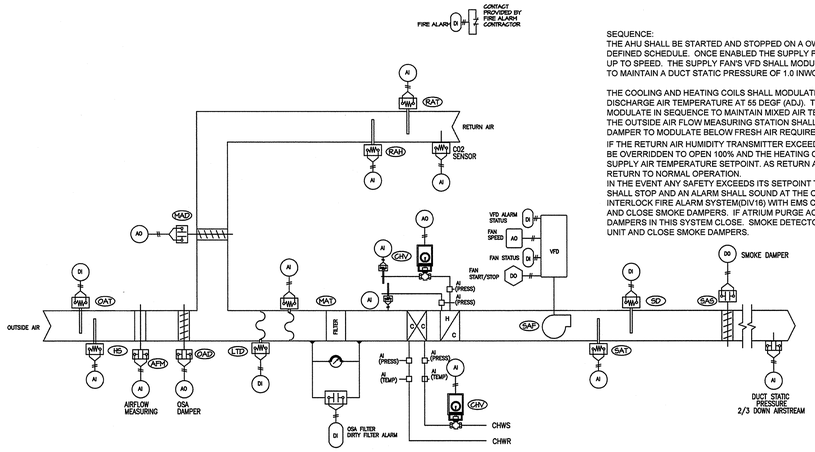

SEQUENCE:
THE AHU SHALL BE STARTED AND STOPPED ON A OWNER DEFINED SCHEDULE. ONCE ENABLED THE SUPPLY FAN SHALL RAMP UP TO SPEED. THE SUPPLY FAN'S VFD SHALL MODULATED THE SUPPLY FAN TO MAINTAIN A DUCT STATIC PRESSURE OF 1.0 INWC (ADJ).

THE COOLING AND HEATING COILS SHALL MODULATE IN SEQUENCE TO MAINTAIN DISCHARGE AIR TEMPERATURE AT 55 DEGF (ADJ). THE MIXED AIR DAMPERS SHALL MODULATE IN SEQUENCE TO MAINTAIN MIXED AIR TEMPERATURE AT 55 DEGF. THE OUTSIDE AIR FLOW MEASURING STATION SHALL NOT ALLOW THE OUTSIDE AIR DAMPER TO MODULATE BELOW FRESH AIR REQUIREMENTS.

IF THE RETURN AIR HUMIDITY TRANSMITTER EXCEEDS 60% RH THE COOLING VALVE SHALL BE OVERRIDDEN TO OPEN 100% AND THE HEATING COIL USED TO REHEAT THE SUPPLY AIR TO SUPPLY AIR TEMPERATURE SETPOINT. AS RETURN AIR HUMIDITY FALLS TO 45% RH THE UNIT SHALL RETURN TO NORMAL OPERATION.
IN THE EVENT ANY SAFETY EXCEEDS ITS SETPOINT THE SUPPLY FAN SHALL STOP AND AN ALARM SHALL SOUND AT THE OPERATOR WORKSTATION. INTERLOCK FIRE ALARM SYSTEM(DIV16) WITH EMS CONTROLLER. SHUT DOWN AHU AND CLOSE SMOKE DAMPERS. IF ATRIUM PURGE ACTIVATES OR IF ANY SMOKE DAMPERS IN THIS SYSTEM CLOSE. SMOKE DETECTORS @ UNITS WILL SHUTDOWN UNIT AND CLOSE SMOKE DAMPERS.

TYPICAL AIR HANDLING UNIT

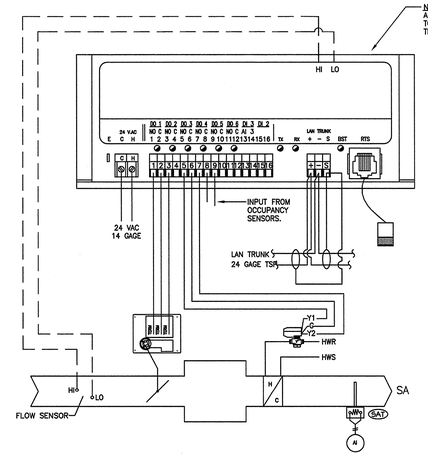

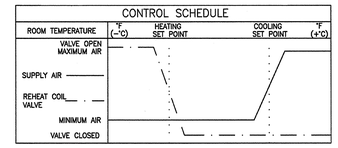

SEQUENCE:
THE VAV BOX SHALL BE CONTROLLED BY AN APPLICATION SPECIFIC CONTROLLER.
ON A CALL FOR COOLING THE CONTROLLER SHALL MODULATE THE DAMPER FROM 0% TO 100% OPEN TO MAINTAIN SPACE TEMPERATURE AT ITS SETPOINT. (OCCUPIED & UNOCCUPIED)
ON A CALL FOR HEAT THE CONTROLLER SHALL MODULATE THE DAMPER TO ITS MINIMUM AIR FLOW SETPOINT. ON A FURTHER CALL FOR HEAT THE CONTROLLER SHALL MODULATE THE HOT WATER VALVE OPEN TO MAINTAIN THE SPACE TEMPERATURE AT ITS SETPOINT
SPACE TEMPERATURE SHALL BE ADJUSTABLE AT THE WALL THERMOSTAT OR AT THE OPERATOR WORKSTATION.
OCCUPANCY SENSORS WILL DETERMINE OCCUPIED OR UNOCCUPIED STATUS.

V.A.V. with HOT WATER RE-HEAT

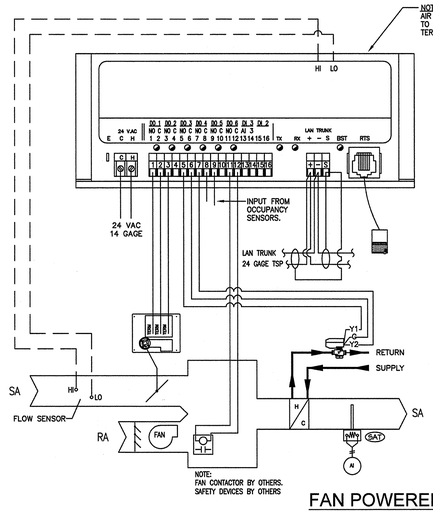

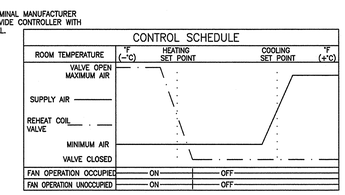

SEQUENCE:
THE FAN PWR VAV BOX SHALL BE CONTROLLED BY AN APPLICATION SPECIFIC CONTROLLER.
ON A CALL FOR COOLING THE CONTROLLER SHALL MODULATE THE DAMPER FROM 0% TO 100% OPEN TO MAINTAIN SPACE TEMPERATURE AT ITS SETPOINT. (OCCUPIED & UNOCCUPIED)
ON A CALL FOR HEAT THE CONTROLLER SHALL MODULATE THE DAMPER TO ITS MINIMUM AIR FLOW SETPOINT. ON A FURTHER CALL FOR HEAT THE CONTROLLER SHALL ENABLE THE FAN.
ON EVEN A FURTHER CALL FOR HEAT THE CONTROLLER SHALL MODULATE THE HOT WATER VALVE OPEN TO MAINTAIN THE SPACE TEMPERATURE AT ITS SETPOINT.
SPACE TEMPERATURE SHALL BE ADJUSTABLE AT THE WALL THERMOSTAT OR AT THE OPERATOR WORKSTATION.
OCCUPANCY SENSORS WILL DETERMINE OCCUPIED OR UNOCCUPIED STATUS.

FAN POWERED VAV BOX

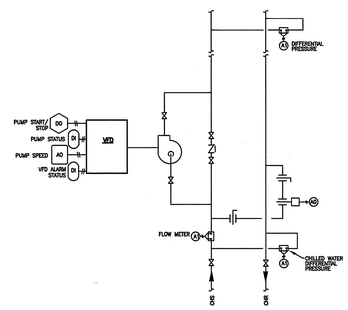

CHILLED WATER PIPING

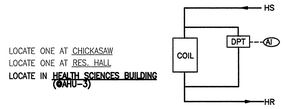

LOCATE ONE AT CHICKASAW
LOCATE ONE AT RES. HALL
LOCATE IN HEALTH SCIENCES BUILDING (@AHU-3)

DIFFERENTIAL PRESSURE TRANSMITTER
NOT TO SCALE

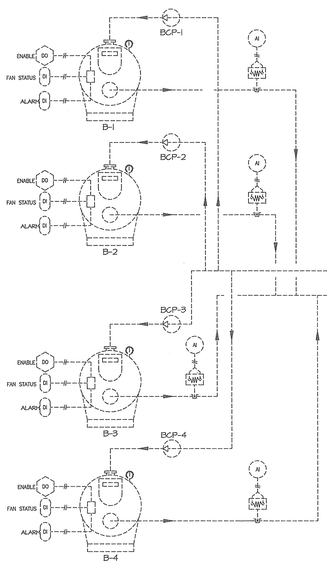

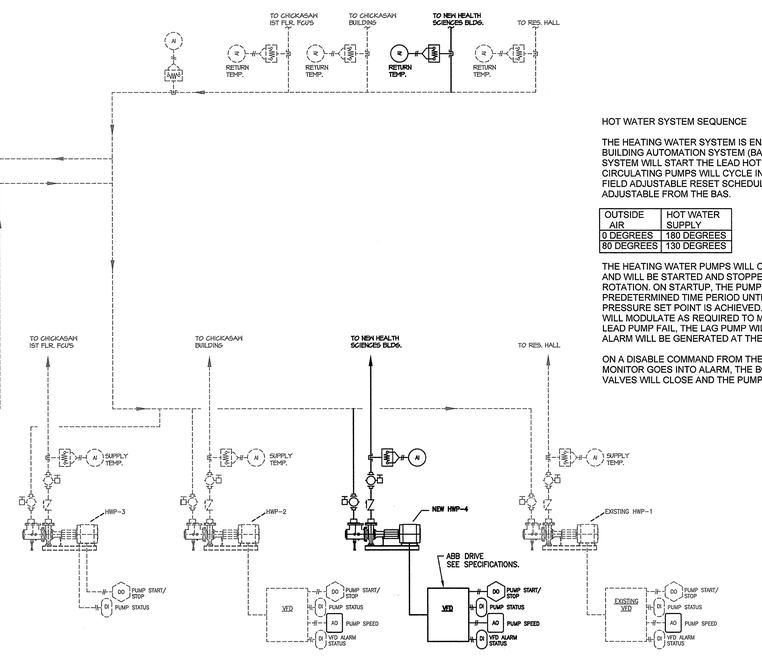

NEW HOT WATER PUMP IN CHICKASAW BUILDING

HOT WATER SYSTEM SEQUENCE

THE HEATING WATER SYSTEM IS ENABLED AND DISABLED FROM THE BUILDING AUTOMATION SYSTEM (BAS). ENABLING THE HEATING WATER SYSTEM WILL START THE LEAD HOT WATER PUMP. THE BOILERS AND CIRCULATING PUMPS WILL CYCLE IN SEQUENCE TO MAINTAIN THE FIELD ADJUSTABLE RESET SCHEDULE SHOWN BELOW, WHICH IS ALSO ADJUSTABLE FROM THE BAS.

OUTSIDE AIR	HOT WATER SUPPLY
0 DEGREES	180 DEGREES
80 DEGREES	130 DEGREES

THE HEATING WATER PUMPS WILL OPERATE IN A LEAD / LAG FASHION AND WILL BE STARTED AND STOPPED BY THE BAS IN AN ALTERNATING ROTATION. ON STARTUP, THE PUMP SPEED WILL RAMP UP OVER A PREDETERMINED TIME PERIOD UNTIL HEATING WATER SUPPLY PRESSURE SET POINT IS ACHIEVED. ONCE THIS OCCURS THE PUMP WILL MODULATE AS REQUIRED TO MAINTAIN SET POINT. SHOULD THE LEAD PUMP FAIL, THE LAG PUMP WILL AUTOMATICALLY START AND AN ALARM WILL BE GENERATED AT THE BAS.

ON A DISABLE COMMAND FROM THE BAS, OR IF THE REFRIGERANT MONITOR GOES INTO ALARM, THE BOILERS WILL SHUT DOWN, THE GAS VALVES WILL CLOSE AND THE PUMPS WILL TURN OFF.

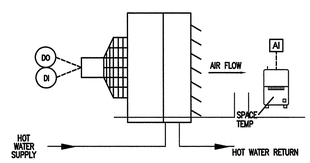

SEQUENCE
UNIT HEATER THERMOSTAT SHALL CYCLE FAN "ON" AS REQ'D TO MAINTAIN SETPOINT.

HYDRONIC UNIT HEATER

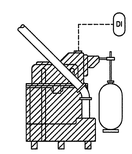

NOTE:

PUBLIC SAFETY ALARMS

THE FOLLOWING ALARMS SHALL BE FORWARDED TO CAMPUS SECURITY. COORDINATE WITH OWNER FOR OTHER REQUIRED ALARMS.

1. FIRE ALARM TO D.P.S.
2. SUMP PUMP (ELEVATOR PIT)

GENERAL ALARM:

1. MEDICAL AIR MANIFOLD ALARM.
2. MEDICAL VACUUM PUMP ALARM.

SUMP PUMP ALARM

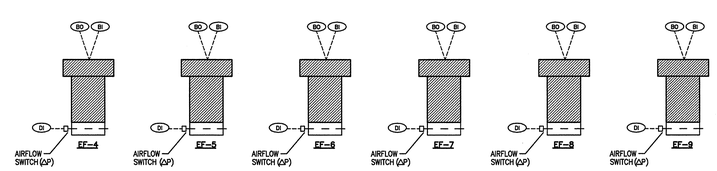

ATRIUM EXHAUST SYSTEM

EXHAUST FANS EF-4 THRU EF-9 RUN WHEN AN ALARM CONDITION IS DETECTED BY THE FIRE ALARM SYSTEM. THE EXTERIOR ATRIUM DOORS ARE UNLATCHED AND OPENED WHENEVER EF-4 THRU EF-9 ARE OPERATING. A MANUAL SWITCH, LOCATED AT THE DOORS IS PROVIDED, WHICH BYPASSES THE FIRE ALARM SYSTEM AND ALLOWS THE FANS AND DOORS TO BE MANUALLY OPERATED. (REFER TO SMOKE PURGE SYSTEM CONTROL WIRING DIAGRAM ON ELECTRICAL DRAWINGS)

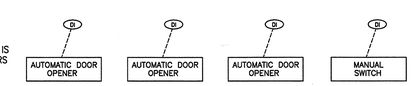

ATRIUM EXHAUST

ASU ARKANSAS STATE UNIVERSITY

DONALD W. REYNOLDS CENTER FOR HEALTH SCIENCES
ARKANSAS STATE UNIVERSITY
JONESBORO, ARKANSAS

BRACKETT KRENNERICH architects
100 East Huntington, Suite D P.O. Box 1655 Jonesboro, Arkansas 72403-1655
870-932-0571 Fax 870-932-0975 www.bkarchits.com

Commission Number 12406

M501

Date: January 25, 2008

DRAIN SCHEDULE

SYMBOL	MANUFACTURER	REMARKS
FD-1	WADE SERIES 1100-DT FLOOR DRAIN, CAST IRON BODY WITH FLANGE, CLAMPING COLLAR, SEEPAGE OPENINGS AND 7" DIA. SPECIAL NICKEL BRONZE TOP WITH 4" WIDE FLANGE FOR SYTHETIC, EPOXY OR CERAMIC GRANULAR FLOORING -WITH TRAP PRIMER TAP	TYPICAL TLT FD WHERE SYNTHETIC OR EPOXY TYPE FLOORING IS USED
FD-1A	WADE SERIES 1100STD FLOOR DRAIN, CAST IRON BODY WITH FLANGE, CLAMPING COLLAR, SEEPAGE OPENINGS AND 7" DIA. NICKEL BRONZE STRAINER -WITH TRAP PRIMER TAP	TYPICAL TLT FD WHERE TILE OR CONCRETE TYPE FLOORING IS USED
FD-2	WADE SERIES 2370 FLOOR DRAIN, CAST IRON, SQUARE TOP, SQUARE LOOSE SET DUCTILE IRON GRADE -WITH TRAP PRIMER TAP	FOR HVAC EQUIP ROOM -VERIFY EXACT LOCATIONS WITH HVAC EQUIP REQUIREMENTS
FD-3	WADE SERIES 9150 FLOOR SINK, 12"X12"X10" DEEP, ALUMINUM DOME SECONDARY STRAINER, 3/4" NICKEL BRONZE HINGED GRADE -WITH TRAP PRIMER TAP	FOR ELEV. SUMP PUMP DISCHARGE
RD-1	WADE SERIES 3000 ROOF DRAIN, CAST IRON BODY WITH COMBINED FLASHING COLLAR AND GRAVEL STOP, CAST IRON DOME, WITH UNDER DECK CLAMP, BOTTOM OUTLET, BEARING PAN/SUMP RECIEVER	FURNISH "AE" ADJUSTABLE EXTENSION AS REQUIRED

NOTE: ALL FLOOR DRAINS SHALL BE ACCESSORIZE FOR VANDAL PROOF INSTALLATION
ALL FLOOR DRAINS SHALL HAVE TRAP PRIMERS

FIRE PROTECTION LEGEND

SYMBOL	DESCRIPTION
—SP—	FIRE SPRINKLER PIPING
—F—	FIRE PROTECTION WATER SUPPLY
	UPRIGHT SPRINKLER HEAD
	RECESSED SPRINKLER HEAD IN CEILING
	EXTRA LARGE ORIFICE TYPE SPRINKLER HEAD
	DRY PENDENT ON DROP SPRINKLER HEAD
	CONCEALED TYPE SPRINKLER HEAD
	HORIZONTAL SIDEWALL SPRINKLER HEAD
	EXISTING SPRINKLER HEAD
	SUPERVISED INDICATING TYPE VALVE (O.S.&Y)
	FLOW SWITCH
	RECESSED FIRE HOSE CABINET
	RECESSED FIRE EXTINGUISHER CABINET
F.E.	FIRE EXTINGUISHER
F.H.C.	FIRE HOSE CABINET
O.S.&Y.	OUTSIDE SCREW & YOKE
F.E.C.	FIRE EXTINGUISHER CABINET
	FIRE HYDRANT
	FIRE DEPARTMENT CONNECTION

FIRE PROTECTION GENERAL NOTES:

1. THE BUILDING SHALL BE COMPLETELY SPRINKLED. SEE HVAC AND ELECTRICAL DRAWINGS FOR GRILLES, LIGHTS, ETC. AND COORDINATE SPRINKLER HEAD LOCATION AS REQUIRED. THESE SYSTEMS SHALL BE HYDRAULICALLY DESIGNED TO MEET NFPA 13, STATE AND LOCAL CODES. IN FINISHED AREAS LOCATE SPRINKLER HEADS SYMMETRICALLY IN ROOMS AND SPACES AS FAR AS PRACTICAL.
2. PROVIDE SPRINKLER HEADS AT TOP AND BOTTOM FLOORS OF ALL LARGE MECHANICAL CHASES (AS REQUIRED BY CODE).
3. SEE ARCHITECTURAL DRAWINGS FOR EXACT LOCATIONS OF HOSE CABINETS, FIRE EXTINGUISHER CABINETS, ETC.
4. COORDINATE FIRE SPRINKLER ZONING WITH ELECTRICAL DRAWINGS AND FIRE ALARM SYSTEM.
5. ALL VALVES MUST BE ACCESSIBLE, IF INSTALLED ABOVE A FIXED CEILING, ACCESS DOORS SHALL BE INSTALLED.
6. ALL 2 1/2" FIRE DEPARTMENT VALVES SHALL HAVE PRESSURE REDUCING DEVICES TO LIMIT PRESSURE TO THE CODE APPROVED 100 PSI.
7. ALL SPRINKLER BRANCHES DOWNSTREAM OF AN ALARM SHALL HAVE A 1" MINIMUM TEST DRAIN LINE WITH EASILY ACCESSIBLE VALVE. DISCHARGE DRAIN TO AN APPROPRIATE LOCATION, THRU OUTSIDE WALL IF POSSIBLE, OR TO A LARGE FLOOR DRAIN IN A MECHANICAL ROOM, ETC.
8. ALL SPRINKLER PIPING SHALL SLOPE TO LOW POINTS WITH VALVES FOR DRAINING.
9. ALL SPRINKLER HEADS SHALL BE QUICK RESPONSE TYPE, EXCEPT IN SPECIAL AREAS.
10. SPRINKLER HEADS SHALL BE LOCATED 15' (OR LESS) ON CENTER – EXTENDED COVERAGE HEADS NOT ACCEPTABLE.
11. PIPE ROUTING IS GENERAL AND IS SHOWN FOR COORDINATION WITH OTHER TRADES. SPRINKLER HEAD LAYOUT IS TO SHOW GENERAL HEAD LAYOUT AND SHALL NOT BE USED TO DETERMINE THE QUANTITY OF HEADS REQUIRED.. THE QUANTITY OF HEADS REQUIRED SHALL BE BASED ON THE REQUIREMENTS OF NFPA 13.
12. PROVIDE SYSTEM TO NFPA 13 COVERAGE AND OCCUPANCY REQUIREMENTS
13. WATER SUPPLY – FIELD VERIFY EXISTING CONDITIONS
14. INTERFACE SYSTEM WITH BUILDING FIRE AND SMOKE ALARM SYSTEM.
15. PROVIDE FIRE DEPARTMENT CONNECTION AS INDICATED.
16. ALL PIPING TO BE SCHEDULE 40 STEEL.

PLUMBING LEGEND

SYMBOL	DESCRIPTION		
———	SOIL, WASTE, OR SANITARY SEWER		BALL VALVE
—SS—	SANITARY SEWER (ON SITE)		PLUG COCK – GAS COCK
———	SANITARY VENT		PRESSURE REDUCING VALVE
—GW—	GREASE WASTE		STRAINER
—CWV—	COMBINATION WASTE AND VENT		UNION
—AW—	ACID WASTE	FD	FLOOR DRAIN
— —AV— —	ACID VENT	RD	ROOF DRAIN
—W—	WATER (ON SITE)	AD	ACCESS DOOR
—— - ——	COLD WATER	VTR	VENT THRU ROOF
—— - - ——	HOT WATER	HB	HOSE BIBB
—— - - - ——	HOT WATER RETURN	FWH	FREEZELESS WALL HYDRANT
—T—	TEMPERED WATER (105°F)	CO	CLEANOUT PLUG
—SD—	STORM DRAIN	FCO	FLOOR CLEANOUT
—D—	INDIRECT DRAIN	AFCO	FLOOR CLEANOUT WITH ACID RESISTANT PIPING AND FITTINGS
—OSD—	OVERFLOW STORM DRAIN	WCO	WALL CLEANOUT
—SPD—	SUMP PUMP DISCHARGE	ECO	EXTERIOR CLEANOUT
—G—	NATURAL GAS (LOW PRESSURE GAS)	R / 1	DENOTES – SANITARY VENT STACK THRU ROOF
—MPG—	NATURAL GAS (MEDIUM PRESSURE GAS)	RISER DIAGRAM / LOCATION SHEET # / RISER DIAGRAM NUMBER	RISER DESIGNATION
	FLOW DIRECTION		NEW CONNECTION TO EXISTING
	GATE VALVE		EXISTING PIPING TO BE REMOVED OR ABANDONED
	GLOBE VALVE	———	EXISTING PIPING TO REMAIN
	CHECK VALVE		CAP AND SEAL AIR OR WATER TIGHT
			TERMINATION POINT OF DEMOLITION

FIXTURE LEGEND

SYMBOL	DESCRIPTION
	NEW FIXTURE
	ROUGH IN AND FINAL CONNECT ONLY

AUTO FIRE SPRINKLER LEGEND: (THIS LEGEND FOR ALL SHEETS)

	SINGLE CROSSHATCHING DENOTES BOUNDARIES OF AREAS THAT REQUIRE AUTOMATIC FIRE SPRINKLER SYSTEM.
	DOUBLE CROSSHATCHING DENOTES BOUNDARIES OF AREAS THAT REQUIRE AUTOMATIC FIRE SPRINKLER SYSTEM, BUT WITH NOTED EXCEPTION, AND OR, ADDITION.

MEDICAL GAS LEGEND

SYMBOL	DESCRIPTION
	FLOW DIRECTION
—A—	MEDICAL COMPRESSED AIR
—V—	VACUUM
MG-1	(1) VACUUM WALL OUTLET, (1) AIR WALL OUTLET, (1) SLIDE BRACKET IN HEADWALL (SEE ELECT SPECIFICATIONS)
SVB-2	2 POSITION VALVE BOX (SEE PLUMBING SPECS)
LPA-2	LINE PRESSURE ALARM (2 GAS) (SEE PLUMBING SPECS)
	DENOTES RECESSED ZONE VALVE BOX (SEE PLUMBING SPECS)
	DENOTES RECESSED MEDICAL GAS ALARM (SEE PLUMBING SPECS)
	DENOTES RECESSED MEDICAL GAS SERVICE OUTLETS (SEE PLUMBING SPECS)

NOTE: SEE ELECTRICAL DWGS AND SPECIFICATIONS FOR MED GAS OUTLETS

PLUMBING GENERAL NOTES

1. THE CONTRACTOR SHALL, PRIOR TO THE START OF ANY WORK UNDER THIS CONTRACT, JOB SITE VERIFY SIZE, LOCATION, ETC. OF ANY EXISTING PIPING NOTED, SHOWN OR IMPLIED, TO WHICH NEW PIPING IS RELATED OR CONNECTED.
2. HOT AND COLD WATER SUPPLIES TO FIXTURES SHALL BE AS FOLLOWS, UNLESS SHOWN OR NOTED OTHER WISE.

WATER CLOSET	1"
URINAL	1"
LAVATORY	1/2"
SERVICE SINK	3/4"
ELECTRIC WATER COOLER	1/2"
SINK	1/2"
SHOWER	1/2"
FREEZE-PROOF WALL HYDRANT	3/4"
CLINICAL SINK	1-1/4" & 1/2"
ICE MACHINE	1/2"
SUPPLY AND DRAIN UNIT (WASHER BOX)	1/2"
HOSE BIBB	3/4"
EMERGENCY SHOWER EYEWASH	1 -1/4"

3. INSTALL WATER HAMMER ARRESTORS EQUAL TO ZURN "SHOKTROL" AT EACH QUICK CLOSING VALVE, AND AT EACH GROUP OF PLUMBING FIXTURES, AND AS NOTED ON DRAWINGS SIZED AS PER MANUFACTURERS RECOMMENDATIONS. (MUST BE ACCESSIBLE WHERE POSSIBLE, ABOVE CEILING IF NECESSARY)
4. ALL SUPPLIES TO FIXTURE SHALL BE PROVIDED WITH HIGH EAR COUPLING EQUAL TO MUELLER CO. No. C-100HE (1/2", 3/4" OR 1" SIZE) AT THE WALL (ANCHOR TO CROSS MEMBER SUPPORT) BEFORE PIPE ENTERS ROOM SPACE TO ASSURE NO PIPE MOVEMENT WITHIN WALL CAVITY.
5. ALL FLOOR DRAINS SHALL BE PROVIDED WITH DEEP SEAL TYPE TRAP WITH NOT LESS THAN FOUR INCH (4") WATER SEAL AND BE PROVIDED WITH TRAP PRIMER.
6. ALL VENTS THROUGH ROOF (V.T.R.) SHALL BE PROVIDED WITH 6# (24" X 24" SIZE) FLASHING. WHERE STANDING SEAM TYPE IS USED THE FLASHING SHALL BE IN ACCORDANCE WITH THE ROOFING MANUFACTURERS RECOMMENDATION AND AS DETAILED ON THE ARCHITECTURAL DRAWINGS. CLOSE COORDINATION WITH THE ROOFING CONTRACTOR SHALL BE MAINTAINED TO ASSURE THE VENT PENETRATION IS CENTERED WITHIN THE METAL ROOF PANELS. TYPICALLY FOR METAL OR OTHER SPECIAL MATERIAL, ROOFS – USE MANUFACTURED RUBBER BOOT WITH STAINLESS STEEL HARDWARE TYPE THAT IS ARCHITECT APPROVED AND MUST BE COMPATIBLE WITH ROOFING SYSTEM AND ROOF WARRANTY.
7. FLUSH VALVES SHALL BE MOUNTED SUCH THAT THE DIMENSION FROM FLUSH VALVE CENTERLINE TO FINISHED FLOOR SHALL BE 39". (DOES NOT APPLY TO ELECTRONIC FLUSH VALVES) WHERE HANDICAPPED GRAB BARS ARE INSTALLED ON BACK WALL AT CLOSET, FLUSH VALVE SHALL BE MOUNTED AT STANDARD HEIGHT. SEE SPECIFICATIONS AND WATER CLOSET DETAIL.
8. ⬡WHERE THIS SYMBOL OCCURS ON THE DRAWINGS, REFERENCE SHOULD BE MADE TO THE KEYED NOTES ON THAT SAME SHEET AND THE CORRESPONDING NUMBER OF THAT NOTE.
9. IN ALL AREAS SUBJECT TO FREEZING, WATER PIPING SHALL BE INSTALLED ON THE THERMAL SIDE OF THE INSULATION.
10. CLOSE COORDINATION AND COOPERATION SHALL BE MAINTAINED BETWEEN TRADES WITH REGARD TO PLUMBING, HVAC, FIRE PROTECTION AND ELECTRICAL PLANS.
11. PROVIDE CLEANOUT CLEARANCE IN ACCORDANCE WITH THE ARKANSAS STATE PLUMBING CODE, BUT DO NOT LOCATE IN FOOT TRAFFIC PATHWAYS. DO NOT LOCATE CLEANOUTS IN FLOORS WITH CARPET. (FIELD COORDINATE) LOCATE FLOOR CLEANOUT NEAR WALLS, IN JANITORS ROOM, STORAGE ROOM, ETC., DO NOT LOCATE NEAR DOORWAYS
12. ALL SANITARY SEWER PIPING ABOVE CEILINGS THAT RECEIVE HVAC CONDENSATE OR ICE MACHINE WASTE SHALL BE INSULATED WITH 1" THICK FIBERGLASS, IN THE HORIZONTAL RUN UNTIL IT REACHES A VERTICAL DROP.
13. PROVIDE FIRE STOPPING OR FIRE STOP SLEEVE DEVICES AT ALL RATED ASSEMBLIES – SEE ARCHITECTURAL SPECIFICATIONS AND ARCHITECTURAL DRAWINGS FOR DETAILS
14. TRAP PRIMERS– LOCATE TRAP PRIMERS REASONABLY CLOSE TO PLUMBING FIXTURE (10' TO 20')– DO NOT CONNECT TRAP PRIMER TO WATER LINE LARGER THAN 1 1/2" SIZE– TRY TO LOCATE TRAP PRIMER LOWER THAN PLUMBING FIXTURES. TRAP PRIMER SHALL TYPICALLY BE PRECISION PLUMBING PRODUCTS MODEL # P2-500.
15. COORDINATE EXACT LOCATIONS OF ALL PLUMBING PIPING WITH ARCHITECTURAL AND STRUCTURAL DRAWINGS
16. VERIFY WITH ARCHITECTURAL DRAWINGS FOR EXACT LOCATIONS OF ALL "ADA" PLUMBING FIXTURES
17. ALL JANITORS ROOMS SHALL HAVE FLOOR DRAINS

ASU
ARKANSAS STATE UNIVERSITY

DONALD W. REYNOLDS
CENTER FOR HEALTH SCIENCES
ARKANSAS STATE UNIVERSITY
JONESBORO, ARKANSAS

BRACKETT
KRENNERICH
architects

100 East Huntington, Suite D P.O. Box 1655 Jonesboro, Arkansas 72403-1655
870-932-0571 Fax 870-932-0975 www.bkarchits.com

Commission Number
12406

P100

Date: January 25, 2008

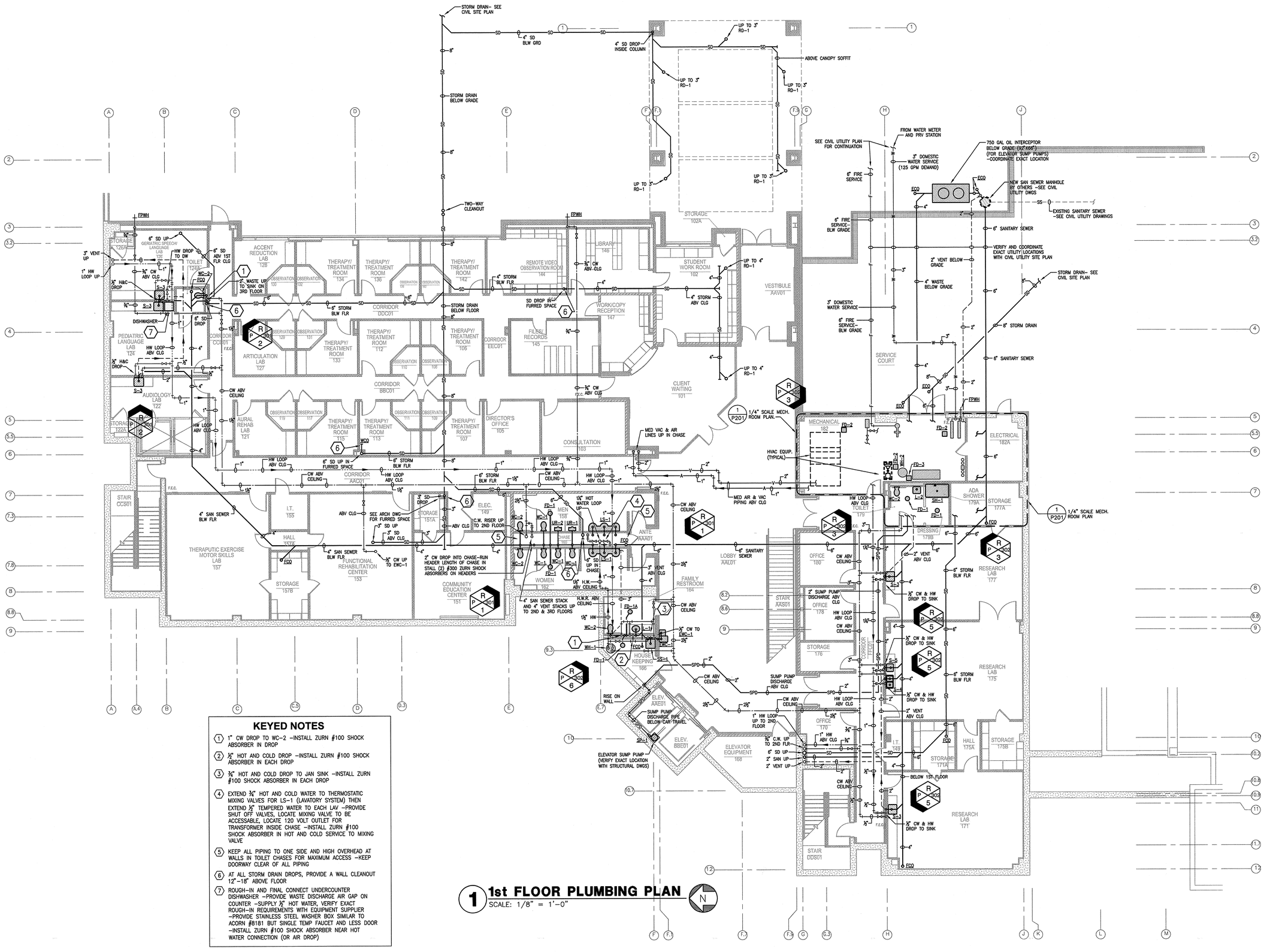

KEYED NOTES

1. 1" CW DROP TO WC-2 -INSTALL ZURN #100 SHOCK ABSORBER IN DROP
2. ½" HOT AND COLD DROP -INSTALL ZURN #100 SHOCK ABSORBER IN EACH DROP
3. ¾" HOT AND COLD DROP TO JAN SINK -INSTALL ZURN #100 SHOCK ABSORBER IN EACH DROP
4. EXTEND ¾" HOT AND COLD WATER TO THERMOSTATIC MIXING VALVES FOR LS-1 (LAVATORY SYSTEM) THEN EXTEND ½" TEMPERED WATER TO EACH LAV -PROVIDE SHUT OFF VALVES, LOCATE MIXING VALVE TO BE ACCESSABLE, LOCATE 120 VOLT OUTLET FOR TRANSFORMER INSIDE CHASE -INSTALL ZURN #100 SHOCK ABSORBER IN HOT AND COLD SERVICE TO MIXING VALVE
5. KEEP ALL PIPING TO ONE SIDE AND HIGH OVERHEAD AT WALLS IN TOILET CHASES FOR MAXIMUM ACCESS -KEEP DOORWAY CLEAR OF ALL PIPING
6. AT ALL STORM DRAIN DROPS, PROVIDE A WALL CLEANOUT 12"-18" ABOVE FLOOR
7. ROUGH-IN AND FINAL CONNECT UNDERCOUNTER DISHWASHER -PROVIDE WASTE DISCHARGE AIR GAP ON COUNTER -SUPPLY ½" HOT WATER, VERIFY EXACT ROUGH-IN REQUIREMENTS WITH EQUIPMENT SUPPLIER -PROVIDE STAINLESS STEEL WASHER BOX SIMILAR TO ACORN #8181 BUT SINGLE TEMP FAUCET AND LESS DOOR -INSTALL ZURN #100 SHOCK ABSORBER NEAR HOT WATER CONNECTION (OR AIR DROP)

1 1st FLOOR PLUMBING PLAN

SCALE: 1/8" = 1'-0"

ARKANSAS STATE UNIVERSITY

DONALD W. REYNOLDS CENTER FOR HEALTH SCIENCES

ARKANSAS STATE UNIVERSITY

JONESBORO, ARKANSAS

BRACKETT KRENNERICH architects

100 East Huntington, Suite D P.O. Box 1655 Jonesboro, Arkansas 72403-1655

870-932-0571 Fax 870-932-0875 www.bkarchs.com

Commission Number 12406

P101

Date: January 25, 2008

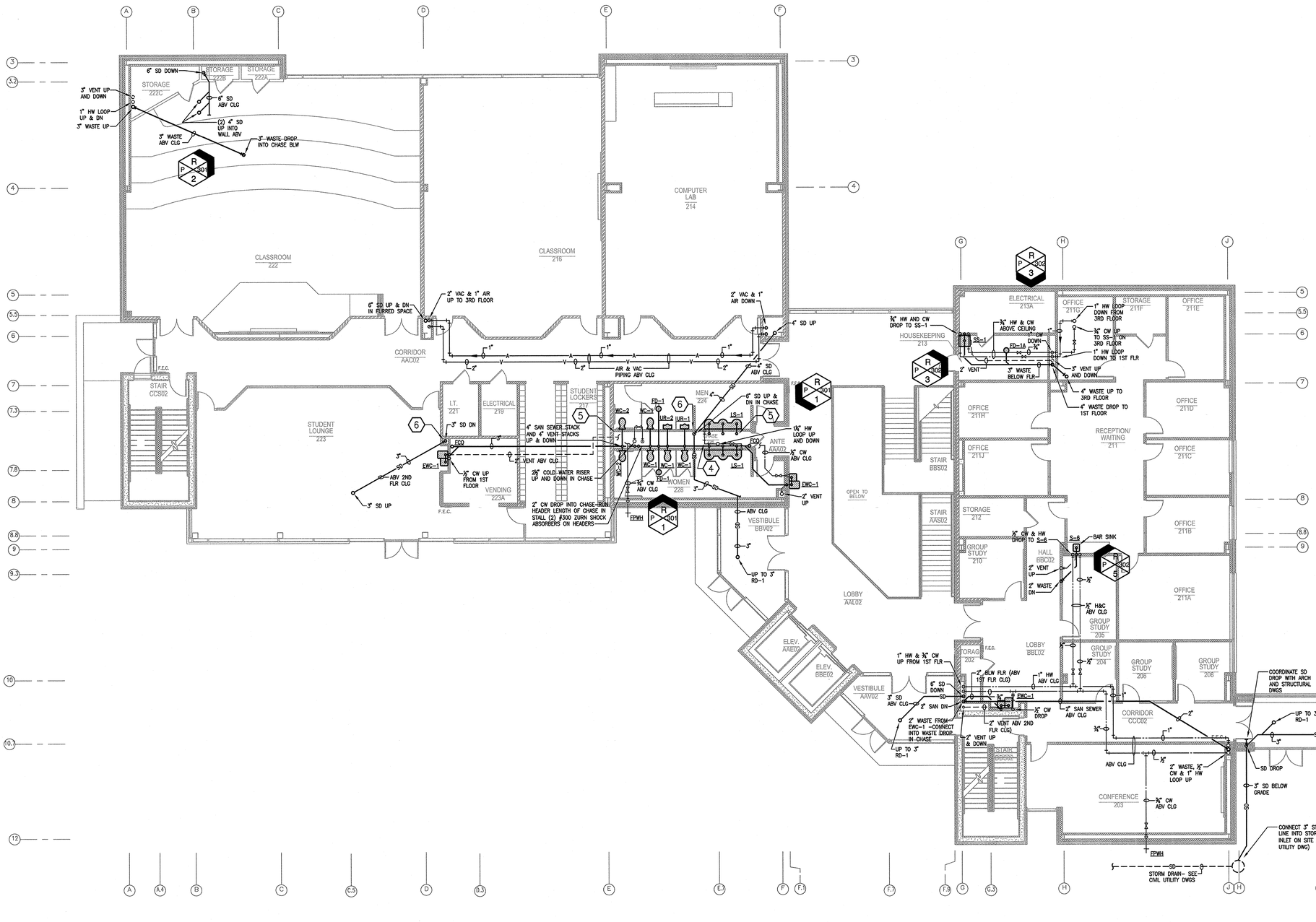

1 2nd FLOOR PLUMBING PLAN

SCALE: 1/8" = 1'-0"

KEYED NOTES

1. 1" CW DROP TO WC-2 -INSTALL ZURN #100 SHOCK ABSORBER IN DROP
2. ½" HOT AND COLD DROP -INSTALL ZURN #100 SHOCK ABSORBER IN EACH DROP
3. ¾" HOT AND COLD DROP TO JAN SINK -INSTALL ZURN #100 SHOCK ABSORBER IN EACH DROP
4. EXTEND ¾" HOT AND COLD WATER TO THERMOSTATIC MIXING VALVES FOR LS-1 (LAVATORY SYSTEM) THEN EXTEND ½" TEMPERED WATER TO EACH LAV -PROVIDE SHUT OFF VALVES, LOCATE MIXING VALVE TO BE ACCESSABLE, LOCATE 120 VOLT OUTLET FOR TRANSFORMER INSIDE CHASE -INSTALL ZURN #100 SHOCK ABSORBER IN HOT AND COLD SERVICE TO MIXING VALVE
5. KEEP ALL PIPING TO ONE SIDE AND HIGH OVERHEAD AT WALLS IN TOILET CHASES FOR MAXIMUM ACCESS -KEEP DOORWAY CLEAR OF ALL PIPING
6. AT ALL STORM DRAIN DROPS, PROVIDE A WALL CLEANOUT 12"-18" ABOVE FLOOR
7. ROUGH-IN AND FINAL CONNECT UNDERCOUNTER DISHWASHER -PROVIDE WASTE DISCHARGE AIR GAP ON COUNTER -SUPPLY ½" HOT WATER, VERIFY EXACT ROUGH-IN REQUIREMENTS WITH EQUIPMENT SUPPLIER -PROVIDE STAINLESS STEEL WASHER BOX SIMILAR TO ACORN #6181 BUT SINGLE TEMP FAUCET AND LESS DOOR -INSTALL ZURN #100 SHOCK ABSORBER NEAR HOT WATER CONNECTION (OR AIR DROP)

ARKANSAS STATE UNIVERSITY

DONALD W. REYNOLDS CENTER FOR HEALTH SCIENCES

ARKANSAS STATE UNIVERSITY

JONESBORO, ARKANSAS

BRACKETT KRENNERICH architects

100 East Huntington, Suite D P.O. Box 1655 Jonesboro, Arkansas 72403-1655

870-932-0571 Fax 870-932-0975 www.bkarchs.com

Commission Number 12406

P102

Date: January 25, 2008

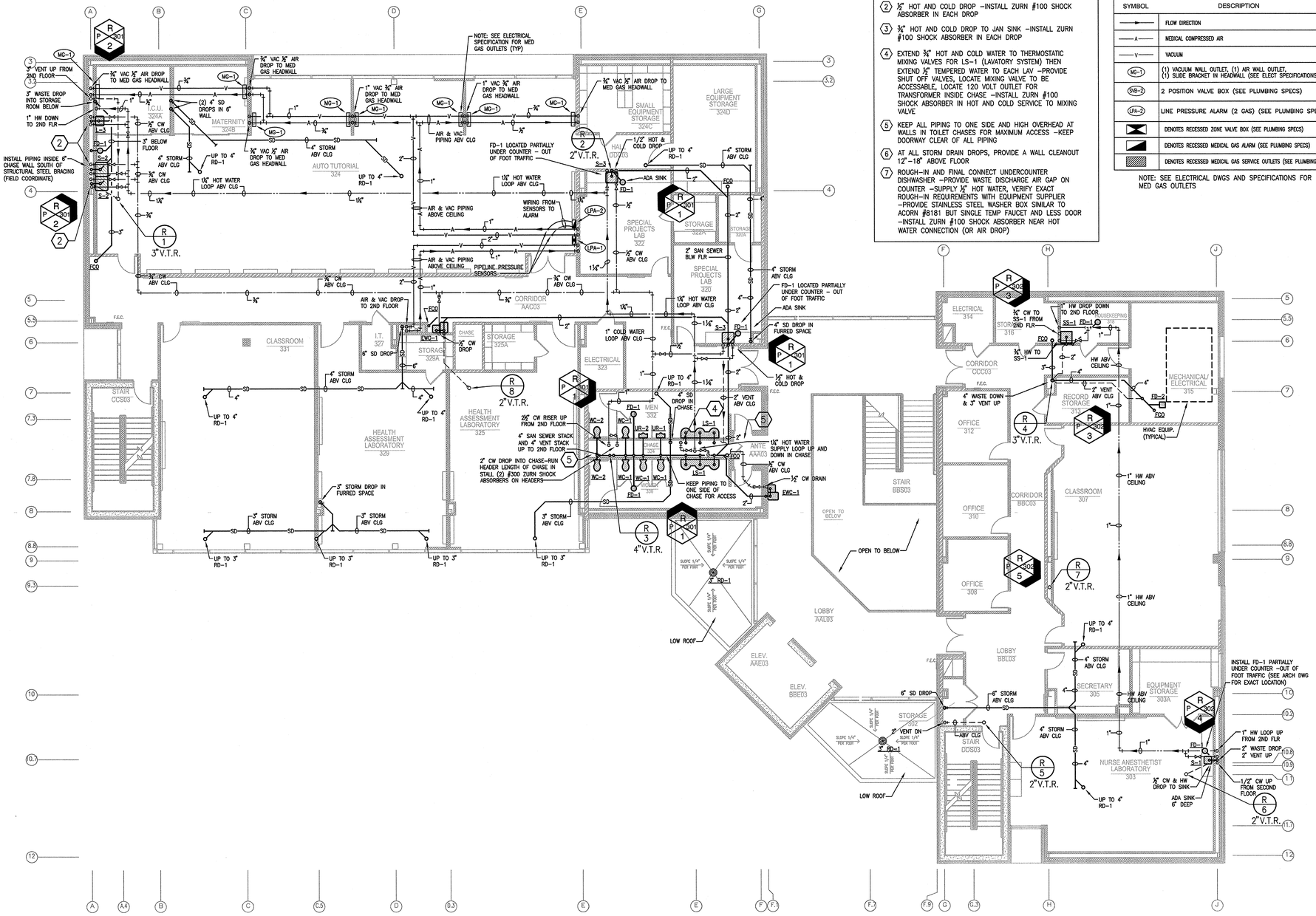

KEYED NOTES

1. 1" CW DROP TO WC-2 -INSTALL ZURN #100 SHOCK ABSORBER IN DROP
2. ½" HOT AND COLD DROP -INSTALL ZURN #100 SHOCK ABSORBER IN EACH DROP
3. ¾" HOT AND COLD DROP TO JAN SINK -INSTALL ZURN #100 SHOCK ABSORBER IN EACH DROP
4. EXTEND ¾" HOT AND COLD WATER TO THERMOSTATIC MIXING VALVES FOR LS-1 (LAVATORY SYSTEM) THEN EXTEND ½" TEMPERED WATER TO EACH LAV -PROVIDE SHUT OFF VALVES, LOCATE MIXING VALVE TO BE ACCESSABLE, LOCATE 120 VOLT OUTLET FOR TRANSFORMER INSIDE CHASE -INSTALL ZURN #100 SHOCK ABSORBER IN HOT AND COLD SERVICE TO MIXING VALVE
5. KEEP ALL PIPING TO ONE SIDE AND HIGH OVERHEAD AT WALLS IN TOILET CHASES FOR MAXIMUM ACCESS -KEEP DOORWAY CLEAR OF ALL PIPING
6. AT ALL STORM DRAIN DROPS, PROVIDE A WALL CLEANOUT 12"-18" ABOVE FLOOR
7. ROUGH-IN AND FINAL CONNECT UNDERCOUNTER DISHWASHER -PROVIDE WASTE DISCHARGE AIR GAP ON COUNTER -SUPPLY ½" HOT WATER, VERIFY EXACT ROUGH-IN REQUIREMENTS WITH EQUIPMENT SUPPLIER -PROVIDE STAINLESS STEEL WASHER BOX SIMILAR TO ACORN #8181 BUT SINGLE TEMP FAUCET AND LESS DOOR -INSTALL ZURN #100 SHOCK ABSORBER NEAR HOT WATER CONNECTION (OR AIR DROP)

MEDICAL GAS LEGEND

SYMBOL	DESCRIPTION
	FLOW DIRECTION
—A—	MEDICAL COMPRESSED AIR
—V—	VACUUM
MG-1	(1) VACUUM WALL OUTLET, (1) AIR WALL OUTLET, (1) SLIDE BRACKET IN HEADWALL (SEE ELECT SPECIFICATIONS)
SVB-2	2 POSITION VALVE BOX (SEE PLUMBING SPECS)
LPA-2	LINE PRESSURE ALARM (2 GAS) (SEE PLUMBING SPECS)
	DENOTES RECESSED ZONE VALVE BOX (SEE PLUMBING SPECS)
	DENOTES RECESSED MEDICAL GAS ALARM (SEE PLUMBING SPECS)
	DENOTES RECESSED MEDICAL GAS SERVICE OUTLETS (SEE PLUMBING SPECS)

NOTE: SEE ELECTRICAL DWGS AND SPECIFICATIONS FOR MED GAS OUTLETS

1 3rd FLOOR PLUMBING PLAN

SCALE: 1/8" = 1'-0"

ARKANSAS STATE UNIVERSITY

DONALD W. REYNOLDS CENTER FOR HEALTH SCIENCES

ARKANSAS STATE UNIVERSITY
JONESBORO, ARKANSAS

BRACKETT KRENNERICH architects
100 East Huntington, Suite D P.O. Box 1655 Jonesboro, Arkansas 72403-1655
870-932-0571 Fax 870-932-0975 www.bkarchts.com

Commission Number 12406

P103

Date: January 25, 2008

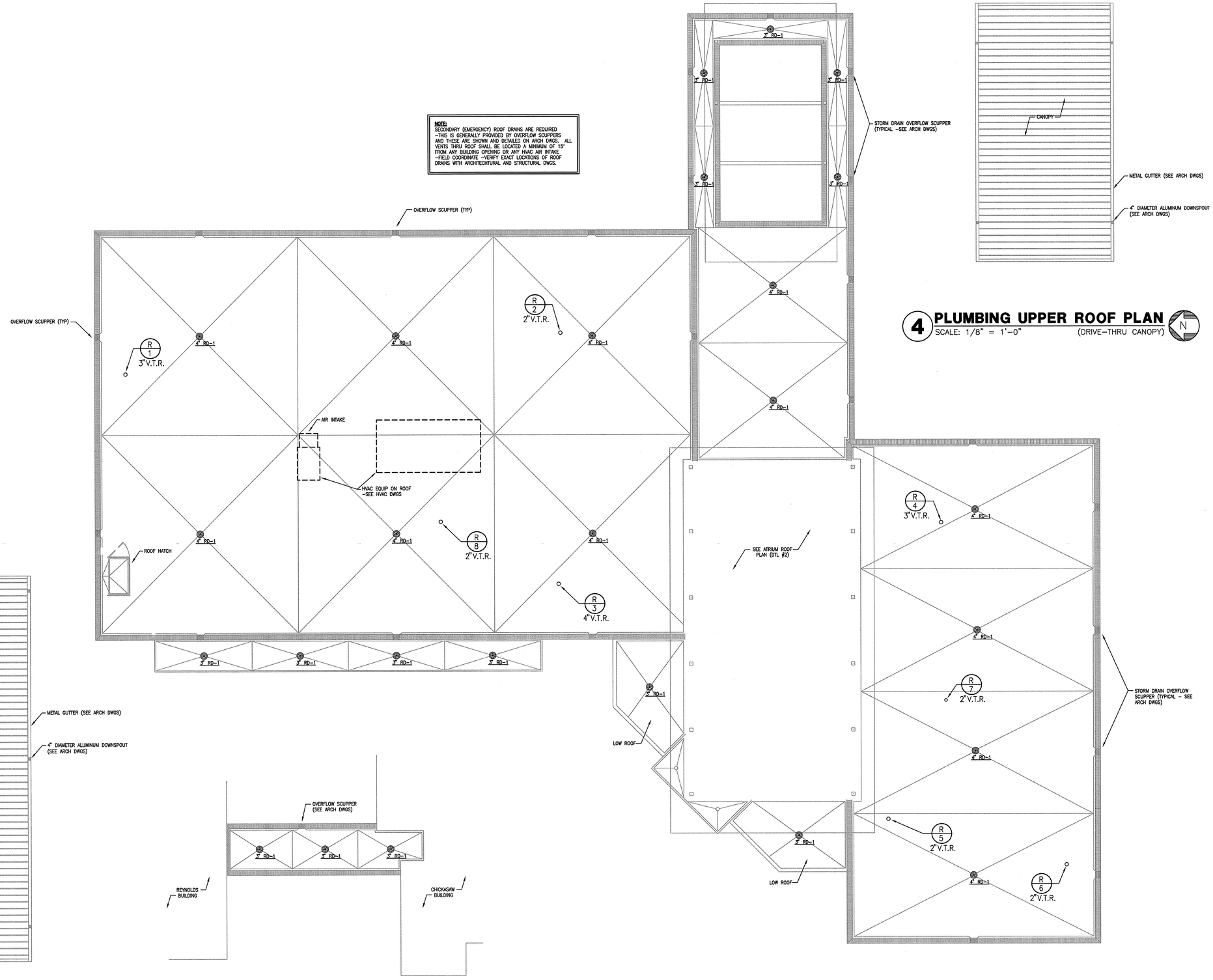

4 PLUMBING UPPER ROOF PLAN
SCALE: 1/8" = 1'-0" (DRIVE-THRU CANOPY)

2 PLUMBING UPPER ROOF PLAN
SCALE: 1/8" = 1'-0" (ATRIUM ROOF)

3 PLUMBING LOWER ROOF PLAN
SCALE: 1/8" = 1'-0" (WALKWAY ROOF)

1 PLUMBING ROOF PLAN
SCALE: 1/8" = 1'-0"

ARKANSAS STATE UNIVERSITY

DONALD W. REYNOLDS CENTER FOR HEALTH SCIENCES

ARKANSAS STATE UNIVERSITY
JONESBORO, ARKANSAS

BRACKETT KRENNERICH architects
100 East Huntington, Suite D P.O. Box 1655 Jonesboro, Arkansas 72403-1655
870-932-0571 Fax 870-932-0975 www.bkarchits.com

Commission Number 12406

P104

Date: January 25, 2008

MECH. RM. 182 - PLUMBING KEYED NOTES:

1. ½" HOT AND COLD WATER DROP TO SHOWER –INSTALL ZURN #100 SHOCK ABSORBER IN EACH DROP
2. ½" HOT AND COLD WATER DROP TO LAV
3. 1" COLD WATER DROP TO WATER CLOSET –INSTALL ZURN #100 SHOCK ABSORBER IN DROP
4. 2" SUMP PUMP DISCHARGE ABOVE CEILING
5. 2" SUMP PUMP DISCHARGE DROP DOWN ON WALL AND DISCHARGE INTO FLOOR DRAIN, THE FLOOR DRAIN SHALL BE VENTED AND HAVE TRAP PRIMER, EXTEND DRAIN LINE FROM FD TO OIL INTERCEPTOR (THIS IS FOR ELEVATOR SUMP PUMP)
6. MED VACUUM PUMP CONTROL PANEL –FIELD COORDINATE TO PROVIDE 36" MINIMUM WORKING SPACE IN FRONT OF PANEL.
7. ¾" HOT WATER RETURN LOOP DROPS DOWN FROM 2ND FLOOR
8. ¾" HWR DROPS DOWN TO WATER HEATER
9. 1¼" COLD WATER AND 1¼" HOT WATER CONNECTS TO WH–2 (WATER HEATER) –FIELD VERIFY EXACT LOCATION FOR EXPANSION TANK
10. 1" COLD WATER UP TO JAN SINKS ON FLOORS ABOVE
11. HVAC PUMP EQUIP –SEE HVAC DWGS –COORDINATE EXACT LOCATIONS OF HVAC AND PLUMBING EQUIPMENT TO ENSURE PROPER OPERATION AND HAVE ADEQUATE MAINTENANCE ACCESS
12. MED VACUUM PUMP –FIELD COORDINATE EXACT LOCATION –PROVIDE REQUIRED WORKING CLEARANCES
13. MED GAS COMPRESSED AIR CYLINDER MANIFOLD –FIELD COORDINATE EXACT LOCATION TO ENSURE WORKING CLEARANCES TO REMOVE AND INSTALL NEW AIR CYLINDERS AND TO STORE REQUIRED SPARE CYLINDERS
14. MED GAS "MASTER" ALARM –THE AIR MANIFOLD AND VACUUM PUMP PRESSURE SWITCHES ETC. ARE CONNECTED TO THIS PANEL –THIS PANEL SHALL CONNECT TO CAMPUS EMS TO REPORT ABNORMAL PRESSURES FOR VACUUM AND AIR SYSTEMS (SEE SPECIFICATIONS)
15. PIPING HIGH OVERHEAD –AT CLG STRUCTURE (FIELD COORDINATE)

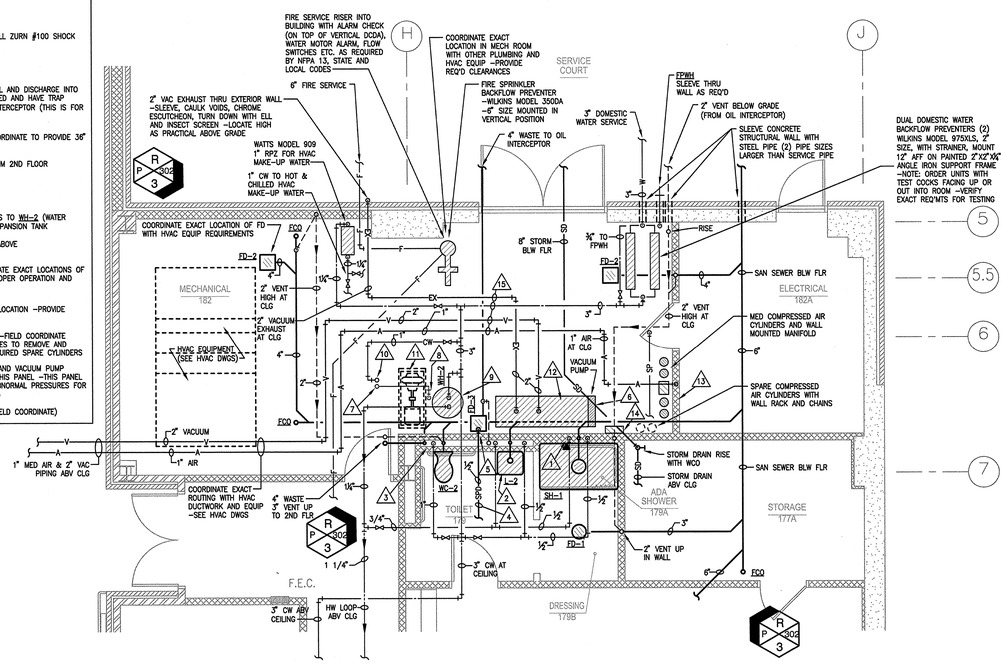

1 MECHANICAL ROOM 182 PLAN

SCALE: 1/4" = 1'–0"

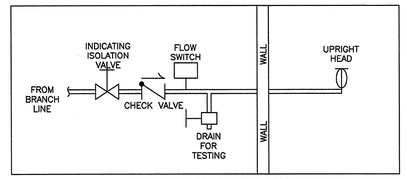

ELEVATOR MACHINE ROOM

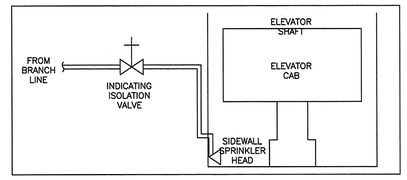

ELEVATOR PIT

2 ELEVATOR AND MACHINE ROOM SPRINKLER DETAILS

SCALE: NONE

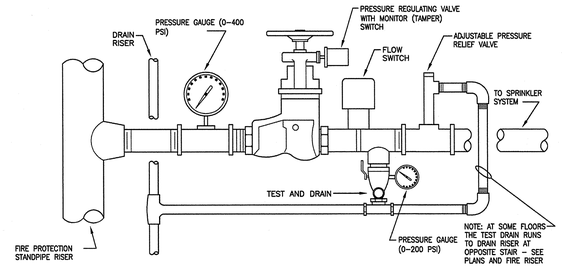

3 TYPICAL FIRE SPRINKLER FLOOR CONTROL VALVE DETAIL

SCALE: NONE

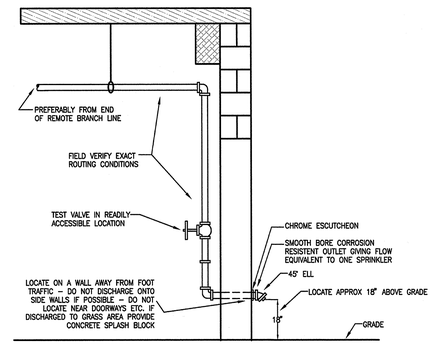

NOTE: NOT LESS THAN 4 FT. OF EXPOSED TEST PIPE IN WARM ROOM BEYOND VALVE WHERE PIPE EXTENDS THRU WALL TO OUTSIDE. (TO PREVENT FREEZING)

4 FIRE SPRINKLER TEST DRAIN DETAIL

SCALE: NONE

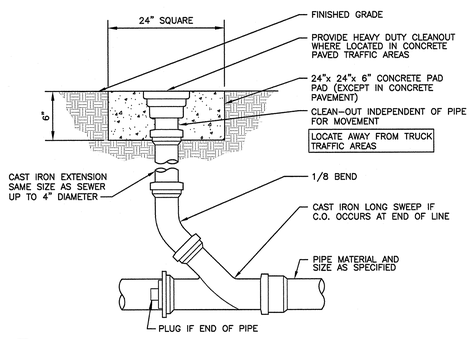

5 EXTERIOR CLEAN-OUT (ECO)

SCALE: NONE

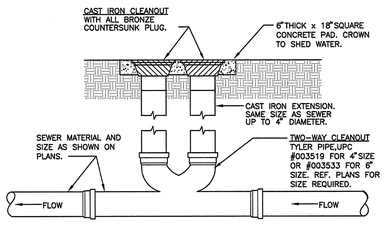

6 TWO-WAY CLEANOUT TO GRADE DETAIL

SCALE: NONE

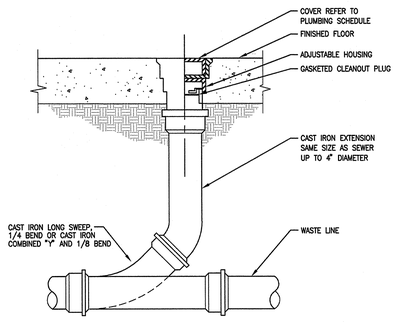

7 FLOOR CLEAN-OUT (FCO)

SCALE: NONE

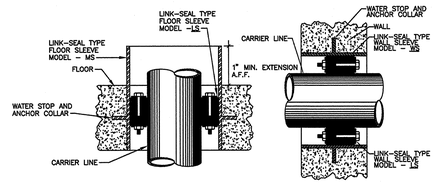

8 WATERPROOF SLEEVE DETAIL

SCALE: NONE (TYPICAL FOR ALL PIPE PENETRATIONS THROUGH GROUND FLOOR SLABS AND WALLS THAT ARE BELOW GRADE)

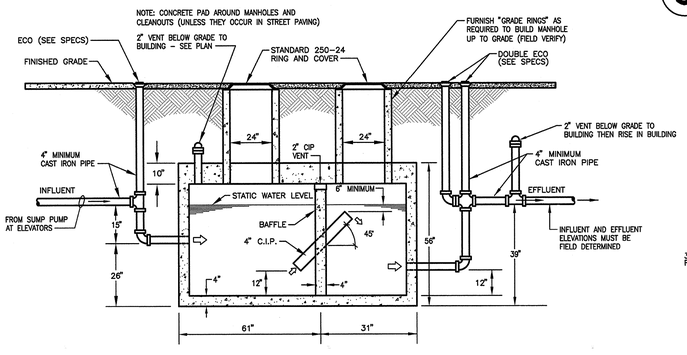

9 OIL INTERCEPTOR DETAIL

SCALE: NTS

NOTE:
1. FURNISH 750 GALLON CONCRETE OIL INTERCEPTOR WITH CAST IRON MANHOLES FRAMES AND COVERS, EQUAL TO THAT MANUFACTURED BY PETERSON CONCRETE TANK COMPANY OF NORTH LITTLE ROCK, ARKANSAS.
2. OUTSIDE TANK DIMENSIONS SHALL BE 92"L x 66"W x 56"H (WITH 10" LID)
3. GREASE TRAP SIZE AND DESIGN MUST COMPLY WITH LOCAL WASTE WATER UTILITY

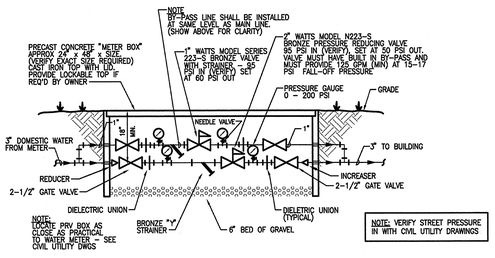

10 PRESSURE REDUCING VALVE ASSEMBLY

SCALE: NONE

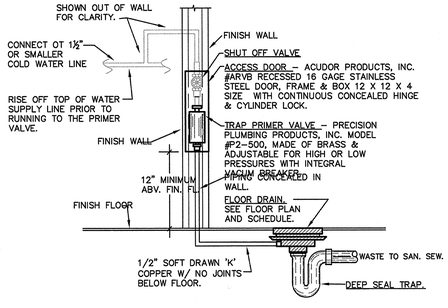

11 TRAP PRIMER DETAIL

SCALE: NONE (FOR CONCEALED LOCATIONS)

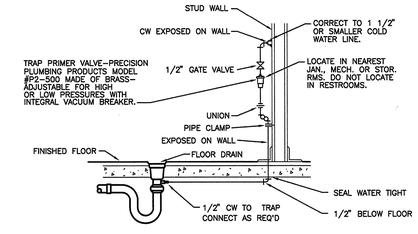

12 TRAP PRIMER TO FLOOR DRAIN

SCALE: NONE (FOR EXPOSED LOCATIONS)

ASU ARKANSAS STATE UNIVERSITY

DONALD W. REYNOLDS CENTER FOR HEALTH SCIENCES

ARKANSAS STATE UNIVERSITY

JONESBORO, ARKANSAS

BRACKETT KRENNERICH architects

100 East Huntington, Suite D P.O. Box 1655 Jonesboro, Arkansas 72403-1655

870-932-0571 Fax:870-932-0975 www.bkarchs.com

Commission Number 12406

P201

Date: January 25, 2008

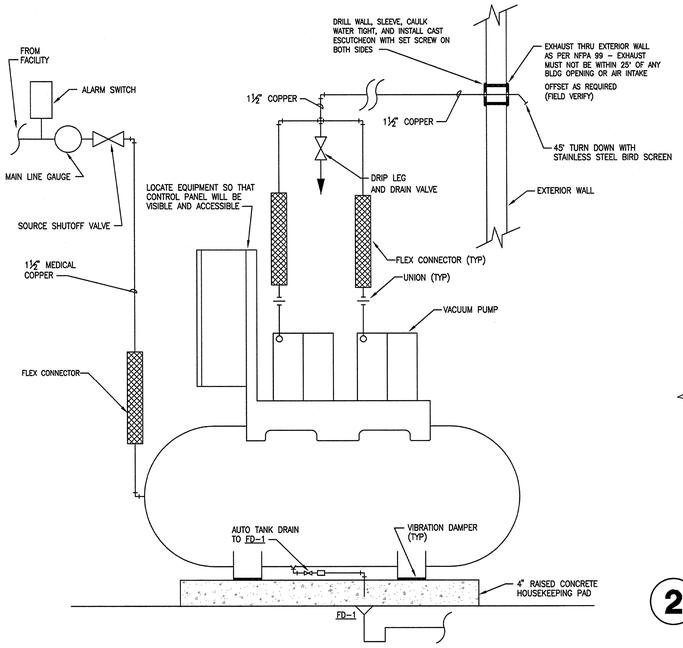

1 MEDICAL VACUUM PUMP DETAIL
SCALE: NONE

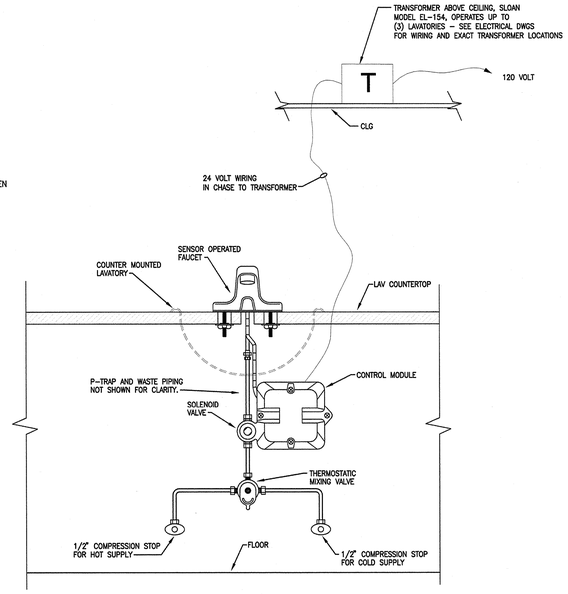

2 SECTION AT LAVATORY COUNTER AND SENSOR OPERATED FAUCET - TYPICAL
SCALE: N.T.S.

NOTES: 1. WALL MOUNTED LAVATORY CONNECTION SIMILAR.
2. AT COUNTER LAVS– COORDINATE WITH ARCHITECTURAL MILLWORK FOR ACCESS PANEL TO EQUIPMENT BELOW COUNTER.

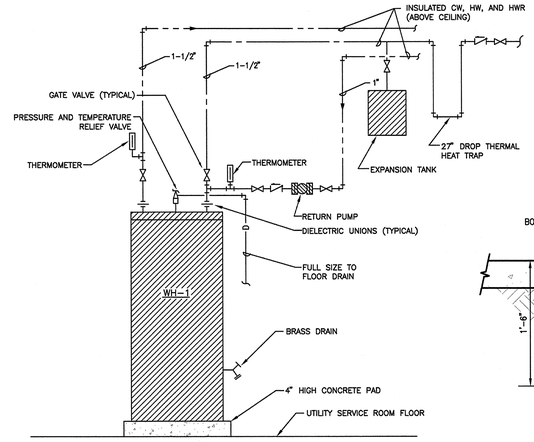

3 (WH-1) WATER HEATER DETAIL AT HOUSEKEEPING 166
SCALE: NONE (WH-2 DETAIL SIMILAR AT MECH 182)

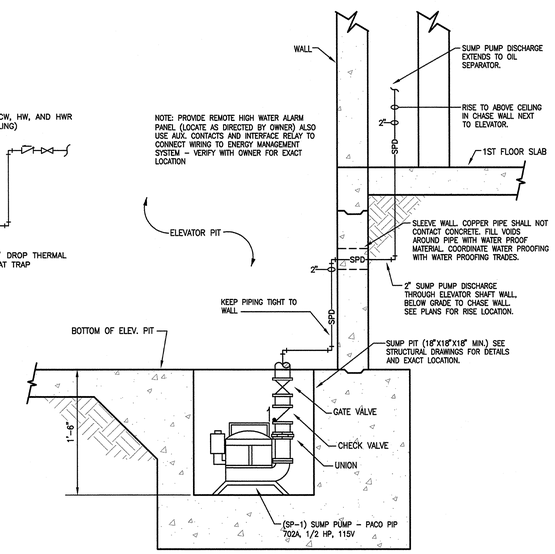

4 SUMP PUMP (SP-1) AT HYDRAULIC ELEVATOR
SCALE: NTS

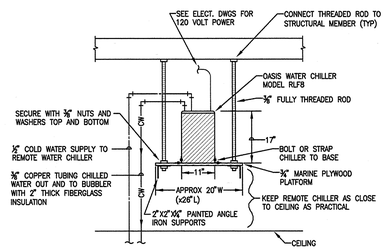

5 REMOTE WATER CHILLER FOR DRINKING FOUNTAIN BUBBLERS
SCALE: NONE LOCATE ABOVE LAY-IN CEILING –KEEP CHILLED WATER PIPING LENGTH BETWEEN CHILLER AND BUBBLER 6'–10" (MAX)

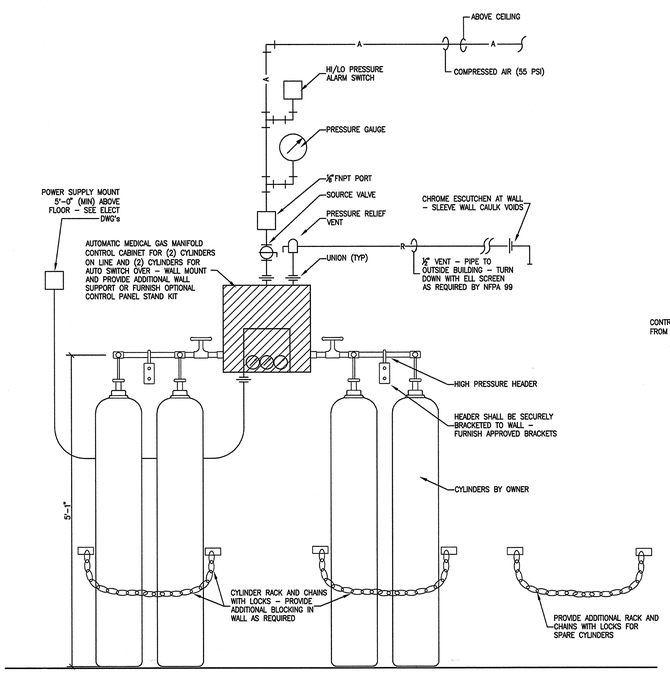

6 COMPRESSED AIR MEDICAL GAS MANIFOLD DETAIL
SCALE: NONE

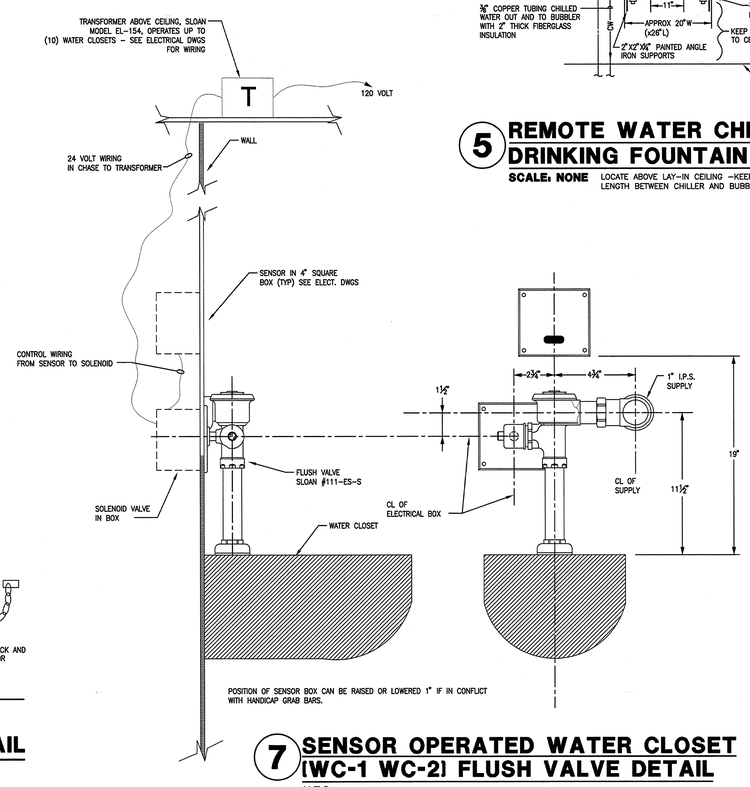

7 SENSOR OPERATED WATER CLOSET (WC-1 WC-2) FLUSH VALVE DETAIL
N.T.S.

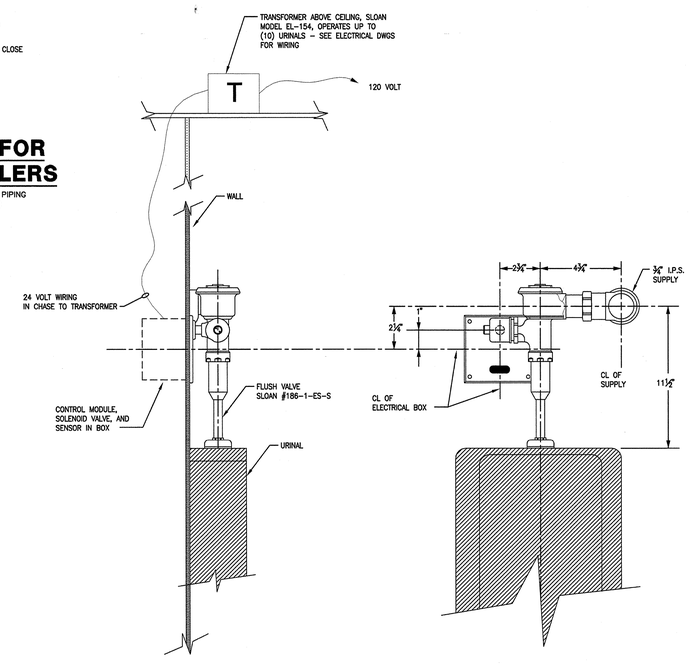

8 SENSOR OPERATED URINAL (UR-1 UR-2) FLUSH VALVE DETAIL
SCALE: NTS

ASU ARKANSAS STATE UNIVERSITY

DONALD W. REYNOLDS CENTER FOR HEALTH SCIENCES
ARKANSAS STATE UNIVERSITY
JONESBORO, ARKANSAS

BRACKETT KRENNERICH architects
100 East Huntington, Suite D P.O. Box 1655 Jonesboro, Arkansas 72403-1655
870-932-0571 Fax:870-932-0875 www.bkarchts.com

Commission Number 12406
P202
Date: January 25, 2008

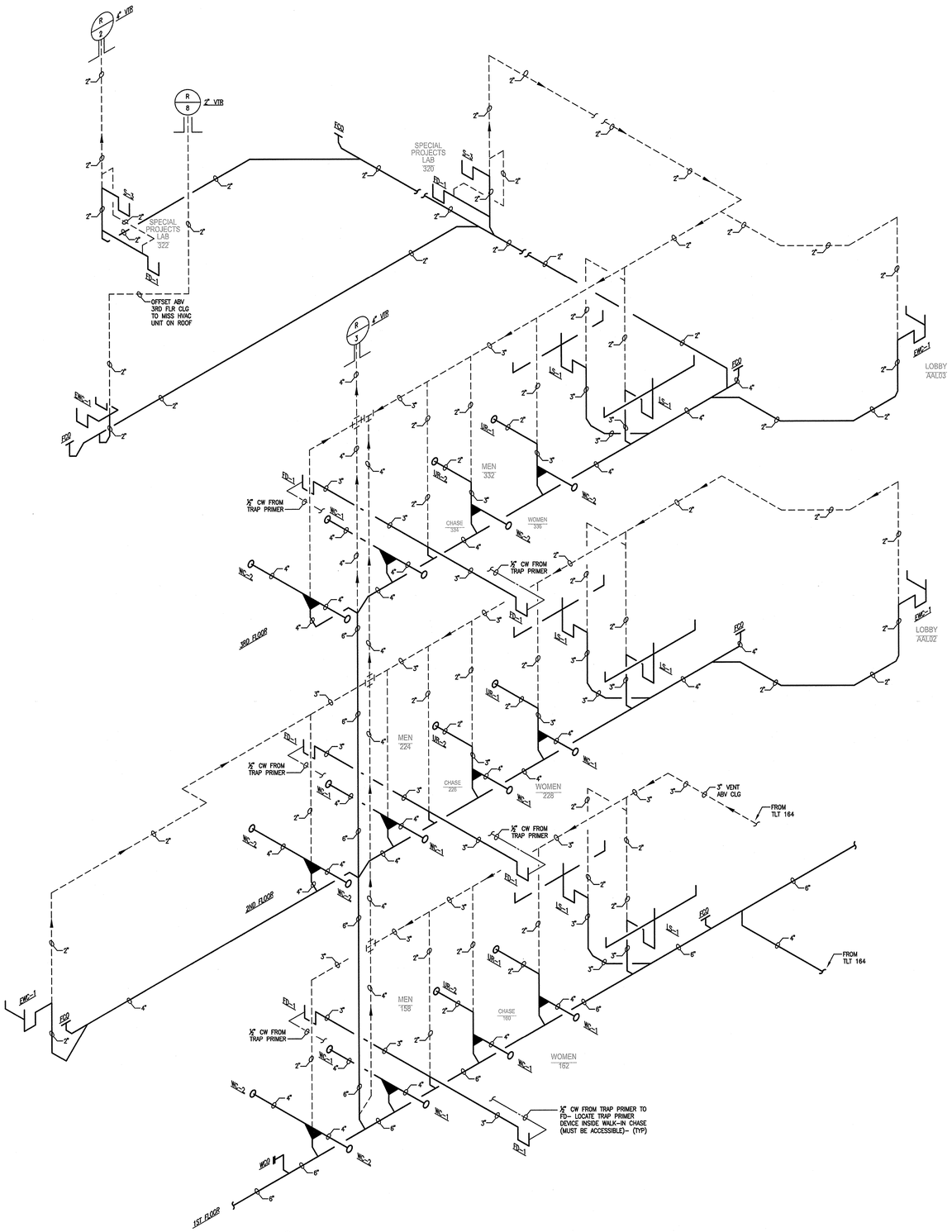

R 1

WASTE AND VENT RISER AT MEN TLT 158, WOMEN 162, MEN TLT 224, WOMEN 228, MEN TLT 332, WOMEN 336, SPECIAL PROJECT LAB 322, & LAB 320

SCALE: NONE

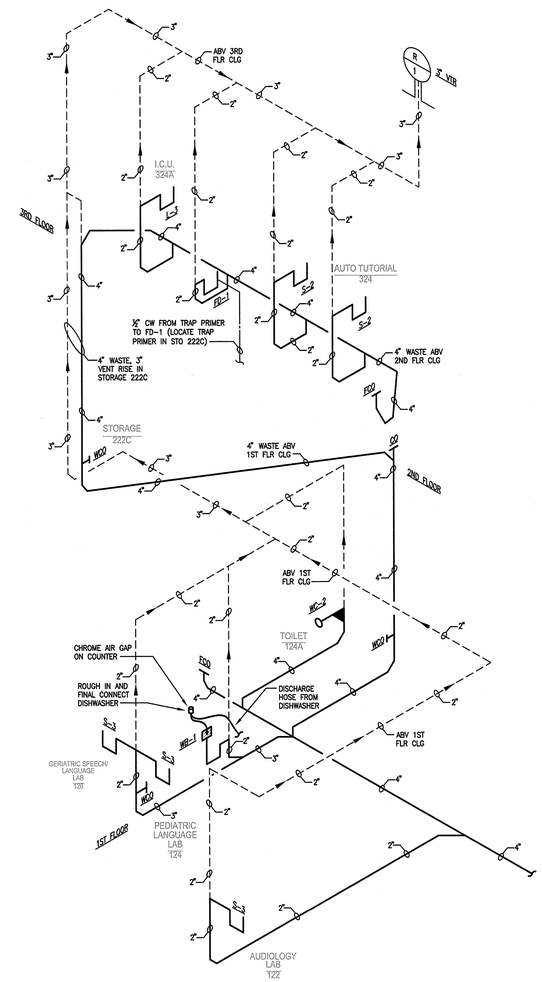

R 2

WASTE AND VENT RISER AT LAB 122, 124, 126, STORAGE 222C, AUTO TUTORIAL 324, & I.C.U 324A

SCALE: NONE

ARKANSAS STATE UNIVERSITY

DONALD W. REYNOLDS CENTER FOR HEALTH SCIENCES

ARKANSAS STATE UNIVERSITY

JONESBORO, ARKANSAS

BRACKETT KRENNERICH architects

100 East Huntington, Suite D P.O. Box 1655 Jonesboro, Arkansas 72403-1655

870-932-0571 Fax:870-932-0975 www.bkarchs.com

Commission Number 12406

P301

Date: January 25, 2008

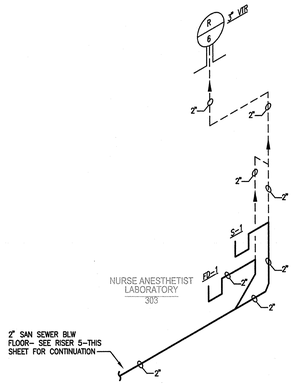

R 4 **WASTE AND VENT RISER AT NURSE ANESTHETIST LABORATORY 303**
SCALE: NONE

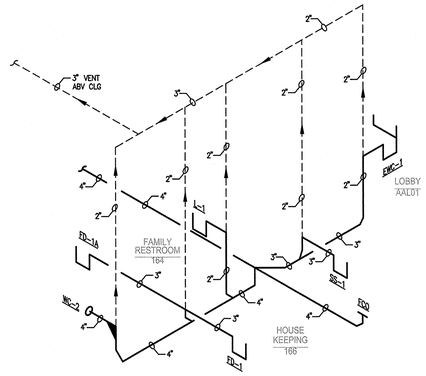

R 6 **WASTE AND VENT RISER AT FAMILY TLT 164, HOUSEKEEPING 164, AND LOBBY AALO1**
SCALE: NONE

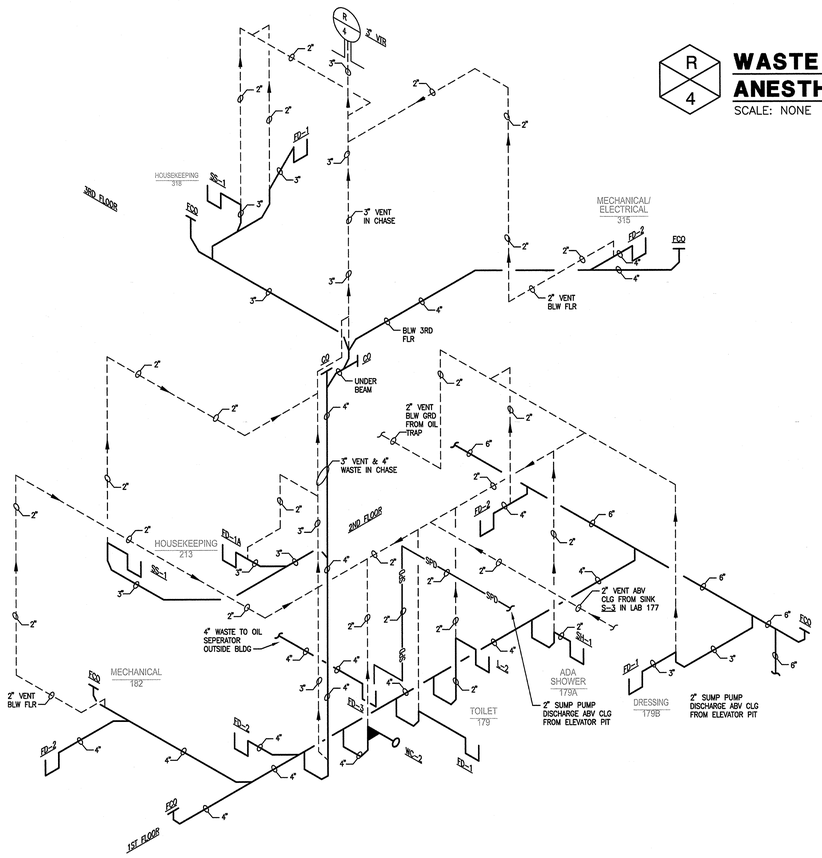

R 3 **WASTE AND VENT RISER AT 1ST FLOOR TLT 179, MECH 182, 2ND FLR HOUSKEEPING 213, & 3RD FLR HOUSEKEEPING 318, MECH 315**
SCALE: NONE

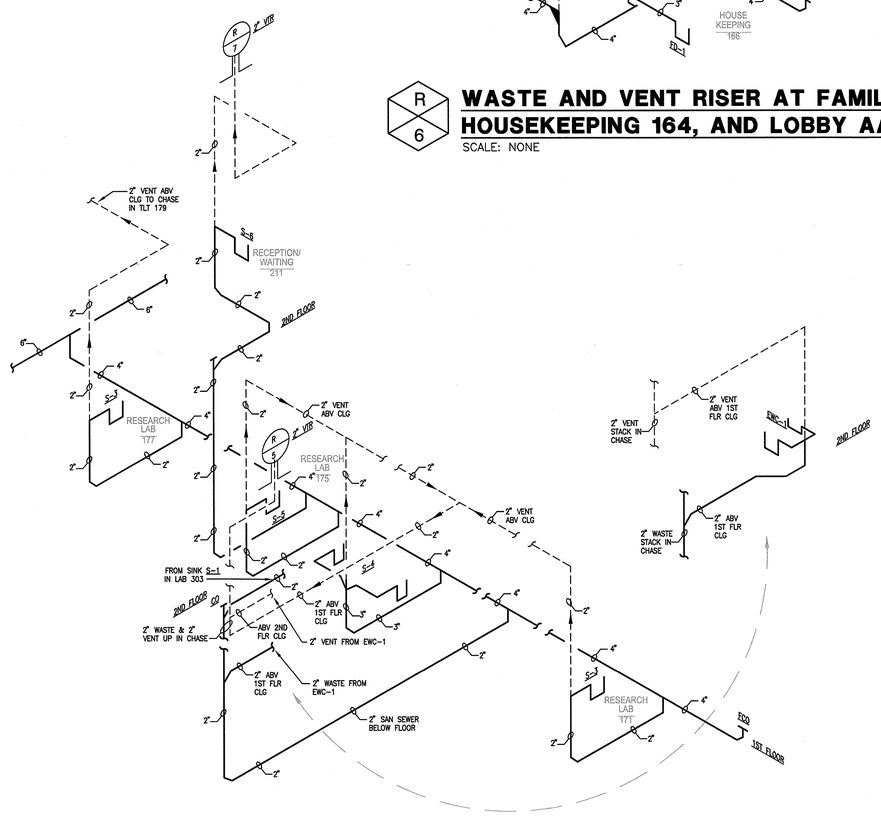

R 5 **WASTE AND VENT RISER AT RECEPTION 211 RESEARCH LAB 171, LAB 175, & LAB 177**
SCALE: NONE

ARKANSAS STATE UNIVERSITY

DONALD W. REYNOLDS CENTER FOR HEALTH SCIENCES

ARKANSAS STATE UNIVERSITY
JONESBORO, ARKANSAS

BRACKETT KRENNERICH architects
100 East Huntington, Suite D P.O. Box 1655 Jonesboro, Arkansas 72403-1655
870-932-0571 Fax 870-932-0975 www.bkarchts.com

Commission Number 12406
P302
Date: January 25, 2008

FIRE PROTECTION KEYED NOTES:

1. THE ENTIRE BUILDING SHALL BE PROVIDED WITH AN AUTOMATIC FIRE SPRINKLER SYSTEM. SINGLE CROSSHATCHING DENOTES BOUNDARIES OF STANDARD WET SYSTEM. SEE GENERAL FIRE PROTECTION NOTES AND OTHER KEYED NOTES FOR SPECIAL AREA REQUIREMENTS.
2. PROVIDE SPRINKLER HEADS AT TOP OF ELEVATOR SHAFT AND HEADS BELOW LOWEST POINT OF ELEVATOR CAR TRAVEL AND ELEVATOR MACHINE ROOMS. HEADS SHALL BE SPECIAL HIGH TEMPERATURE TYPE (200 F TEMP. OR ABOVE RANGE) NOTE THAT 135 HEAT DETECTORS AND SMOKE DETECTORS THAT SHUT DOWN ELEVATOR ARE SHOWN ON ELECTRICAL DRAWINGS PROVIDE SEPARATE OS&Y VALVES WITH FLOW AND TAMPER SWITCHES FOR THESE HEADS – WIRE BACK TO FIRE ALARM PANEL FOR ELEVATOR SHUT DOWN.
3. PROVIDE SPRINKLER HEADS AT TOP AND BOTTOM FLOORS OF ALL LARGE MECHANICAL CHASES (AS REQUIRED BY CODE)
4. THESE AREAS REQUIRE SPRINKLER HEADS AT TOP OF STAIR AND UNDER LOWEST STAIR LANDING PROVIDE PROTECTIVE WIRE CAGE ON SPRINKLER HEADS.
5. FIRE SPRINKLER HEADS AROUND ELECTRICAL PANELS (SEE ARCHITECTURAL AND ELECTRICAL DRAWINGS FOR EXACT LOCATIONS) SHALL HAVE DEFLECTOR SHIELDS TO AVOID DIRECT WATER SPRAY ON EQUIPMENT.
6. IN MECHANICAL AND ELECTRICAL ROOMS (ESPECIALLY ROOMS WITHOUT CEILINGS) COORDINATE CAREFULLY THE EXACT LOCATIONS OF HEADS. REVIEW MECHANICAL AND ELECTRICAL DRAWINGS TO ENSURE THAT HEADS ARE NOT INSTALLED DIRECTLY ABOVE DUCTWORK, EQUIPMENT, ETC.
7. THESE AREAS ARE ORDINARY HAZARD OCCUPANCY (ALL OTHER AREAS ARE LIGHT HAZARD OCCUPANCY UNLESS OTHERWISE NOTED)
8. STAIRS AT ATRIUM– THESE AREAS REQUIRE SPRINKLER HEADS AT TOP OF STAIR AND UNDER LOWEST STAIR LANDING

AUTO FIRE SPRINKLER LEGEND: (THIS LEGEND FOR ALL SHEETS)

SINGLE CROSSHATCHING DENOTES BOUNDARIES OF AREAS THAT REQUIRE AUTOMATIC FIRE SPRINKLER SYSTEM.

DOUBLE CROSSHATCHING DENOTES BOUNDARIES OF AREAS THAT REQUIRE AUTOMATIC FIRE SPRINKLER SYSTEM, BUT WITH NOTED EXCEPTION, AND OR, ADDITION.

NOTE:
SEE SHEET P1.00 FOR FIRE PROTECTION GENERAL NOTES

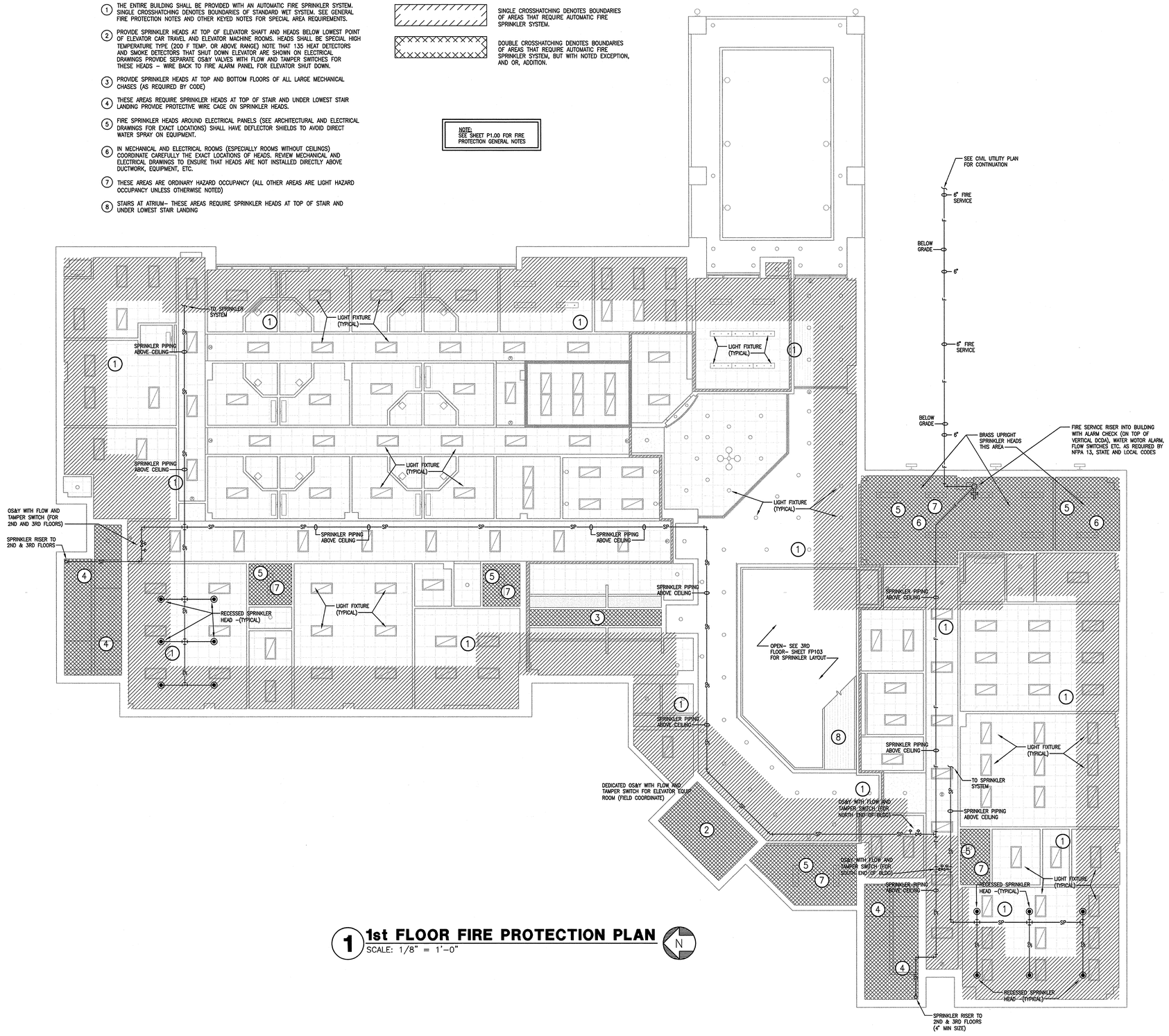

1 1st FLOOR FIRE PROTECTION PLAN

SCALE: 1/8" = 1'–0"

ARKANSAS STATE UNIVERSITY

DONALD W. REYNOLDS CENTER FOR HEALTH SCIENCES

ARKANSAS STATE UNIVERSITY

JONESBORO, ARKANSAS

BRACKETT KRENNERICH architects

100 East Huntington, Suite D P.O. Box 1655 Jonesboro, Arkansas 72403-1655

870-932-0571 Fax 870-932-0975 www.bkarchits.com

Commission Number 12406

FP101

Date: January 25, 2008

FIRE PROTECTION KEYED NOTES:

1. THE ENTIRE BUILDING SHALL BE PROVIDED WITH AN AUTOMATIC FIRE SPRINKLER SYSTEM. SINGLE CROSSHATCHING DENOTES BOUNDARIES OF STANDARD WET SYSTEM. SEE GENERAL FIRE PROTECTION NOTES AND OTHER KEYED NOTES FOR SPECIAL AREA REQUIREMENTS.
2. PROVIDE SPRINKLER HEADS AT TOP OF ELEVATOR SHAFT AND HEADS BELOW LOWEST POINT OF ELEVATOR CAR TRAVEL AND ELEVATOR MACHINE ROOMS. HEADS SHALL BE SPECIAL HIGH TEMPERATURE TYPE (200 F TEMP. OR ABOVE RANGE) NOTE THAT 135 HEAT DETECTORS AND SMOKE DETECTORS THAT SHUT DOWN ELEVATOR ARE SHOWN ON ELECTRICAL DRAWINGS PROVIDE SEPARATE OS&Y VALVES WITH FLOW AND TAMPER SWITCHES FOR THESE HEADS – WIRE BACK TO FIRE ALARM PANEL FOR ELEVATOR SHUT DOWN.
3. PROVIDE SPRINKLER HEADS AT TOP AND BOTTOM FLOORS OF ALL LARGE MECHANICAL CHASES (AS REQUIRED BY CODE)
4. THESE AREAS REQUIRE SPRINKLER HEADS AT TOP OF STAIR AND UNDER LOWEST STAIR LANDING PROVIDE PROTECTIVE WIRE CAGE ON SPRINKLER HEADS.
5. FIRE SPRINKLER HEADS AROUND ELECTRICAL PANELS (SEE ARCHITECTURAL AND ELECTRICAL DRAWINGS FOR EXACT LOCATIONS) SHALL HAVE DEFLECTOR SHIELDS TO AVOID DIRECT WATER SPRAY ON EQUIPMENT.
6. IN MECHANICAL AND ELECTRICAL ROOMS (ESPECIALLY ROOMS WITHOUT CEILINGS) COORDINATE CAREFULLY THE EXACT LOCATIONS OF HEADS. REVIEW MECHANICAL AND ELECTRICAL DRAWINGS TO ENSURE THAT HEADS ARE NOT INSTALLED DIRECTLY ABOVE DUCTWORK, EQUIPMENT, ETC.
7. THESE AREAS ARE ORDINARY HAZARD OCCUPANCY (ALL OTHER AREAS ARE LIGHT HAZARD OCCUPANCY UNLESS OTHERWISE NOTED)

AUTO FIRE SPRINKLER LEGEND: (THIS LEGEND FOR ALL SHEETS)

SINGLE CROSSHATCHING DENOTES BOUNDARIES OF AREAS THAT REQUIRE AUTOMATIC FIRE SPRINKLER SYSTEM.

DOUBLE CROSSHATCHING DENOTES BOUNDARIES OF AREAS THAT REQUIRE AUTOMATIC FIRE SPRINKLER SYSTEM, BUT WITH NOTED EXCEPTION, AND OR, ADDITION.

NOTE:
SEE SHEET P1.00 FOR FIRE PROTECTION GENERAL NOTES

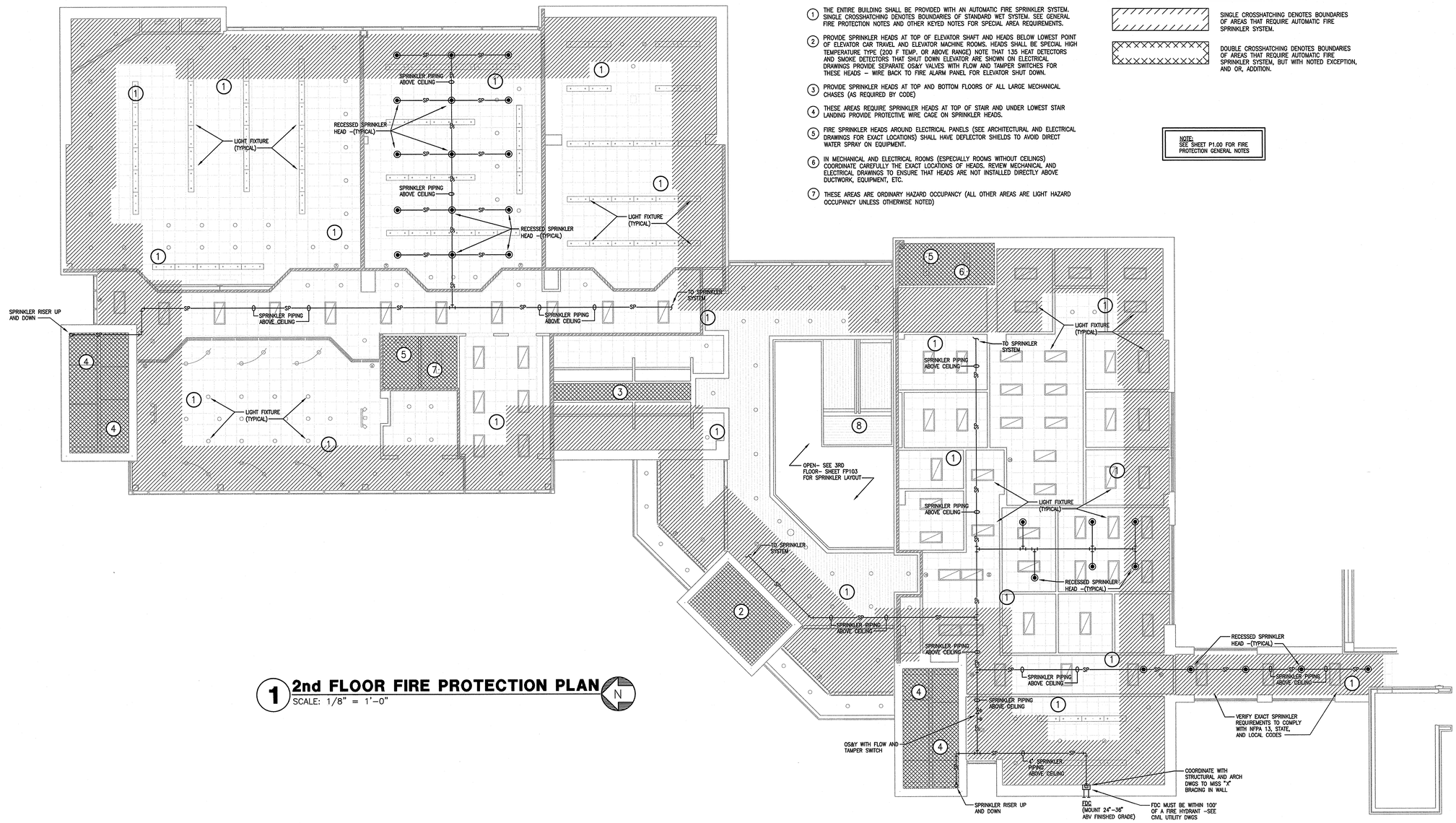

1 2nd FLOOR FIRE PROTECTION PLAN

SCALE: 1/8" = 1'–0"

ARKANSAS STATE UNIVERSITY

DONALD W. REYNOLDS CENTER FOR HEALTH SCIENCES

ARKANSAS STATE UNIVERSITY

JONESBORO, ARKANSAS

BRACKETT KRENNERICH architects

100 East Huntington, Suite D P.O. Box 1655 Jonesboro, Arkansas 72403-1655

870-932-0571 Fax 870-932-0975 www.bkarchits.com

Commission Number 12406

FP102

Date: January 25, 2008

FIRE PROTECTION KEYED NOTES:

1. THE ENTIRE BUILDING SHALL BE PROVIDED WITH AN AUTOMATIC FIRE SPRINKLER SYSTEM. SINGLE CROSSHATCHING DENOTES BOUNDARIES OF STANDARD WET SYSTEM. SEE GENERAL FIRE PROTECTION NOTES AND OTHER KEYED NOTES FOR SPECIAL AREA REQUIREMENTS.
2. PROVIDE SPRINKLER HEADS AT TOP OF ELEVATOR SHAFT AND HEADS BELOW LOWEST POINT OF ELEVATOR CAR TRAVEL AND ELEVATOR MACHINE ROOMS. HEADS SHALL BE SPECIAL HIGH TEMPERATURE TYPE (200 F TEMP. OR ABOVE RANGE) NOTE THAT 135 HEAT DETECTORS AND SMOKE DETECTORS THAT SHUT DOWN ELEVATOR ARE SHOWN ON ELECTRICAL DRAWINGS PROVIDE SEPARATE OS&Y VALVES WITH FLOW AND TAMPER SWITCHES FOR THESE HEADS -- WIRE BACK TO FIRE ALARM PANEL FOR ELEVATOR SHUT DOWN.
3. PROVIDE SPRINKLER HEADS AT TOP AND BOTTOM FLOORS OF ALL LARGE MECHANICAL CHASES (AS REQUIRED BY CODE)
4. THESE AREAS REQUIRE SPRINKLER HEADS AT TOP OF STAIR AND UNDER LOWEST STAIR LANDING PROVIDE PROTECTIVE WIRE CAGE ON SPRINKLER HEADS.
5. FIRE SPRINKLER HEADS AROUND ELECTRICAL PANELS (SEE ARCHITECTURAL AND ELECTRICAL DRAWINGS FOR EXACT LOCATIONS) SHALL HAVE DEFLECTOR SHIELDS TO AVOID DIRECT WATER SPRAY ON EQUIPMENT.
6. IN MECHANICAL AND ELECTRICAL ROOMS (ESPECIALLY ROOMS WITHOUT CEILINGS) COORDINATE CAREFULLY THE EXACT LOCATIONS OF HEADS. REVIEW MECHANICAL AND ELECTRICAL DRAWINGS TO ENSURE THAT HEADS ARE NOT INSTALLED DIRECTLY ABOVE DUCTWORK, EQUIPMENT, ETC.
7. THESE AREAS ARE ORDINARY HAZARD OCCUPANCY (ALL OTHER AREAS ARE LIGHT HAZARD OCCUPANCY UNLESS OTHERWISE NOTED)

AUTO FIRE SPRINKLER LEGEND: (THIS LEGEND FOR ALL SHEETS)

SINGLE CROSSHATCHING DENOTES BOUNDARIES OF AREAS THAT REQUIRE AUTOMATIC FIRE SPRINKLER SYSTEM.

DOUBLE CROSSHATCHING DENOTES BOUNDARIES OF AREAS THAT REQUIRE AUTOMATIC FIRE SPRINKLER SYSTEM, BUT WITH NOTED EXCEPTION, AND OR, ADDITION.

NOTE:
SEE SHEET P1.00 FOR FIRE PROTECTION GENERAL NOTES

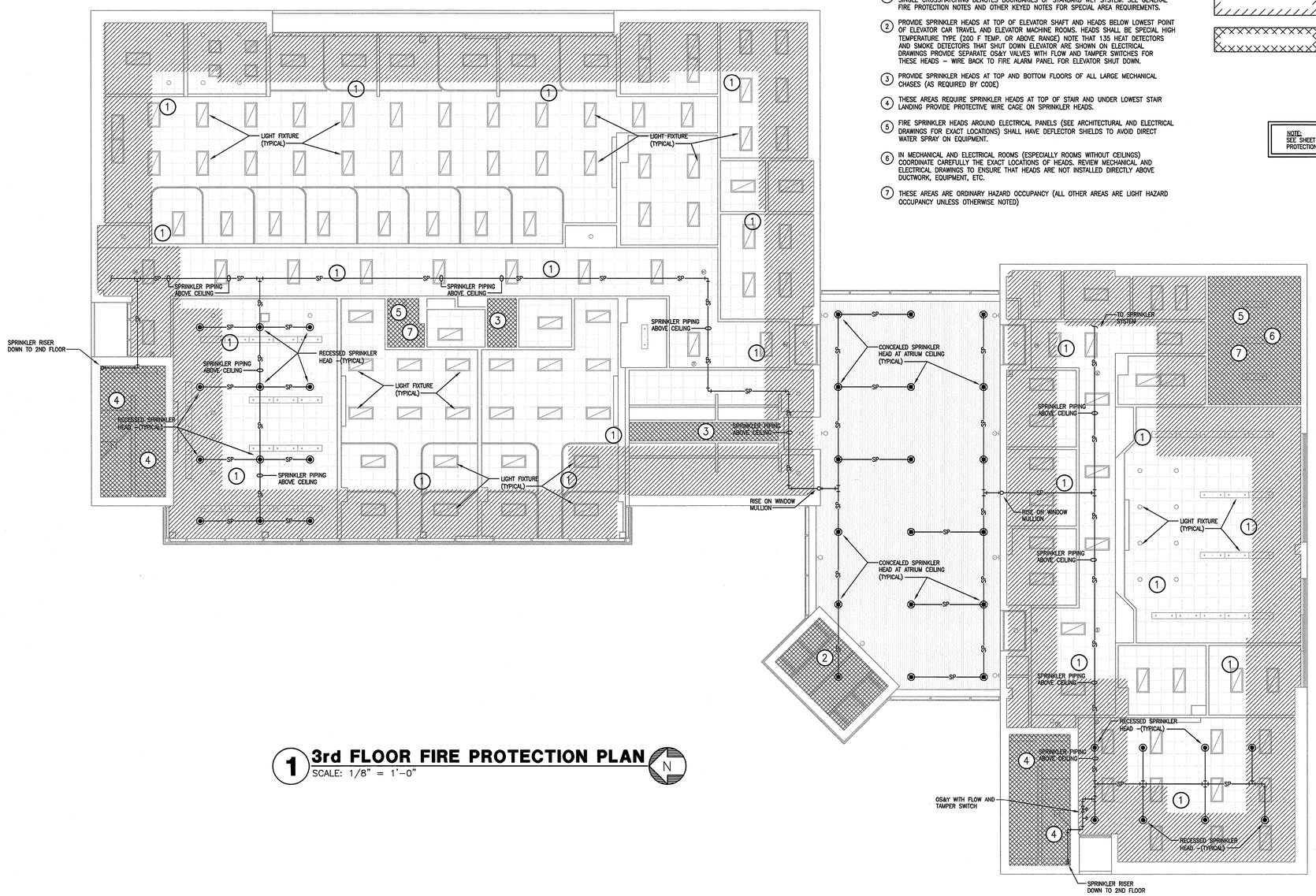

1 3rd FLOOR FIRE PROTECTION PLAN

SCALE: 1/8" = 1'-0"

ARKANSAS STATE UNIVERSITY

DONALD W. REYNOLDS CENTER FOR HEALTH SCIENCES

ARKANSAS STATE UNIVERSITY
JONESBORO, ARKANSAS

BRACKETT KRENNERICH architects
100 East Huntington, Suite D P.O. Box 1655 Jonesboro, Arkansas 72403-1655
870-932-0571 Fax 870-932-0975 www.bkarchs.com

Commission Number
12406

FP103

Date: January 25, 2008

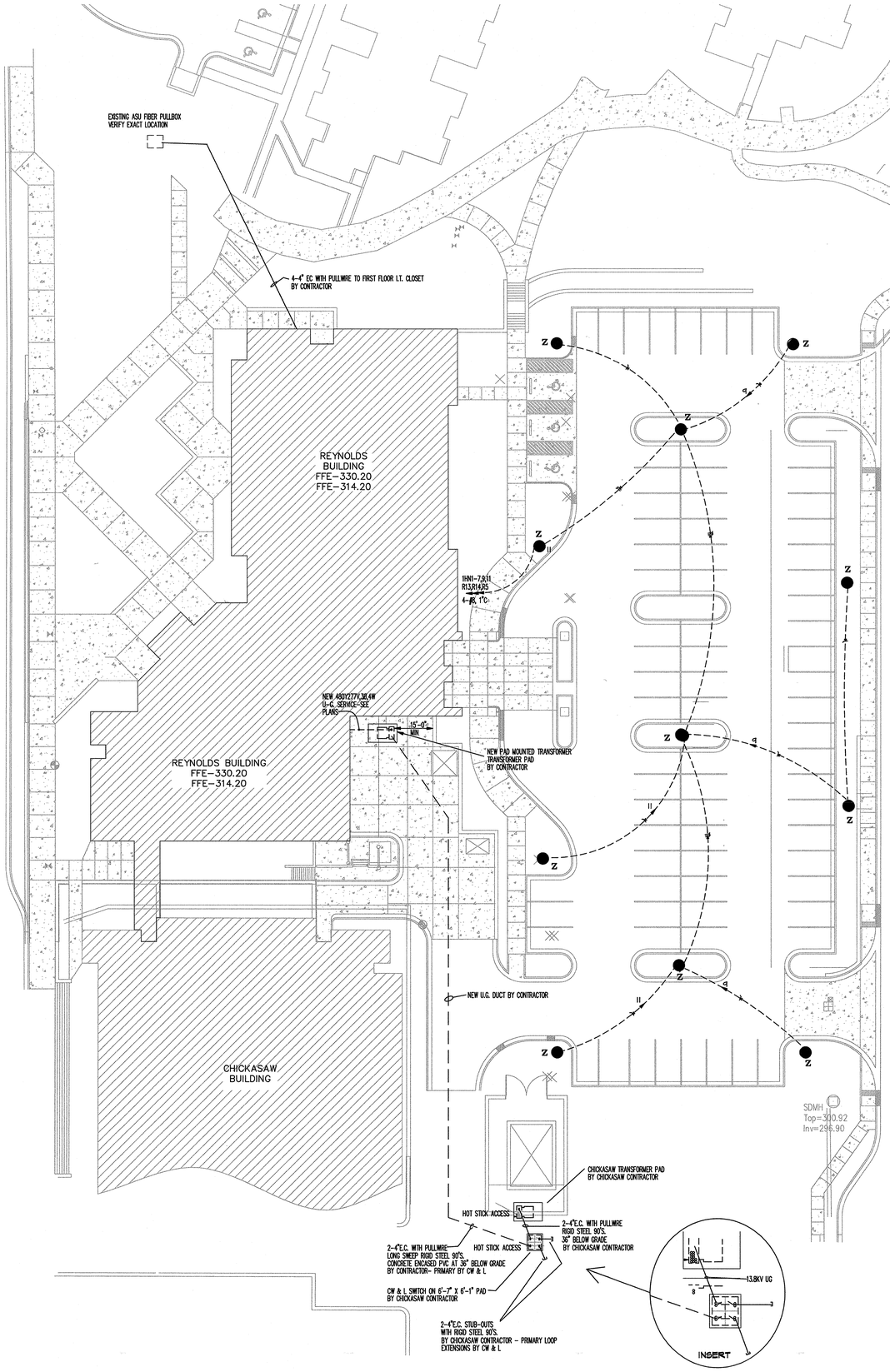

SITE PLAN - ELECTRICAL

1" = 20'-0"

NOTE:

1. WHERE POSSIBLE, DO NOT PLACE CONDUIT UNDER THIS SECTION OF FOUNDATION.
2. REINFORCING: #4 BARS 12" O.C. BOTH WAYS.
3. WHEN INSTALLING CONDUIT, DISTURB GROUND IN FOUNDATION AREA AS LITTLE AS POSSIBLE. EXTEND CONDUIT 1" ABOVE FOUNDATION.
4. TOP OF FOUNDATION TO BE SMOOTH AND LEVEL. FINAL GRADE SHALL SLOPE AWAY FROM PAD.
5. CONCRETE SHALL BE 3500 PSI AT 28 DAYS AND 1:2:4 MIXTURE WITH 6 GAL. MAX. WATER CONTENT PER SACK OF CEMENT.
6. 1" CONDUIT UNDER PAD FOR GROUND WIRE.
7. LOCATE CONDUITS UNDER PRIMARY AND SECONDARY BUSHINGS.
8. TRANSFORMER LOCATION TAG SHALL BE ATTACHED TO PAD WITH CONCRETE NAILS OR SHEET METAL SCREWS.

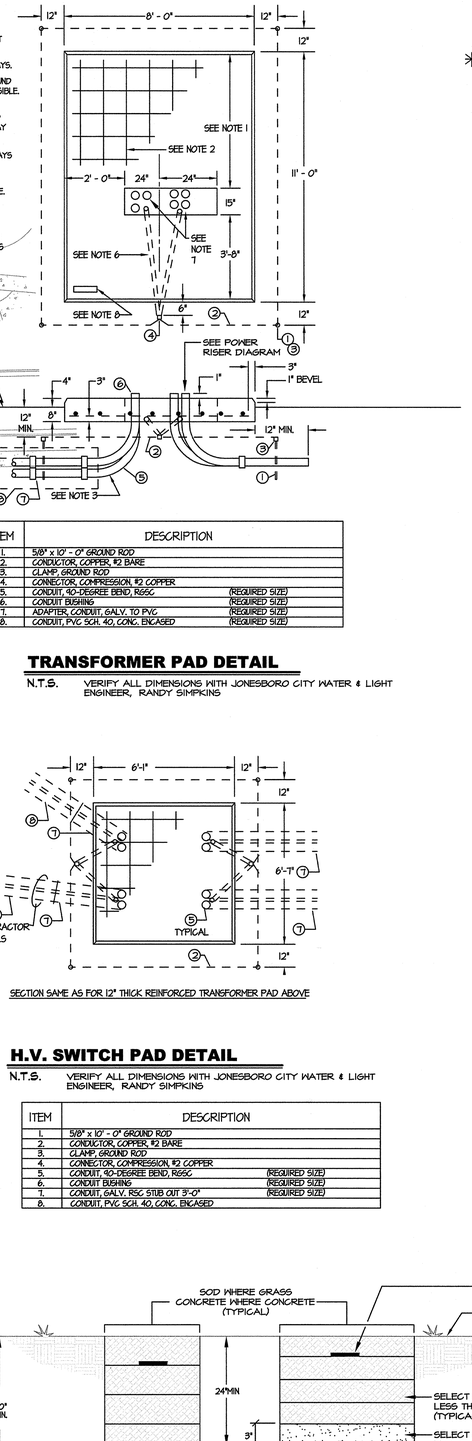

ITEM	DESCRIPTION	
1.	5/8" x 10' - 0" GROUND ROD	
2.	CONDUCTOR, COPPER, #2 BARE	
3.	CLAMP, GROUND ROD	
4.	CONNECTOR, COMPRESSION, #2 COPPER	
5.	CONDUIT, 90-DEGREE BEND, RGSC	(REQUIRED SIZE)
6.	CONDUIT BUSHING	(REQUIRED SIZE)
7.	ADAPTER, CONDUIT, GALV. TO PVC	(REQUIRED SIZE)
8.	CONDUIT, PVC SCH. 40, CONC. ENCASED	(REQUIRED SIZE)

TRANSFORMER PAD DETAIL

N.T.S. VERIFY ALL DIMENSIONS WITH JONESBORO CITY WATER & LIGHT ENGINEER, RANDY SIMPKINS

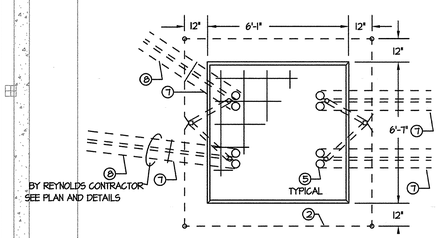

SECTION SAME AS FOR 12" THICK REINFORCED TRANSFORMER PAD ABOVE

H.V. SWITCH PAD DETAIL

N.T.S. VERIFY ALL DIMENSIONS WITH JONESBORO CITY WATER & LIGHT ENGINEER, RANDY SIMPKINS

ITEM	DESCRIPTION	
1.	5/8" x 10' - 0" GROUND ROD	
2.	CONDUCTOR, COPPER, #2 BARE	
3.	CLAMP, GROUND ROD	
4.	CONNECTOR, COMPRESSION, #2 COPPER	
5.	CONDUIT, 90-DEGREE BEND, RGSC	(REQUIRED SIZE)
6.	CONDUIT BUSHING	(REQUIRED SIZE)
7.	CONDUIT, GALV. RSC STUB OUT 3'-0"	(REQUIRED SIZE)
8.	CONDUIT, PVC SCH. 40, CONC. ENCASED	

BASE DEPTH CHART	
HEIGHT OF STANDARD	POLE BASE DEPTH
10'-0"	3'-0"
18'-0"	4'-0"
30'-0"	5'-0"

✳✳ RAISE TO 24" FOR INSTALLATIONS IN PARKING LOTS OR WITHIN 24" OF A CURB

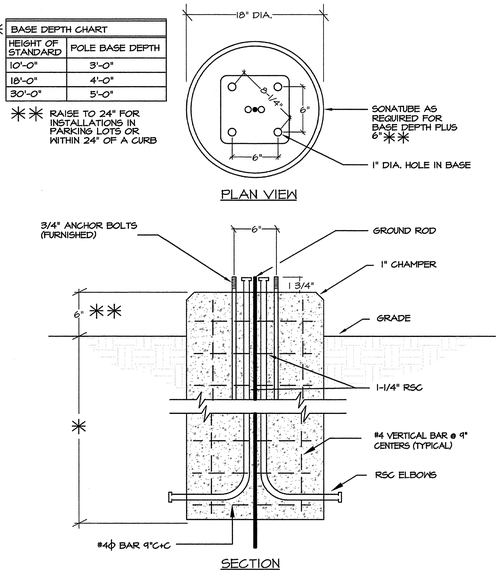

LIGHTING POLE BASE DETAIL

N.T.S. TYPE 2 FIXTURE

NOTE: CONTRACTOR TO FURNISH AND INSTALL POLE BASE, ELECTRICAL & GROUNDING CONNECTIONS AND INSTALL OWNER FURNISHED LIGHTING STANDARD AND LIGHT FIXTURE.

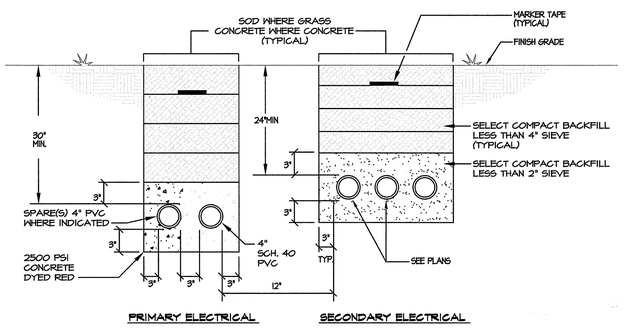

UNDERGROUND DUCT DETAILS

N.T.S.

DONALD W. REYNOLDS CENTER FOR HEALTH SCIENCES

ARKANSAS STATE UNIVERSITY

JONESBORO, ARKANSAS

BRACKETT KRENNERICH architects

100 East Huntington, Suite D P.O. Box 1655 Jonesboro, Arkansas 72403-1655

870-932-0571 Fax: 870-932-0975 www.bkarchs.com

Commission Number
12406

E001

Date: JANUARY 25, 2008

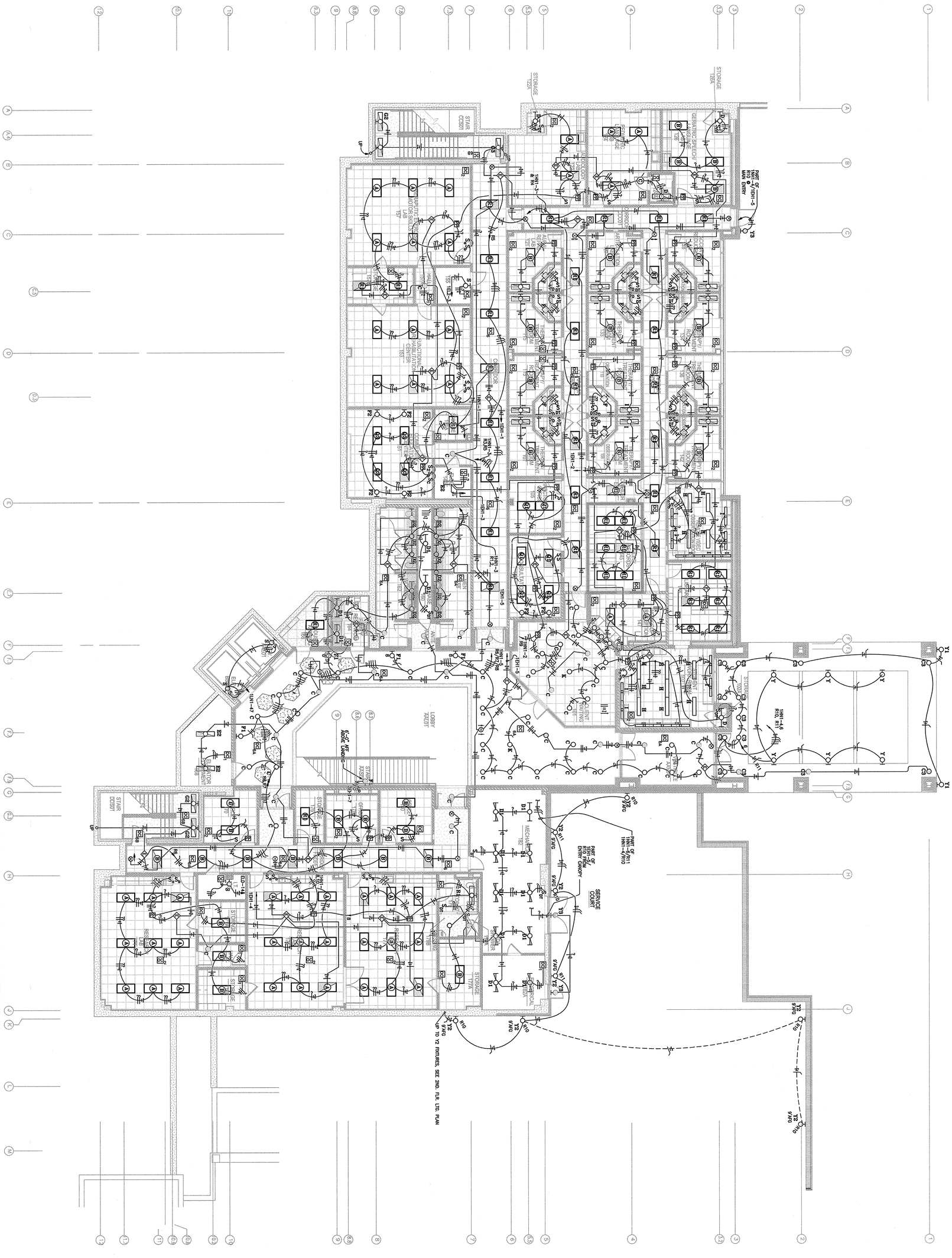

FIRST FLOOR PLAN-LIGHTING

SCALE: 1/8" = 1'-0"

BRACKETT KRENNERICH architects

DONALD W. REYNOLDS CENTER FOR HEALTH SCIENCES

ARKANSAS STATE UNIVERSITY

JONESBORO, ARKANSAS

Commission Number 12406

E101

Date: JANUARY 25, 2008

100 East Huntington, Suite D P.O. Box 1655 Jonesboro, Arkansas 72403-1655 870-932-0571 Fax 870-932-0975 www.bkarchts.com

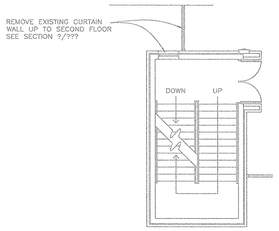

DEMOLITION PLAN

SCALE: 1/8" = 1'-0"

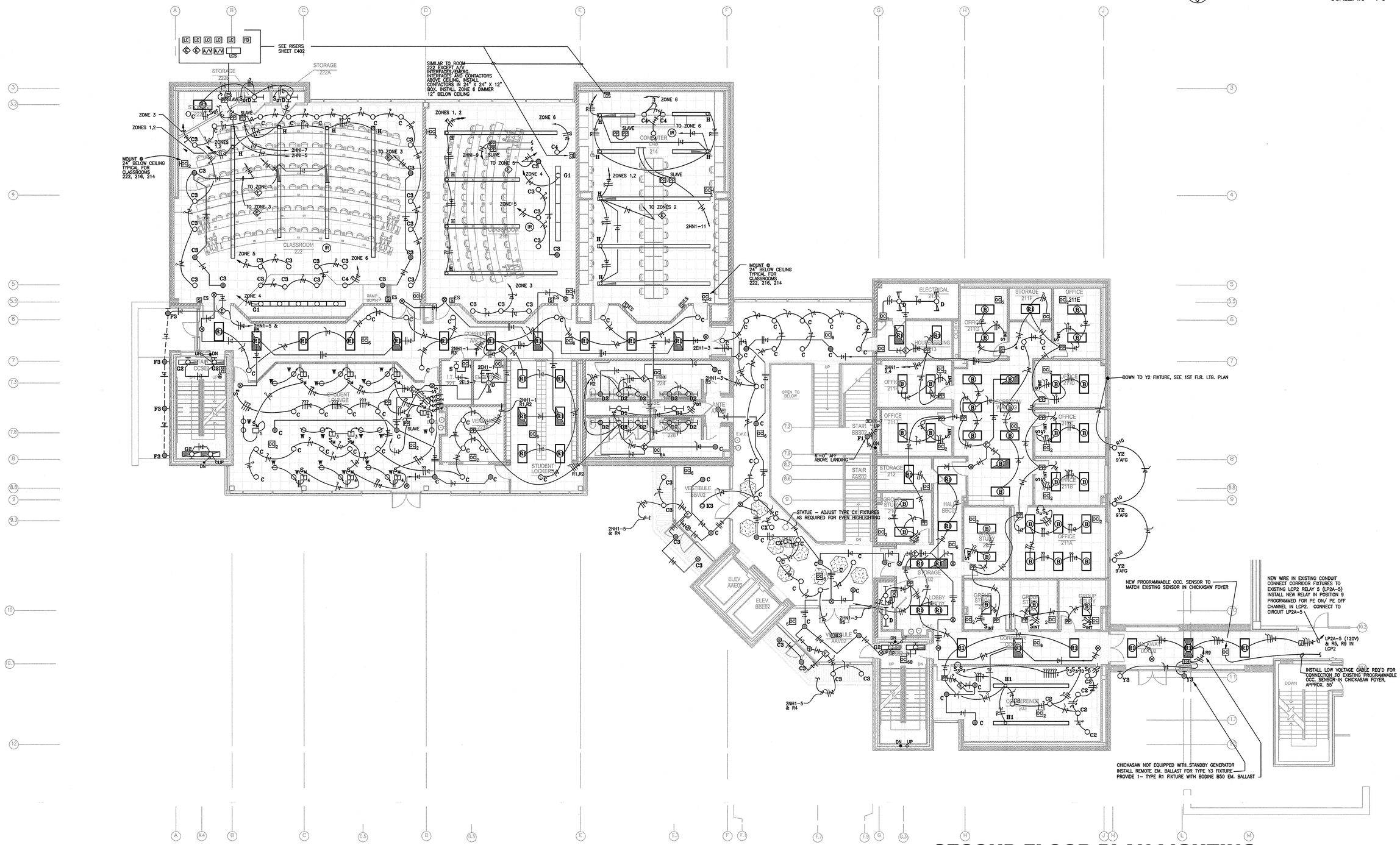

SECOND FLOOR PLAN-LIGHTING

SCALE: 1/8" = 1'-0"

DONALD W. REYNOLDS CENTER FOR HEALTH SCIENCES

ARKANSAS STATE UNIVERSITY

JONESBORO, ARKANSAS

BRACKETT KRENNERICH architects

100 East Huntington, Suite D P.O. Box 1655 Jonesboro, Arkansas 72403-1655

870-932-0571 Fax 870-932-0975 www.bkarchs.com

Commission Number 12406

E102

Date: JANUARY 25, 2008

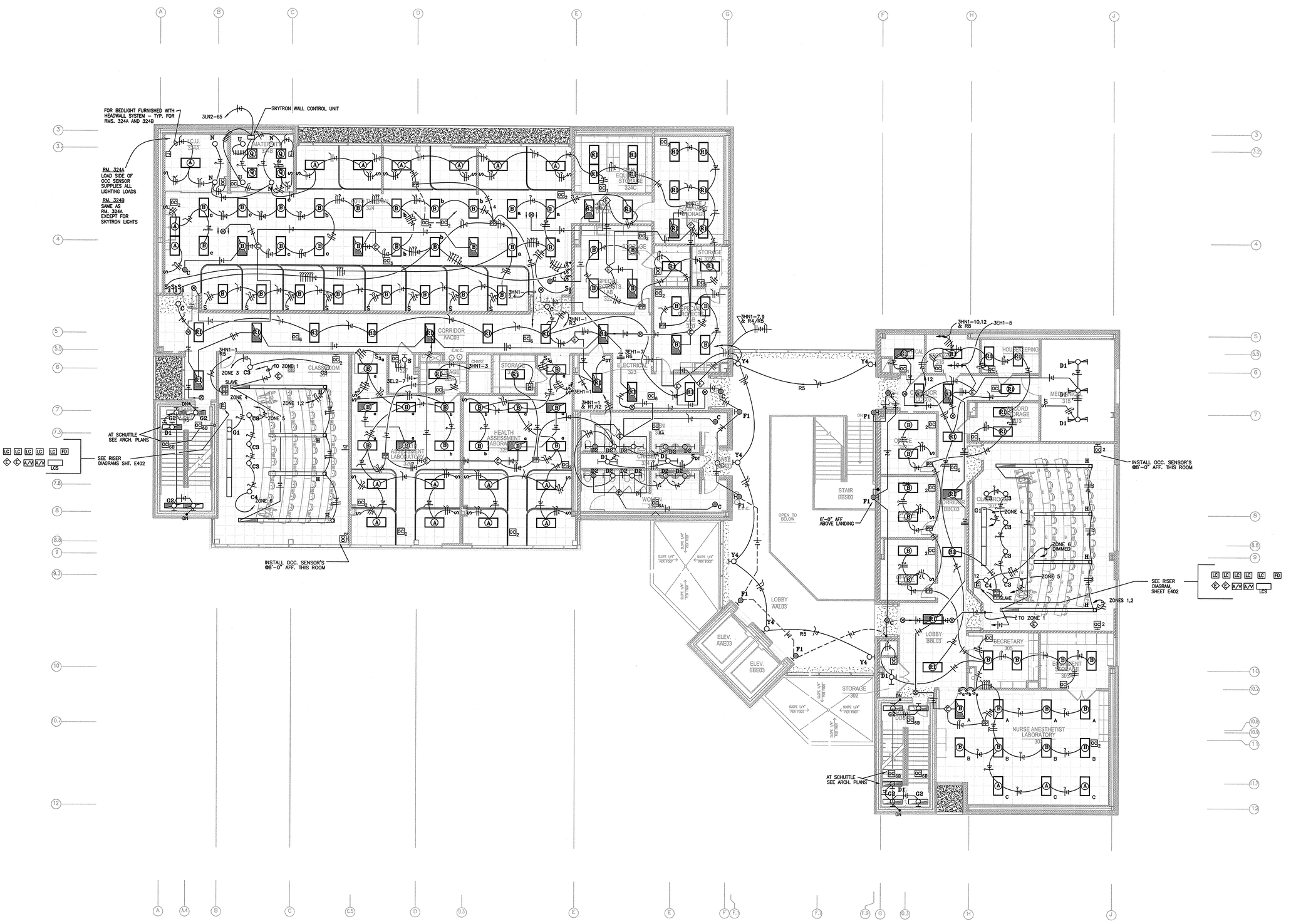

THIRD FLOOR PLAN-LIGHTING

SCALE: 1/8" = 1'-0"

DONALD W. REYNOLDS CENTER FOR HEALTH SCIENCES

ARKANSAS STATE UNIVERSITY

JONESBORO, ARKANSAS

BRACKETT KRENNERICH architects

100 East Huntington, Suite D P.O. Box 1655 Jonesboro, Arkansas 72403-1655

870-932-0571 Fax 870-932-0975 www.bkarchs.com

Commission Number 12406

E103

Date: JANUARY 25, 2008

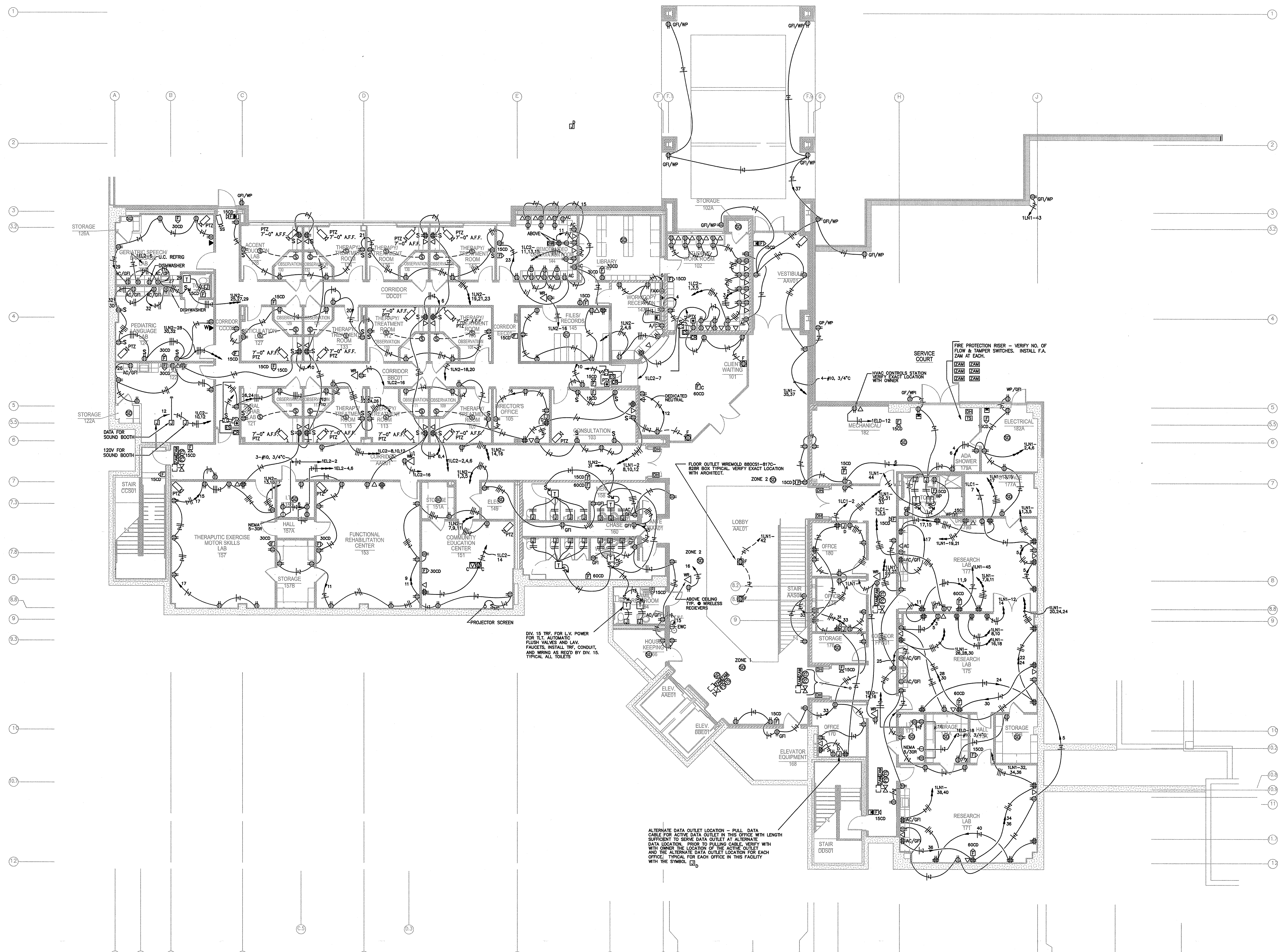

FIRST FLOOR PLAN-POWER

SCALE: 1/8" = 1'-0"

DONALD W. REYNOLDS
CENTER FOR HEALTH SCIENCES
ARKANSAS STATE UNIVERSITY
JONESBORO, ARKANSAS

BRACKETT KRENNERICH
architects
100 East Huntington, Suite D P.O. Box 1655 Jonesboro, Arkansas 72403-1655
870-932-0571 Fax 870-932-0975 www.bkarchts.com

Commission Number
12406

E201

Date: JANUARY 25, 2008

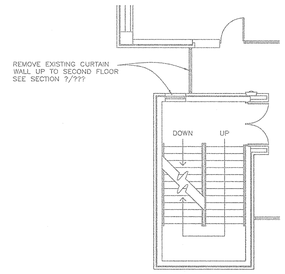

N **DEMOLITION PLAN**

SCALE: 1/8" = 1'-0"

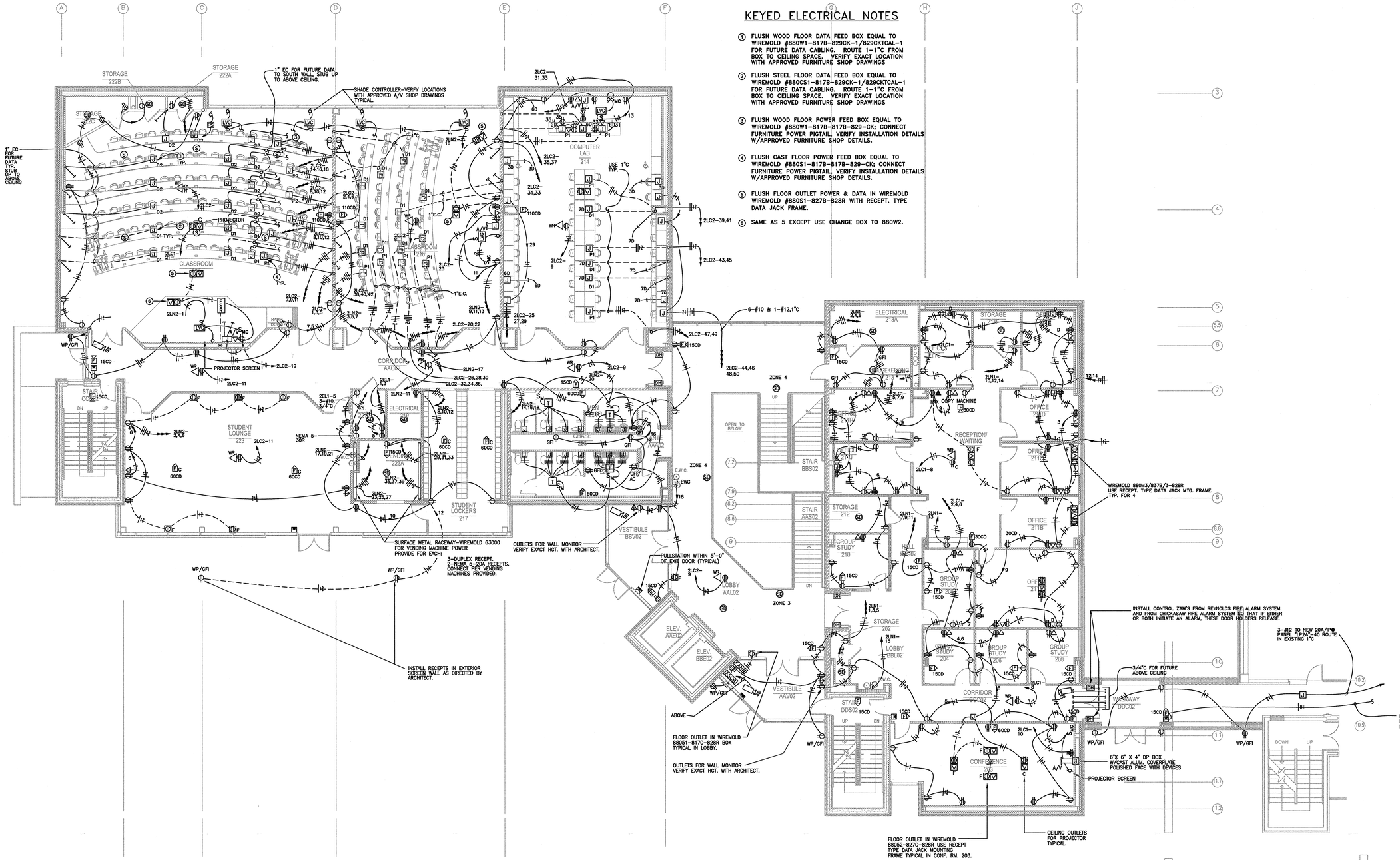

KEYED ELECTRICAL NOTES

1. FLUSH WOOD FLOOR DATA FEED BOX EQUAL TO WIREMOLD #880W1-817B-829CK-1/829CKTCAL-1 FOR FUTURE DATA CABLING. ROUTE 1-1"C FROM BOX TO CEILING SPACE. VERIFY EXACT LOCATION WITH APPROVED FURNITURE SHOP DRAWINGS
2. FLUSH STEEL FLOOR DATA FEED BOX EQUAL TO WIREMOLD #880CS1-817B-829CK-1/829CKTCAL-1 FOR FUTURE DATA CABLING. ROUTE 1-1"C FROM BOX TO CEILING SPACE. VERIFY EXACT LOCATION WITH APPROVED FURNITURE SHOP DRAWINGS
3. FLUSH WOOD FLOOR POWER FEED BOX EQUAL TO WIREMOLD #880W1-817B-817B-829-CK; CONNECT FURNITURE POWER PIGTAIL. VERIFY INSTALLATION DETAILS W/APPROVED FURNITURE SHOP DETAILS.
4. FLUSH CAST FLOOR POWER FEED BOX EQUAL TO WIREMOLD #880S1-817B-817B-829-CK; CONNECT FURNITURE POWER PIGTAIL. VERIFY INSTALLATION DETAILS W/APPROVED FURNITURE SHOP DETAILS.
5. FLUSH FLOOR OUTLET POWER & DATA IN WIREMOLD WIREMOLD #880S1-827B-828R WITH RECEPT. TYPE DATA JACK FRAME.
6. SAME AS 5 EXCEPT USE CHANGE BOX TO 880W2.

N **SECOND FLOOR PLAN-POWER**

SCALE: 1/8" = 1'-0"

DONALD W. REYNOLDS CENTER FOR HEALTH SCIENCES

ARKANSAS STATE UNIVERSITY

JONESBORO, ARKANSAS

BRACKETT KRENNERICH architects

100 East Huntington, Suite D P.O. Box 1655 Jonesboro, Arkansas 72403-1655

870-932-0571 Fax 870-932-1975 www.bkarchs.com

Commission Number 12406

E202

Date: JANUARY 25, 2008

HILL-ROM 28-6961L 1/201606 FLATWALL SYSTEM WITH INTERGRIS BED LIGHT & LOCATER, I.C.U. HEADWALL WITH 3KVA 280V1 -120V, 8CKT. ISOLATED POWER CENTER, BED LIGHT/NURSE CALL STATION/TV/NURSE CALL 15 PIN INTERFACE, 4 RED DUPLEX, 4 WHITE DUPLEX, PATIENT BED LIGHT, READING LIGHT, NIGHTLIGHT, MEDICAL GAS OUTLETS ARE TO BE ONE VACUUM WALL OUTLET, ONE AIR WALL OUTLET, ONE VACUUM SLIDE BRKT., ALL OUTLETS TO BE QUICK-CONNECT TYPE AND BE "MEDAES" COMPATIBLE-VERIFY WITH OWNER) (NURSE CALL STATION TO BE EXECUTONE CARE COM II SINGLE
PATIENT STATION W/CORRIDOR DOME LIGHT.)

HILL-ROM "IMPRESSIONS" MODEL 780D-R-XXX (COLORS BY ARCHITECT) OR EQUAL, LDR HEADWALL WITH BED LIGHT/TV/NURSE CALL 15 PIN INTERFACE, 4 RED DUPLEX, 4 WHITE DUPLEX, PATIENT BED LIGHT, READING LIGHT, NIGHTLIGHT, MEDICAL GAS OUTLETS AS FOLLOWS ONE VACUUM WALL OUTLET, ONE AIR WALL OUTLET, ONE VACUUM SLIDE BRKT., ALL OUTLETS TO BE QUICK-CONNECT TYPE AND BE "MEDAES" COMPATIBLE-VERIFY WITH OWNER)

MOUNT ALL WIRING DEVICES (EXCEPT BED RECEPT. & NURSE CALL STATION) & MED GAS. OUTLETS - (PROVIDE 1-VACUUM WALL OUTLET ONE AIR WALL OUTLET, ONE VACUUM SLIDE BRACKET, ALL OUTLETS SHALL BE THE QUICK CONNECT-CONNECT TYPE AND BE "MEDAES" COMPATIBLE -VERIFY AND OWNER) MED GAS. OUTLETS IN 23' GANG CONSOLE PROVIDE BLANK PLATES FOR UNSED GANGS. CONSOLE TO BE AMICO CORP. ALERT SERIES MOUNTED 48" AFF. - TYP. FOR 6 PLACES.

REMOTE MONITOR OUTLETS @ 7'-0" AFF. TYP. FOR 3 LOCATIONS. STUB OUT 3/4" C FOR MONITOR CABLE FROM PROJECTOR.

NURSE CALL PANEL "NCP" AUDIO-VISUAL EXECUTONE CARE COM II OR EQUAL, 8 STA. MIN. WITH DESK TYPE MASTER STATION

AUTOMATIC LAVATORY VALVES BY DIV. 15 SEE PLUMBING PLANS TYP.

JUNCTION BOX FOR TOWEL DISPENSER SEE ARCH. PLANS TYP.

FLOOR OUTLET IN WIREMOLD 880S2-827C-828R (2) USE RECEPT TYPE DATA JACK MOUNTING FRAME TYPICAL IN RM. 324.

MOTORIZED BLINDS (TYP.)

WALL MOUNT AT HEIGHT DIRECTED BY I.T. DEPT.

HEADWALL (TYPICAL)

KEYED ELECTRICAL NOTES

1. FLUSH STEEL FLOOR DATA FEED BOX EQUAL TO WIREMOLD #880CS1-817B-829CK-1/829CKTCAL-1 FOR FUTURE DATA CABLING. ROUTE 1-1"C FROM BOX TO CEILING SPACE. VERIFY EXACT LOCATION WITH APPROVED FURNITURE SHOP DRAWINGS
2. FLUSH STEEL FLOOR POWER FEED BOX EQUAL TO WIREMOLD #880S1-817B-817B-829-CK; CONNECT FURNITURE POWER PIGTAIL, VERIFY INSTALLATION DETAILS W/APPROVED FURNITURE SHOP DETAILS.

THIRD FLOOR PLAN-POWER

SCALE: 1/8" = 1'-0"

DONALD W. REYNOLDS CENTER FOR HEALTH SCIENCES

ARKANSAS STATE UNIVERSITY
JONESBORO, ARKANSAS

BRACKETT KRENNERICH architects
100 East Huntington, Suite D P.O. Box 1655 Jonesboro, Arkansas 72403-1655
870-932-0571 Fax: 870-932-9975 www.bkarchs.com

Commission Number 12406

E203

Date: JANUARY 25, 2008

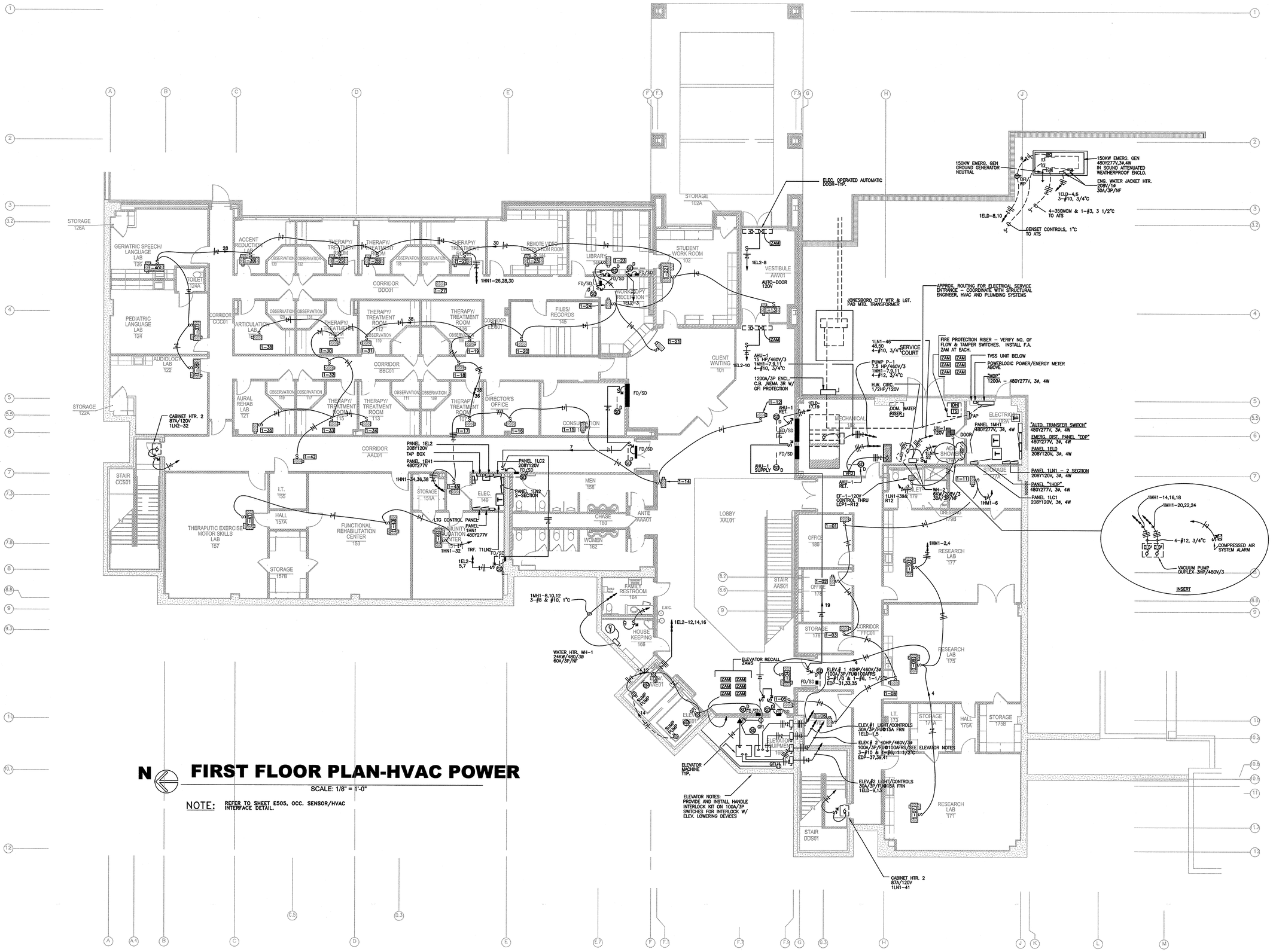

FIRST FLOOR PLAN-HVAC POWER

SCALE: 1/8" = 1'-0"

NOTE: REFER TO SHEET E505, OCC. SENSOR/HVAC INTERFACE DETAIL.

DONALD W. REYNOLDS CENTER FOR HEALTH SCIENCES

ARKANSAS STATE UNIVERSITY

JONESBORO, ARKANSAS

BRACKETT KRENNERICH architects

100 East Huntington, Suite D P.O. Box 1655 Jonesboro, Arkansas 72403-1655

870-932-0571 Fax 870-932-0975 www.bkarchs.com

Commission Number 12406

E301

Date: JANUARY 25, 2008

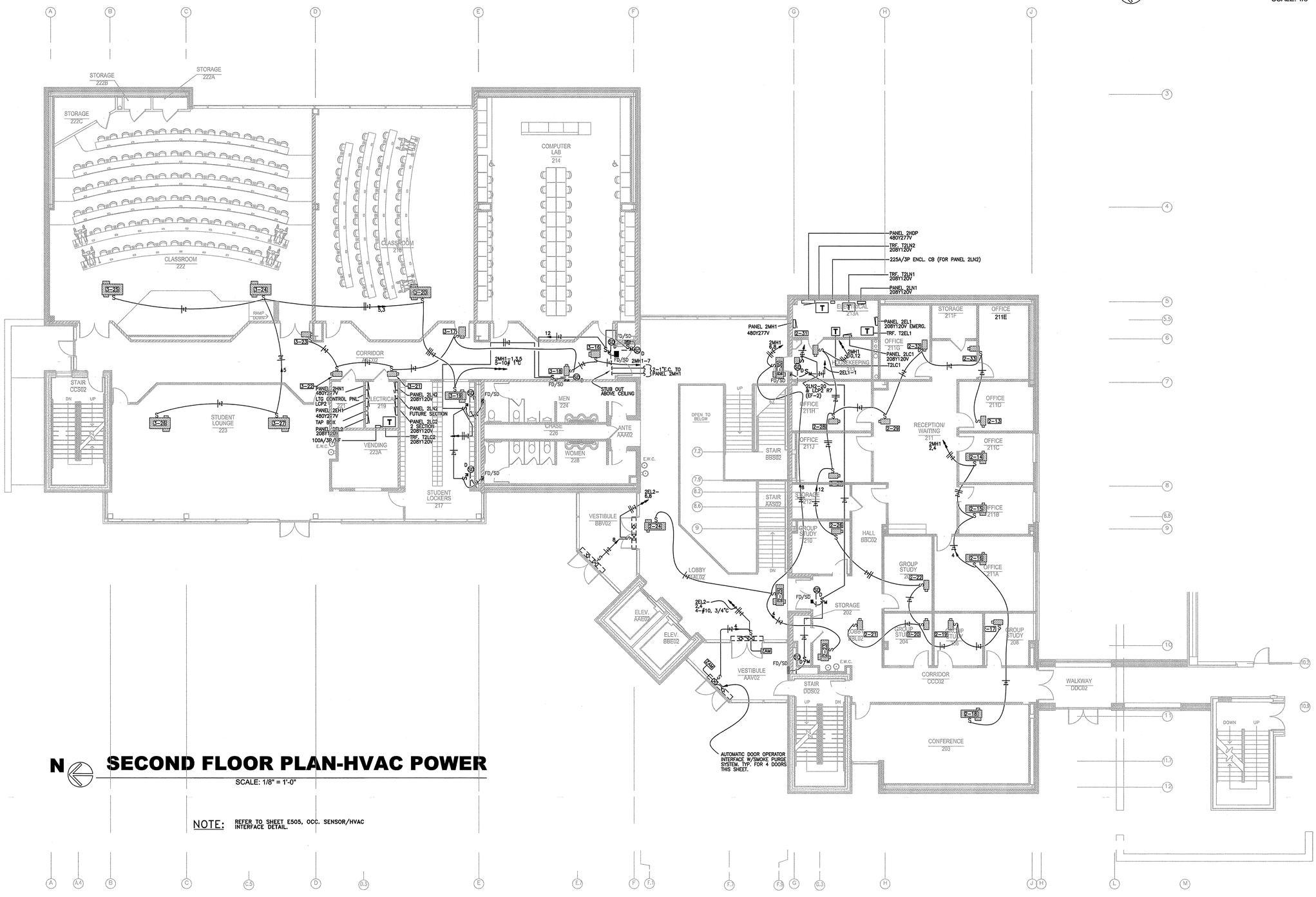

SECOND FLOOR PLAN-HVAC POWER

SCALE: 1/8" = 1'-0"

NOTE: REFER TO SHEET E505, OCC. SENSOR/HVAC INTERFACE DETAIL.

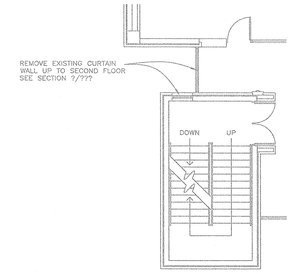

DEMOLITION PLAN

SCALE: 1/8" = 1'-0"

DONALD W. REYNOLDS CENTER FOR HEALTH SCIENCES

ARKANSAS STATE UNIVERSITY

JONESBORO, ARKANSAS

BRACKETT KRENNERICH architects

100 East Huntington, Suite D P.O. Box 1655 Jonesboro, Arkansas 72403-1655

870-932-0571 Fax 870-932-0975 www.bkarchts.com

Commission Number 12406

E302

Date: JANUARY 25, 2008

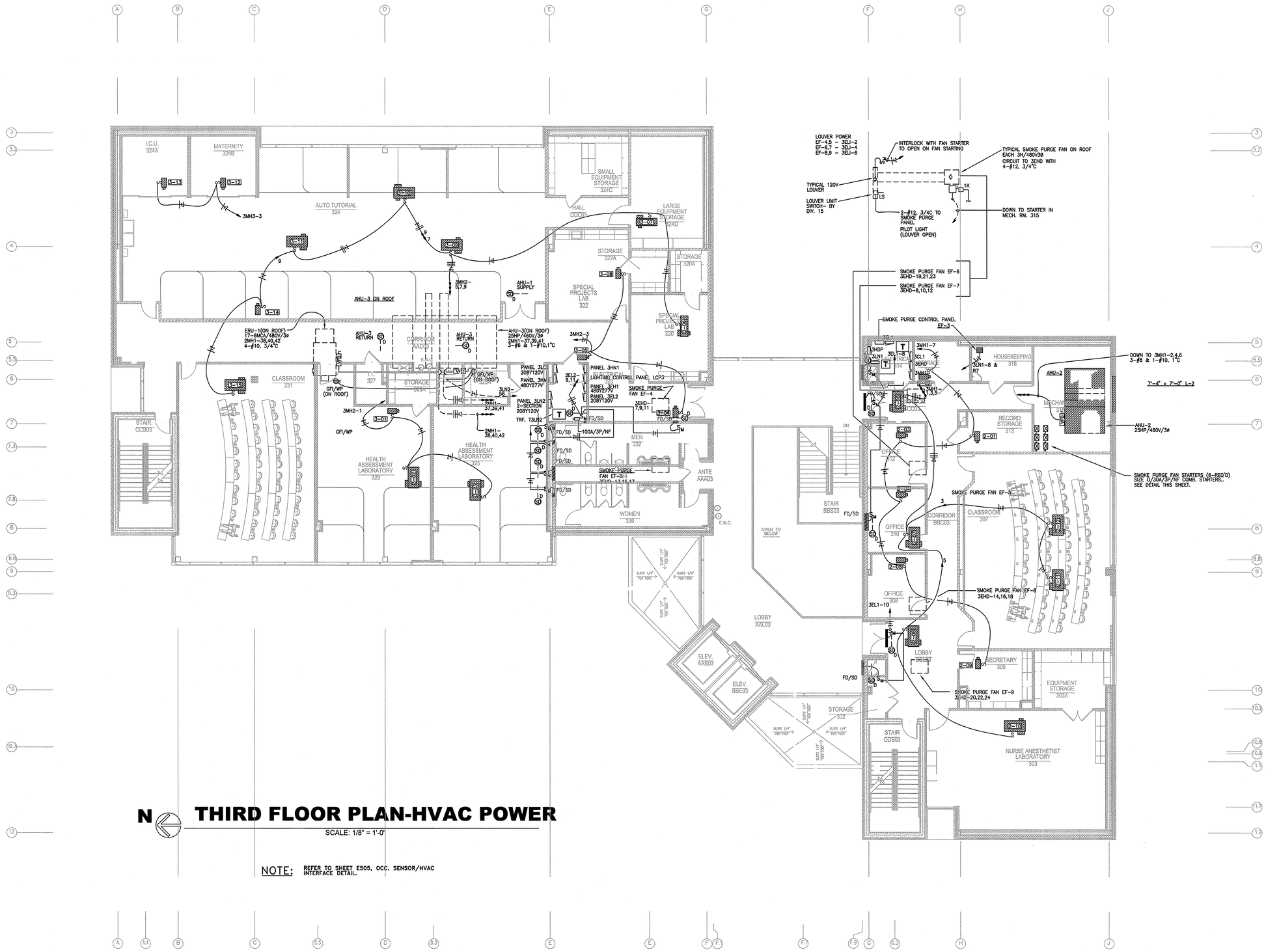

N

THIRD FLOOR PLAN-HVAC POWER

SCALE: 1/8" = 1'-0"

NOTE: REFER TO SHEET E505, OCC. SENSOR/HVAC INTERFACE DETAIL.

DONALD W. REYNOLDS CENTER FOR HEALTH SCIENCES

ARKANSAS STATE UNIVERSITY

JONESBORO, ARKANSAS

BRACKETT KRENNERICH architects

100 East Huntington, Suite D P.O. Box 1655 Jonesboro, Arkansas 72403-1655

870-932-0571 Fax 870-932-0975 www.bkarchs.com

Commission Number 12406

E303

Date: JANUARY 25, 2008

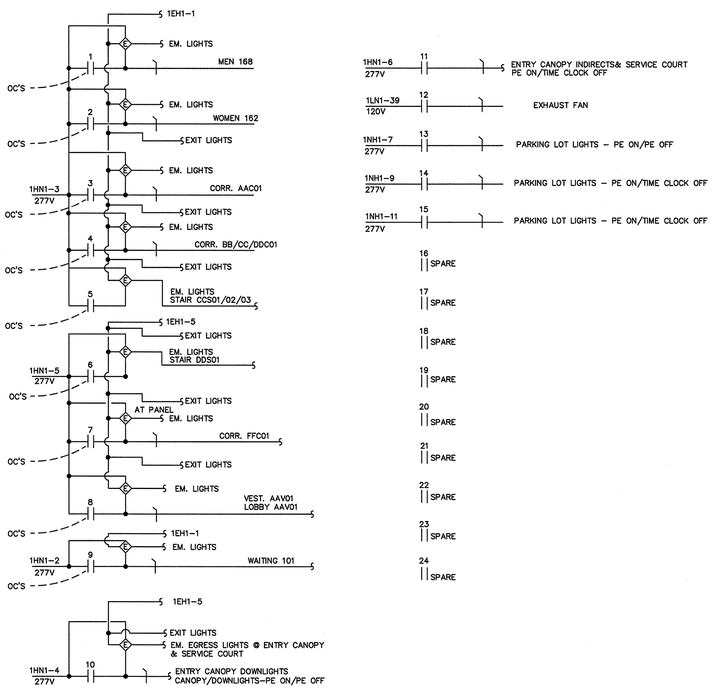

LCP1

EMERGENCY LIGHTING INTERFACE UNITS SHOWN ARE REMOTE FROM THE LIGHTING PANELS

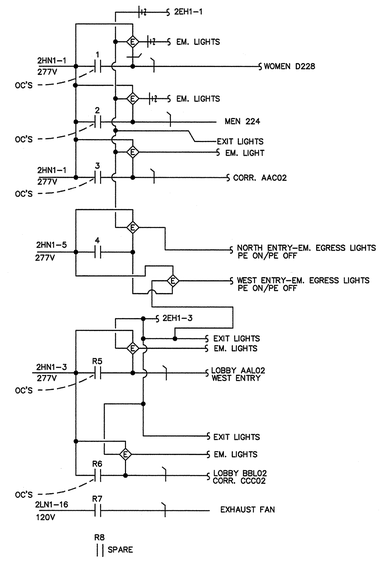

LCP2

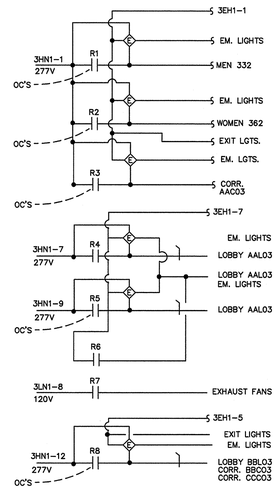

LCP3

LIGHTING CHANNEL SCHEDULE			
LCP	CHANNEL	CHANNEL DESCRIPTION	CONTROL STRATEGY
1,2,3	A	CORRIDORS/TOILETS	TIME ON/SWEEP OFF OCCUPANCY SENSOR OVERRIDE
1	B	STAIRS	TIME ON/SWEEP OFF OCCUPANCY SENSOR OVERRIDE
1,2,3	C	SPARE	
3	D	2- ATRIUM TYPE Y4 FIXTURES SOUTH WALL (RS)	PHOTO-CELL ON/ TIME CLOCK OFF
3	E	4-ATRIUM TYPE Y4 FIXTURES NORTH	TIME CLOCK ON/TIME CLOCK OFF
3	F	ATRIUM EMERG. LIGHTS USED AT NIGHTLIGHTS	TIME CLOCK ON/PHOTO-CELL OFF
1,2	G	EXTERIOR LIGHTS	PHOTO-CELL ON/ PHOTO CELL OFF
1	H	EXTERIOR LIGHTS	PHOTO-CELL ON/TIME CLOCK OFF

REFER TO DETAIL 5 THIS SHEET FOR CORRIDOR CONTROLS - WHERE LCP IS NOT LISTED, CHANNEL IS SPARE

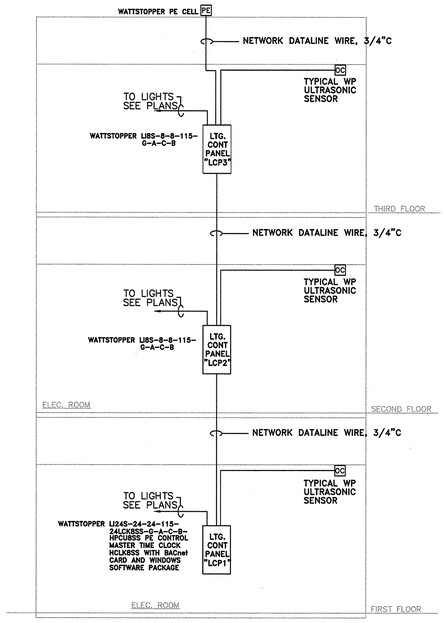

1 CONTROL DIAGRAM - LIGHTING CONTROL PANELS (WATTSTOPPER AS SCHEDULED)

SCALE: NTS

2 RISER DIAGRAM - LTG. CONTROLS

PROVIDE MINIMUM 16 HOURS (TWO DAYS) ON SITE PROGRAMMING AND OWNER INSTRUCTION FOR LIGHTING CONTROL SYSTEM. PROVIDE ALL ACCESSORIES AND ADDITIONAL POWER SUPPLIES FOR OCCUPANCY SENSORS AS REQUIRED FOR COMPLETE AND OPERABLE SYSTEM.

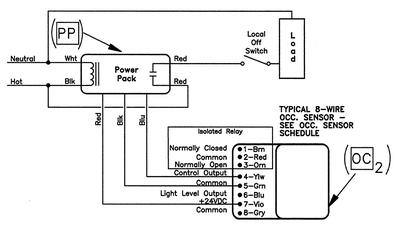

3 TYPICAL OCC. SENSOR WIRING (WITH POWER PACK)

NTS

POWER PACK NOT REQUIRED FOR WALL SWITCH TYPE OCCUPANCY SENSOR OC1

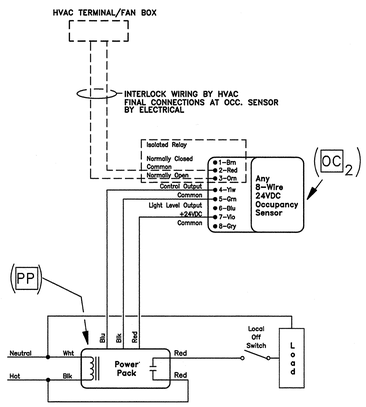

4 TYPICAL OCC. SENSOR/ HVAC INTERFACE

NTS

TYPICAL FOR OFFICES, CLASSROOMS, CONFERENCE ROOMS, ETC. REFER TO HVAC PLANS - NOT REQUIRED AT ROOMS WITH WALL SWITCHES

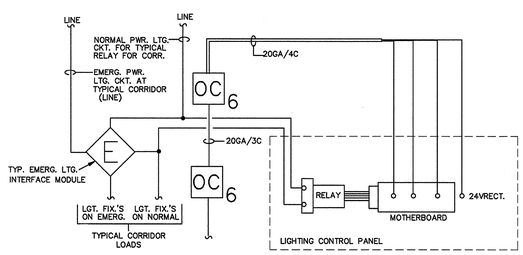

5 TYP. PROGAMMABLE OCC. SENSOR(S)

NTS

LIGHTING CONTROL PANEL TO BE PROGRAMMED TO PROVIDE "ON" OVERRIDE OF OCCUPANCY SENSOR(S) CONTROLLING RELAY(S) ASSIGNED FOR CONTROL OF CORRIDOR LIGHTING CIRCUITS DURING NORMAL BUSINESS HOURS. OCCUPANCY SENSORS TO PROVIDE ON/OFF CONTROL OF CORRIDOR LIGHTING RELAY DURING NON-NORMAL BUSINESS HOURS ONLY. OWNER TO PROVIDE TIMES FOR NORMAL BUSINESS HOURS AND NON-NORMAL BUSINESS HOURS.

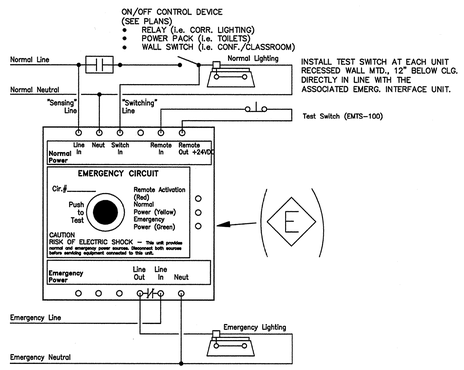

INTERFACE TO ALLOW FOR LOCAL SWITCH/LTG. CONTROL OF ROOM LIGHTING FIXTURES WHILE PROVIDING FOR EMERGENCY POWER OVERRIDE OF NORMAL POWER CONTROLS DURING NORMAL POWER OUTAGES. UL 924 LISTED.

6 TYP. EMERG. LTG. INTERFACE UNIT

NTS

PROVIDE AND INSTALL TEST SWITCH AS INDICATED ABOVE FOR EACH UNIT

DONALD W. REYNOLDS CENTER FOR HEALTH SCIENCES

ARKANSAS STATE UNIVERSITY

JONESBORO, ARKANSAS

BRACKETT KRENNERICH architects

100 East Huntington, Suite D P.O. Box 1655 Jonesboro, Arkansas 72403-1655

870-932-0571 Fax 870-932-0975 www.bkarchs.com

Commission Number 12406

E401

Date: JANUARY 25, 2008

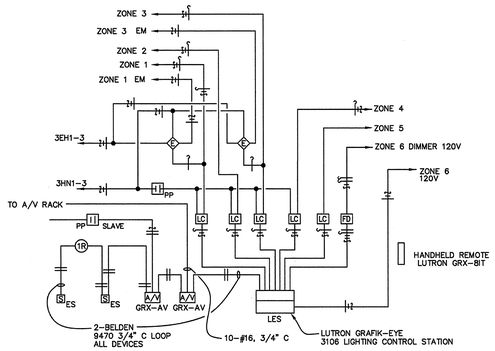

ZONE 1 – TYPE H CENTER LAMP
ZONE 2 – TYPE H OUTBOARD LAMPS
ZONE 3 – TYPE C3 FIXTURES @ PERIMETER
ZONE 4 – TYPE G1 FIXTURES (WHITEBOARD)
ZONE 5 – DOWN C3 FIXTURES @ INSTRUCTOR
ZONE 6 – DIMMED C4 FIXTURE @ INSTRUCTOR

DETAIL 1

RM. 331

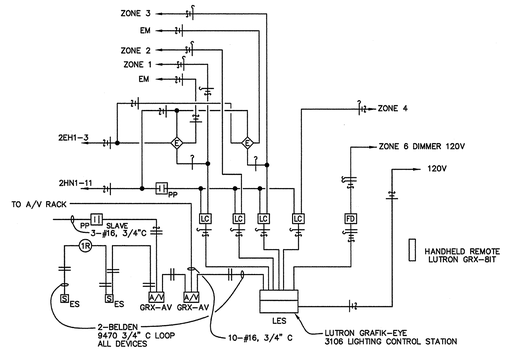

ZONE 1 – TYPE H CENTER LAMP–STUDENTS
ZONE 2 – TYPE H OUTBOARD LAMP–STUDENTS
ZONE 3 – TYPE H CENTER LAMP–INSTRUCTOR
ZONE 4 – TYPE H OUTBOARD LAMP–INSTRUCTOR
ZONE 5 – NOT USED
ZONE 6 – DIMMED C4 FIXTURE @ INSTRUCTOR

DETAIL 2

RM. 214

VIDEO SETTING (SCENE 4)
VIDEO SETTING (SCENE 3)
LECTURE SETTING SHADES CLOSED (SCENE 2)
LECTURE SETTING SHADES OPEN (SCENE 1)

COMMANDS/FUNCTIONS	PRESET NO.1	PRESET NO.2	PRESET NO.3	PRESET NO.4
LIGHTING ZONE 1	OFF	ON	ON	
LIGHTING ZONE 2	ON	ON	OFF	
LIGHTING ZONE 3	FULL BRIGHT	FULL BRIGHT	OFF	
LIGHTING ZONE 4	FULL BRIGHT	FULL BRIGHT	DIMMED	
LIGHTING ZONE 5	ON	ON	OFF	
LIGHTING ZONE 6	ON	ON	OFF	

PROGRAM ALL PRESETS AT EACH ROOM PER OWNER'S REQUIREMENTS
PROVIDE MINIMUM 16 HOURS (TWO DAYS) ON SITE PROGRAMMING AND OWNER INSTRUCTION FOR LIGHTING CONTROL SYSTEM.
PROVIDE ALL ACCESSORIES AND ADDITIONAL POWER SUPPLIES AS REQUIRED FOR COMPLETE AND OPERABLE SYSTEM

INITIAL PRESET PROGRAMMING

1R – LUTRON GRX-CIR-WH
S ES – LUTRON NTGR-2B-SL-CIR-WH
A/V GRX-AV – LUTRON GRX-AV
FD – LUTRON GRX-FDB1 FLUOR DIMMER MODULE
— MOUNT IMMEDIATELY ADJACENT TO NEMA 1 CABINET HOUSING RELAYS/EM PWR INTERFACE MODULES

LC – POWER RELAY, 30A, 120V COIL SQ-D CLASS 8501, TYPE CO-7
PP – OCC. SENSOR POWER PACK/ SLAVE POWER PACK
– EMERGENCY POWER INTERFACE MODULE
— GROUP TOGETHER WITHIN A 18" X16" X 6" DP NEMA 1 CABINET W/HINGED COVER IN CLOSET OR ABOVE CEILING.

LES – LUTRON GRAFIK-EYE 3106 LIGHTING CONTROL STATION
— LOCATE IN CLOSET OR ADJACENT TO PROFESSOR TEACHING STATION AS INDICATED ON PLANS. INSTALL AT SWITCH HGT., PROVIDE LOCKABLE SMOKED PLEXIGLAS SECURITY COVER FOR EACH UNIT.

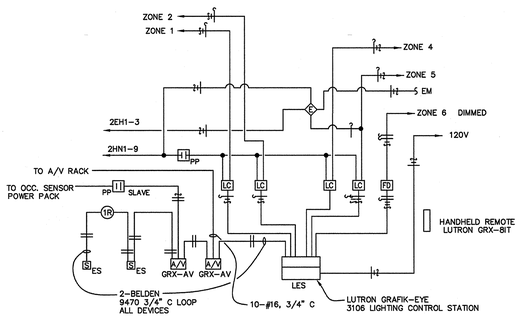

ZONE 1 – TYPE H CENTER LAMP
ZONE 2 – TYPE H OUTBOARD LAMPS
ZONE 3 – NOT USED
ZONE 4 – TYPE G1 FIXTURES
ZONE 5 – DOWN C3 FIXTURES @ INSTRUCTOR
ZONE 6 – DIMMED C4 FIXTURE @ INSTRUCTOR

DETAIL 3

RM. 216

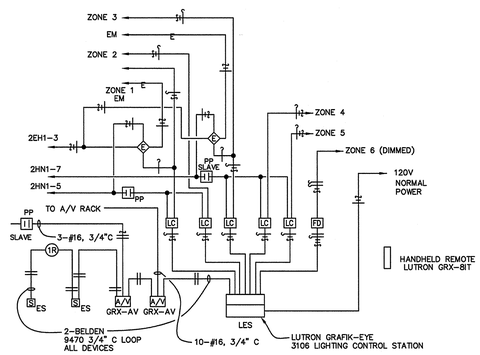

ZONE 1 – TYPE H CENTER LAMP
ZONE 2 – TYPE H OUTBOARD LAMPS
ZONE 3 – TYPE C3 FIXTURES @ PERIMETER
ZONE 4 – TYPE G1 FIXTURES (WHITEBOARD)
ZONE 5 – DOWN C3 FIXTURES @ INSTRUCTOR
ZONE 6 – DIMMED C4 FIXTURE @ INSTRUCTOR

DETAIL 4

RM. 222

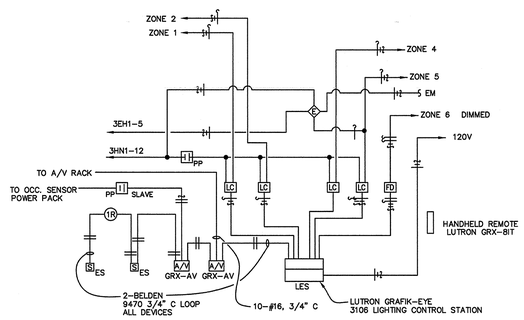

ZONE 1 – TYPE H CENTER LAMP
ZONE 2 – TYPE H OUTBOARD LAMPS
ZONE 3 – NOT USED
ZONE 4 – TYPE G1 FIXTURES
ZONE 5 – DOWN C3 FIXTURES @ INSTRUCTOR
ZONE 6 – DIMMED C4 FIXTURE @ INSTRUCTOR

DETAIL 5

RM. 307

1 CONTROL DIAGRAMS - LECTURE/CLASSROOM LOCAL PROGRAMMABLE LIGHTING CONTROL SYSTEMS

SCALE: NTS

DONALD W. REYNOLDS
CENTER FOR HEALTH SCIENCES
ARKANSAS STATE UNIVERSITY
JONESBORO, ARKANSAS

BRACKETT KRENNERICH architects
100 East Huntington, Suite D P.O. Box 1655 Jonesboro, Arkansas 72403-1655
870-932-0571 Fax 870-932-0575 www.bkarchts.com

Commission Number 12406
E402
Date: JANUARY 25, 2008

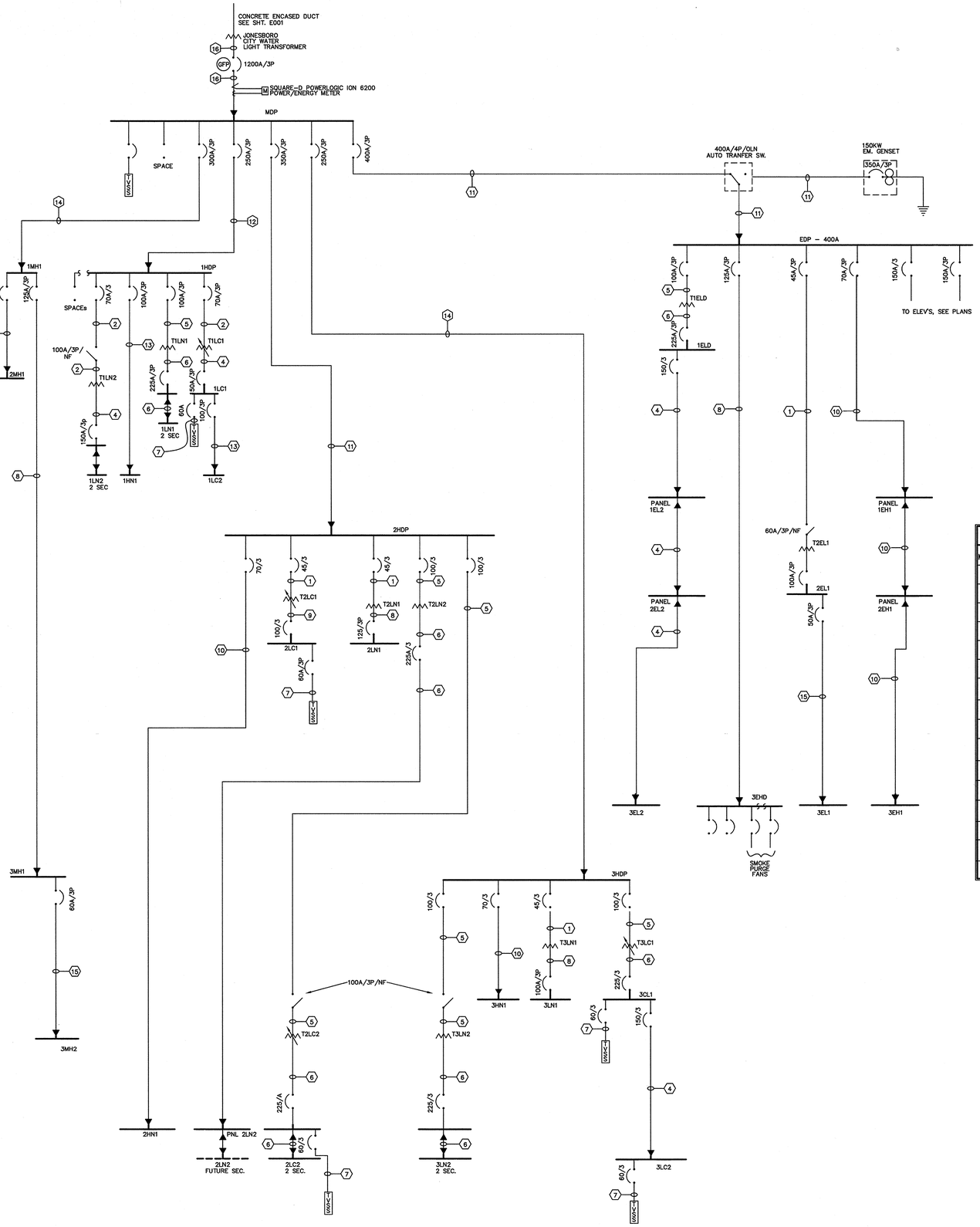

ONE LINE DIAGRAM
SCALE NONE

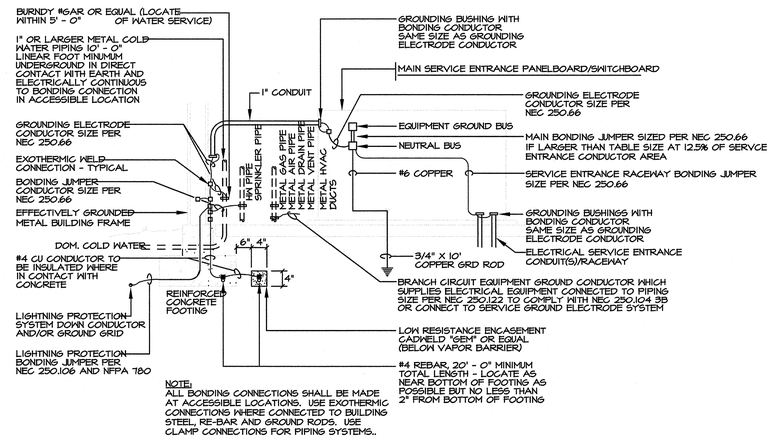

NOTE:
ALL BONDING CONNECTIONS SHALL BE MADE AT ACCESSIBLE LOCATIONS. USE EXOTHERMIC CONNECTIONS WHERE CONNECTED TO BUILDING STEEL, RE-BAR AND GROUND RODS. USE CLAMP CONNECTIONS FOR PIPING SYSTEMS..

ELECTRICAL SERVICE GROUNDING/BONDING DETAIL
N.T.S.

FEEDER WIRE AND CONDUIT SCHEDULE

MARK	FEEDER / CONDUIT SIZE
1	3-#8 & 1-#10, 1"C
2	3-#4 & 1-#6, 1½"C
3	4-#12, ¾"C
4	4-#1/0 & 1-#6, 2"C
5	3-#2 & 1-#6, 1½"C
6	4-#4/0 & 1-#4, 2½"C
7	5-#6, 1¼"C
8	4-#1 & 1-#6, 1½"C
9	4-#3 & 1-#8, 1½"C
10	4-#4 & 1-#6, 1½"C
11	4-500 MCM & 1-#3, 4"C
12	4-250 MCM & 1-#3, 3"C
13	4-#2 & 1-#6, 1½"C
14	4-350 MCM & 1-#3, 3"C
15	4-#6 & 1-#10, 1"C
16	4-4"C'S EA. W/4-350MCM

TRANSFORMER SCHEDULE

TRANSFORMER NO.	KVA RATING	PRIMARY VOLTAGE	SECONDARY VOLTAGE	MOUNTING	°C RISE
T1LN1	45	480V	208Y120V	FLOOR	150
T1LN2	75	480V	208Y120V	FLOOR	150
T2LN1	45	480V	208Y120V	FLOOR	150
T2LN2	75	480V	208Y120V	FLOOR	150
T3LN1	45	480V	208Y120V	FLOOR	150
T3LN2	75	480V	208Y120V	FLOOR	150
T1LC1*	45	480V	208Y120V	FLOOR	150
T2LC1*	45	480V	208Y120V	FLOOR	150
T2LC2*	75	480V	208Y120V	FLOOR	150
T3LC1*	75	480V	208Y120V	FLOOR	150
T1ELD*	75	480V	208Y120V	FLOOR	150
T2EL1*	30	480V	208Y120V	FLOOR	150

* HARMONIC CANCELLATION

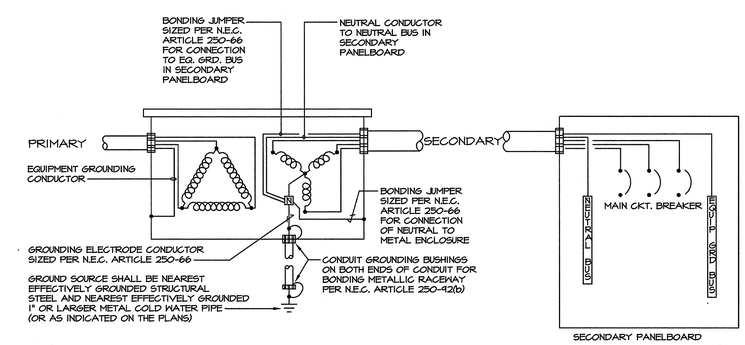

TYPICAL DRY TYPE TRANSFORMER GROUNDING/CONNECTION DETAIL
N.T.S.

DONALD W. REYNOLDS CENTER FOR HEALTH SCIENCES

ARKANSAS STATE UNIVERSITY
JONESBORO, ARKANSAS

BRACKETT KRENNERICH architects
100 East Huntington, Suite D P.O. Box 1655 Jonesboro, Arkansas 72403-1655
870-932-0571 Fax: 870-932-0975 www.bkarchs.com

Commission Number
12406

E501

Date: JANUARY 25, 2008

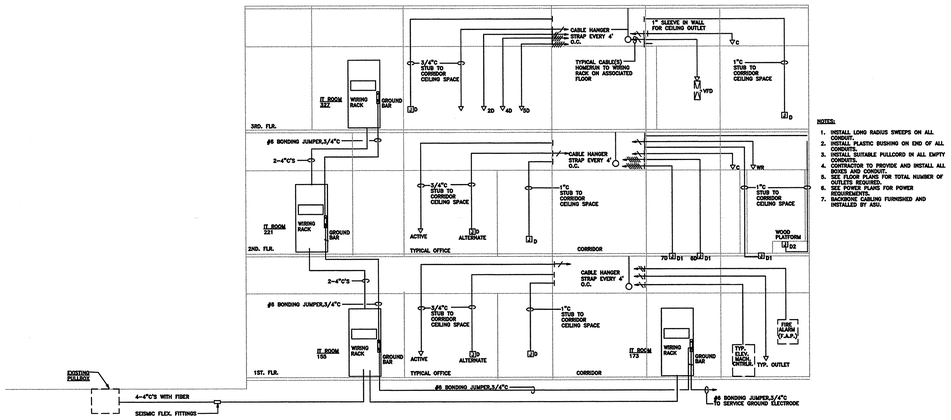

NOTES:

1. INSTALL LONG RADIUS SWEEPS ON ALL CONDUIT.
2. INSTALL PLASTIC BUSHING ON END OF ALL CONDUIT.
3. INSTALL SUITABLE PULLCORD IN ALL EMPTY CONDUIT.
4. CONTRACTOR TO PROVIDE AND INSTALL ALL BOXES AND CONDUIT.
5. SEE FLOOR PLANS FOR TOTAL NUMBER OF OUTLETS REQUIRED.
6. SEE POWER PLANS FOR POWER REQUIREMENTS.
7. BACKBONE CABLING FURNISHED AND INSTALLED BY ASU.

1 I.T. SYSTEM RISER DIAGRAM.

SCALE: NTS

DONALD W. REYNOLDS CENTER FOR HEALTH SCIENCES

ARKANSAS STATE UNIVERSITY

JONESBORO, ARKANSAS

BRACKETT KRENNERICH architects

100 East Huntington, Suite D P.O. Box 1655 Jonesboro, Arkansas 72403-1655

870-932-0571 Fax 870-932-0975 www.bkarchits.com

Commission Number 12406

E502

Date: JANUARY 25, 2008

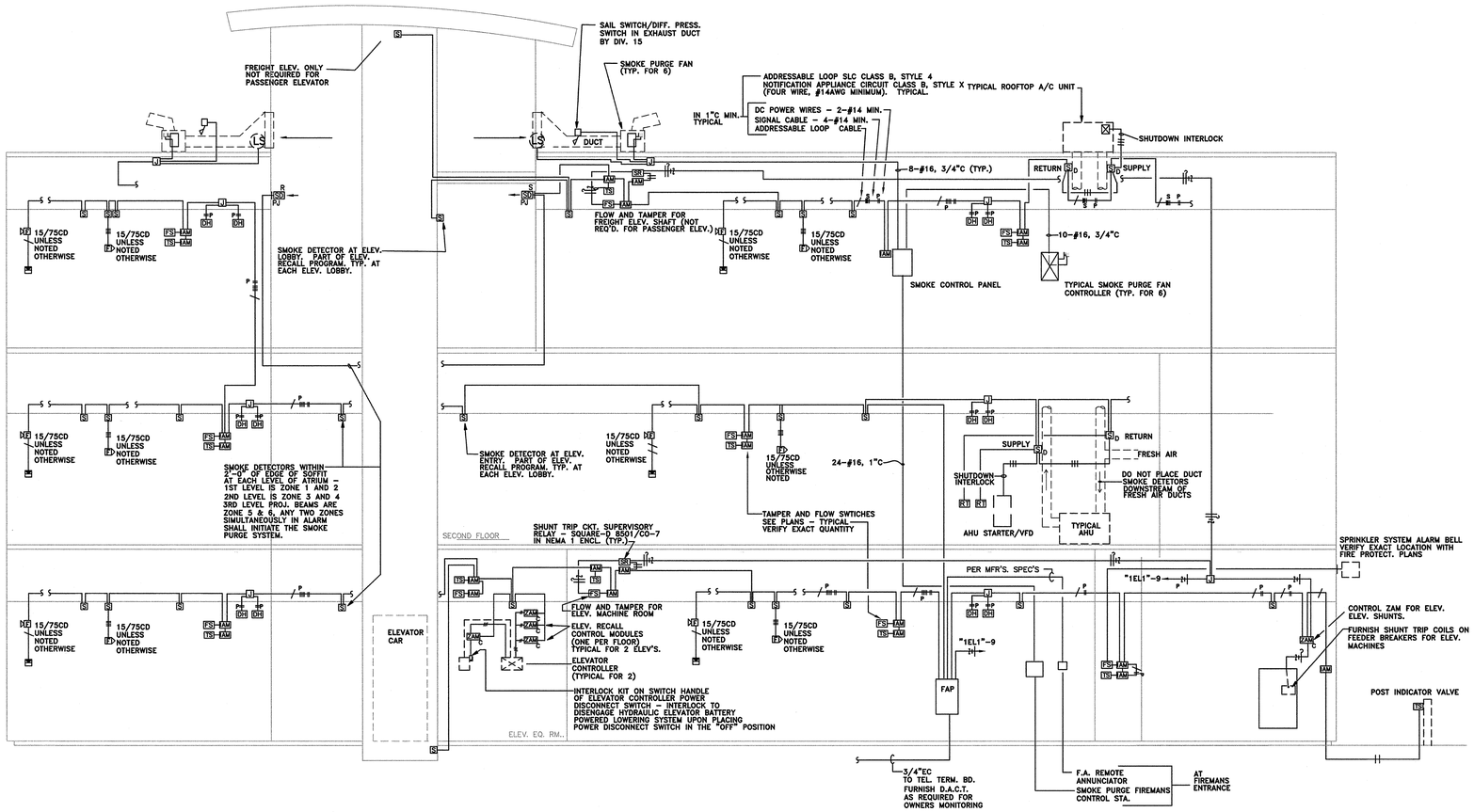

2 FIRE ALARM SYSTEM RISER DIAGRAM

N.T.S.

NOTE:
CONTRACTOR TO PROVIDE COMPLESTE SCHEDULE OF DEVICE ADDRESS WITH SHOP DRAWINGS FOR REVIEW AND APPROVAL

TYPICAL FIRE ALARM SYSTEM NOTES

1. FIRE ALARM SYSTEM TO BE INSTALLED PER APPROVED SHOP DRAWINGS FURNISHED BY F.A. VENDOR
2. FIRE PROTECTION RISER FOR REFERENCE ONLY. VERIFY ALL FLOW/TAMPER SW AND OTHER DEVICE QUANTITIES AND LOCATIONS WTH APPROVED FIRE PROTECTION SYSTEM SHOP DRAWINGS
3. ACTIVATION OF ANY SMOKE DETECTOR AT THE ELEVATOR LOBBIES AND OR WTHIN THE ELEV. EQUIP. ROOM OR ELEV. SHAFT (FREIGHT ELEV.'S ONLY) SHALL CAUSE THE ELEVATOR CAR TO BE RECALLED TO THE NON–FIRE FLOOR. REFER TO THE SPECIFICATIONS
4. FIRE PROTECTION–ELEVATOR INTERLOCKS

   ACTIVATION OF ANY FLOW SWITCH DEDICATED TO THE ELEVATOR SHAFT AND/OR ELEVATOR EQUIP. ROOM SHALL:

   A. INITIATE THE SHUNT TRIP CONTROL ZAM'S TO TRIP THE CIRCUIT BREAKERS SUPPLING POWER TO THE ELEVATOR MACHINES.

   B. INITIATE CONTROL ZAM SERIES CONNECTED IN THE ELEVATOR DC POWERED LOWERING SYSTEM TO DISABLE THE ELEVATOR LOWERING SYSTEM. SERIES WIRE THIS CIRCUIT THRU N.C. AUXILLARY CONTACTS ON THE ELEV. POWER AND CONTROL DISCONNECT SWTICHES.

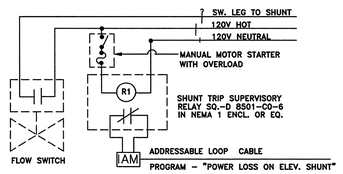

SHUNT POWER SUPERVISORY RELAY DETAIL

N.T.S.

DONALD W. REYNOLDS CENTER FOR HEALTH SCIENCES

ARKANSAS STATE UNIVERSITY

JONESBORO, ARKANSAS

BRACKETT KRENNERICH architects

100 East Huntington, Suite D P.O. Box 1655 Jonesboro, Arkansas 72403-1655

870-932-0571 Fax:870-932-0975 www.bkarchts.com

Commission Number 12406

E503

Date: JANUARY 25, 2008

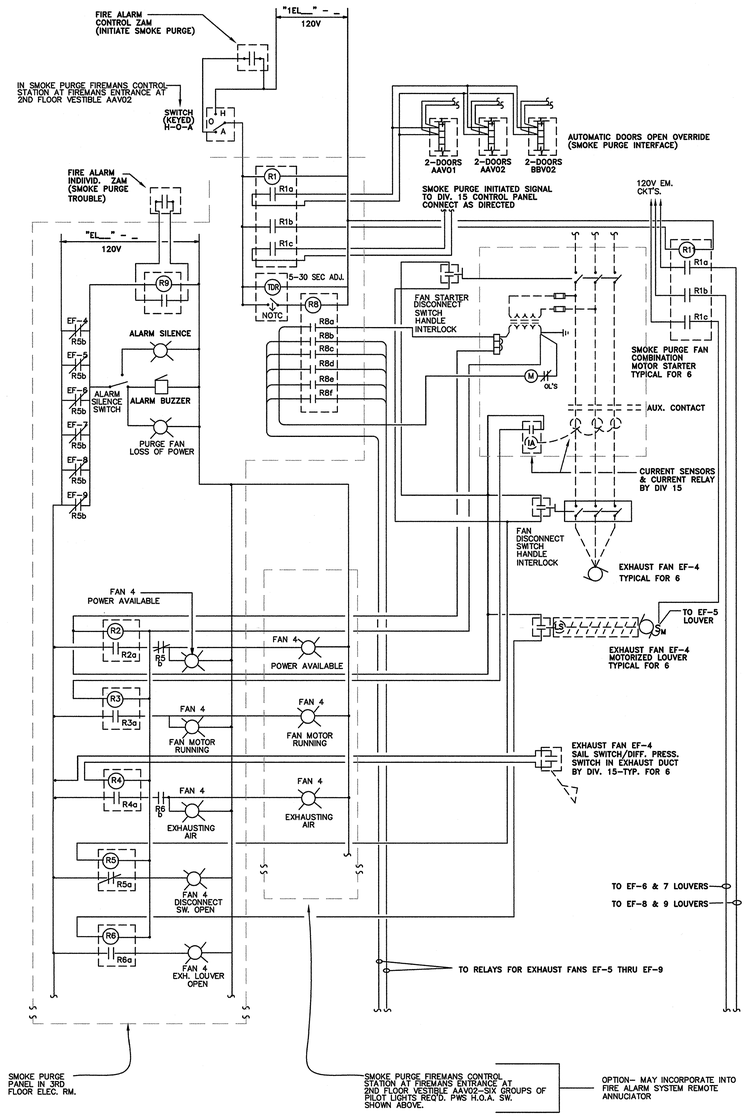

SMOKE PURGE SEQUENCE:

1. F.A. SYSTEM SENSES SMOKE IN ANY 2 OF THE MAIN LOBBY F.A. ZONES.
2. F.A. SYSTEM SIGNALS ALL MAGNETIC DOOR HOLDERS TO RELEASE.
3. F.A. SYSTEM SIGNALS ALL AHU'S TO STOP AND ALL SMOKE DAMPERS TO CLOSE.
4. F.A. SYSTEM CONTROL ZAM INITATES SMOKE PURGE PANEL.
5. ALL AUTOMATIC EXTERIOR DOORS "OPEN" OVERRIDE SIGNALS INITIATED AND DOORS HELD OPEN..
6. ALL PURGE FAN MOTORIZED EXHAUST LOUVERS OPEN
7. AFTER 15 SEC. TIME DELAY, PURGE FAN STARTERS INITIATED

SMOKE PURGE SYSTEM CONTROL WIRING DIAGRAM

NOT TO SCALE

DONALD W. REYNOLDS CENTER FOR HEALTH SCIENCES
ARKANSAS STATE UNIVERSITY
JONESBORO, ARKANSAS

BRACKETT KRENNERICH architects
100 East Huntington, Suite D P.O. Box 1655 Jonesboro, Arkansas 72403-1655
870-932-0571 Fax 870-932-0975 www.bkarchts.com

Commission Number 12406

E504

Date: JANUARY 25, 2008

PANELBOARD: MDP

VOLTAGE: 480Y277V,30,4W | BUS RATING: 1200A | MAIN: MLO | TOTAL CONNECTED VA: 963693
LOCATION: ELECT. 182A | MFG. AND TYPE: SQ.D I-LINE | EQUIP. GRD. BUS: YES | ISOL. GRD. BUS: | TOTAL A Ø : 335879
MOUNTING: SURFACE | ENCLOSURE: NEMA 1 | MINIMUM A.I.C. RATING: 35000 | FED FROM: CW&L TRF. | TOTAL B Ø : 319484 | TOTAL C Ø : 308330

LOAD (VA) AØ	BØ	CØ	SERVES	P/T	CIR. NO.	CIR. NO.	P/T	SERVES	LOAD (VA) AØ	BØ	CØ
72550			PANEL 2HDP	3	1	2	3	SPACE			
	72270		———		3	4		———			
		70320	———	/350	5	6	/250	———			
54375			PANEL 1MH1	3	7	8	3	PANEL 3HDP	71880		
	51888		———		9	10		———		71830	
		49348	———	/300	11	12	/250	———			66280
67500			ATS	3	13	14	3	PANEL 1HDP	69574		
	57670		———		15	16		———		65826	
		56260	———	/400	17	18	/250	———			66122
			TVSS	3	19	20					
			———		21	22					
			———	/150	23	24					
					25	26					
					27	28					
					29	30					
					31	32					
					33	34					
					35	36					
					37	38					
					39	40					
					41	42					

PANELBOARD: 1HDP

VOLTAGE: 480Y277V,3Ø,4W | BUS RATING: 400A | MAIN: MAIN LUGS ONLY | TOTAL CONNECTED VA: 20522
LOCATION: ELECT. | MFG. AND TYPE: SQ.D NF | EQUIP. GRD. BUS: YES | ISOL. GRD. BUS: NO | TOTAL A Ø : 69574
MOUNTING: SURFACE | ENCLOSURE: NEMA 1 | MINIMUM A.I.C. RATING: | FED FROM: MDP | TOTAL B Ø : 65826 | TOTAL C Ø : 66122

LOAD (VA) AØ	BØ	CØ	SERVES	P/T	CIR. NO.	CIR. NO.	P/T	SERVES	LOAD (VA) AØ	BØ	CØ
14574			PANEL 1HN1	3	1	2					
	10826		———		3	4					
		11122	———	/100	5	6					
15000			TRF T1LN2	3	7	8					
	15000		———		9	10					
		15000	———	/70	11	12					
25000			TRF T1LN1	3	13	14					
	25000		———		15	16					
		25000	———	/100	17	18					
15000			TRF T1LC1	3	19	20					
	15000		———		21	22					
		15000	———	/70	23	24					
					25	26					
					27	28					
					29	30					
					31	32					
					33	34					
					35	36					
					37	38					
					39	40					
					41	42					

PANELBOARD: 2HDP

VOLTAGE: 480Y277V,3Ø,4W | BUS RATING: 400A | MAIN: MAIN LUGS ONLY | TOTAL CONNECTED VA: 215140
LOCATION: ELECT. RM. 213 | MFG. AND TYPE: SQ.D NF | EQUIP. GRD. BUS: YES | ISOL. GRD. BUS: NO | TOTAL A Ø : 72550
MOUNTING: SURFACE | ENCLOSURE: NEMA 1 | MINIMUM A.I.C. RATING: | FED FROM: MDP | TOTAL B Ø : 72270 | TOTAL C Ø : 70320

LOAD (VA) AØ	BØ	CØ	SERVES	P/T	CIR. NO.	CIR. NO.	P/T	SERVES	LOAD (VA) AØ	BØ	CØ
7550			PANEL 2HN1	3	1	2	3	TRF 2LN1	10,000		
	7270		———		3	4		———		10,000	
		5320	———	/70	5	6	/45	———			10,000
5000			TRF T2LC1	3	7	8	3	TRF 2LN1	25,000		
	5000		———		9	10		———		25,000	
		5000	———	/25	11	12	/100	———			25,000
25000			TRF T2LC2	3	13	14		SPACE			
	25000		———		15	16					
		25000	———	/100	17	18					
			SPACE		19	20					
					21	22					
					23	24					
					25	26					
					27	28					
					29	30					
					31	32					
					33	34					
					35	36					
					37	38					
					39	40					
					41	42					

PANELBOARD: 3HDP

VOLTAGE: 480Y277V,3Ø,4W | BUS RATING: 400A | MAIN: LUGS ONLY | TOTAL CONNECTED VA: 209990
LOCATION: ELECT. RM. 314 | MFG. AND TYPE: SQ.D NF | EQUIP. GRD. BUS: | ISOL. GRD. BUS: | TOTAL A Ø : 71880
MOUNTING: SURFACE | ENCLOSURE: NEMA 1 | MINIMUM A.I.C. RATING: | FED FROM: MDP | TOTAL B Ø : 71830 | TOTAL C Ø : 66280

LOAD (VA) AØ	BØ	CØ	SERVES	P/T	CIR. NO.	CIR. NO.	P/T	SERVES	LOAD (VA) AØ	BØ	CØ
10000			TRF T3LN1	3	1	2		SPACE			
	10000		———		3	4					
		10000	———	/45	5	6					
11880			PANEL 3HN1	3	7	8					
	11830		———		9	10					
		6280	———	/70	11	12					
25000			TRF T3LN2	3	13	14					
	25000		———		15	16					
		25000	———	/100	17	18					
25000			TRF T3LC1	3	19	20					
	25000		———		21	22					
		25000	———	/100	23	24					
					25	26					
					27	28					
					29	30					
					31	32					
					33	34					
					35	36					
					37	38					
					39	40					
					41	42					

PANELBOARD: 1HN1

VOLTAGE: 480Y277V | BUS RATING: 125 | MAIN: LUGS ONLY | TOTAL CONNECTED VA: 36522
LOCATION: 1ST FLOOR ELECTRICAL 149 | MFG. AND TYPE: SQ.D NF | EQUIP. GRD. BUS: YES | ISOL. GRD. BUS: NO | TOTAL A Ø : 14574
MOUNTING: SURFACE | ENCLOSURE: NEMA 1 | MINIMUM A.I.C. RATING: 18,000 | FED FROM: 1HDP | TOTAL B Ø : 10826 | TOTAL C Ø : 11122

LOAD (VA) AØ	BØ	CØ	SERVES	P/T	CIR. NO.	CIR. NO.	P/T	SERVES	LOAD (VA) AØ	BØ	CØ
3630			LGTS AUDIO/COMM./REHAB	1/20	1	2	1/20	LGTS. DIRECTOR/WAIT/LIB/FLES	3460		
	2170		LGTS-CORRAA/BB/CC/DD10C		3	4	1/20	LGTS. ENTRY CANOPY/COURT		1000	
		2860	LGTS-CORR FFC01/AALO1/AAV01	40	5	6	1/20	LGTS. ENTRY CANOPY			3800
2000			LGTS-SITE	3	7	8	1/20	LGTS. RESEARCH EAST	1360		
	2000		LGTS-SITE		9	10	1/20	LGTS. RESEARCH WEST		2640	
		2000	LGTS-SITE	/20	11	12	1/20	SPARE			
			SPACE		13	14	1/20	SPARE			
					15	16	1/20	SPARE			
					17	18	1/20	SPARE			
					19	20	1/20	SPARE			
					21	22	1/20	SPARE			
					23	24	1/20	SPARE			
					25	26	1/15	FAN BOXES	1662		
					27	28	1/15	FAN BOXES		2216	
					29	30	1/15	✓ ✓ ✓			1662
					31	32	1/15	✓ ✓ ✓	1662		
					33	34	1/20	AIR TERMINALS		800	
					35	36	1/20	✓			800
					37	38	1/20	✓	800		
					39	40		SPACE			
					41	42					

PANELBOARD: 2HN1

VOLTAGE: 480Y277V,3Ø,4W | BUS RATING: 125A | MAIN: | TOTAL CONNECTED VA: 20180
LOCATION: ELECT. RM. 219 | MFG. AND TYPE: SQ.D NF | EQUIP. GRD. BUS: YES | ISOL. GRD. BUS: NO | TOTAL A Ø : 7550
MOUNTING: SURFACE | ENCLOSURE: NEMA 1 | MINIMUM A.I.C. RATING: 18,000 | FED FROM: 2HDP | TOTAL B Ø : 7270 | TOTAL C Ø : 5360

LOAD (VA) AØ	BØ	CØ	SERVES	P/T	CIR. NO.	CIR. NO.	P/T	SERVES	LOAD (VA) AØ	BØ	CØ
3240			CORR. AAC02/TLTS/?/ST.L.	1/20	1	2	1/20	LGTS. SOUTH END OFF	2510		
	2910		LGTS-LOBBY AALO2/CONF	1/20	3	4	1/20	LGTS.-SOUTH END OFF		2160	
		2680	LGTS-TYPE H CR 222	1/20	5	6	1/20	SPARE			
1800			LGTS-DOWNS CR 222 , 216	1/20	7	8	1/20	SPARE			
	2200		LGTS-TYPE H CR 216	1/20	9	10	1/20	SPARE			
		2680	LGTS-TYPE H CR 214	1/20	11	12		SPACE			
			SPACE		13	14					
					15	16					
					17	18					
					19	20					
					21	22					
					23	24					
					25	26					
					27	28					
					29	30					
					31	32					
					33	34					
					35	36					
					37	38					
					39	40					
					41	42					

PANELBOARD: 3HN1

VOLTAGE: 480Y277V | BUS RATING: 125 | MAIN: LUGS ONLY | TOTAL CONNECTED VA: 23490
LOCATION: 1ST FLOOR ELECTRICAL 314 | MFG. AND TYPE: SQ.D NF | EQUIP. GRD. BUS: YES | ISOL. GRD. BUS: NO | TOTAL A Ø : 11660
MOUNTING: SURFACE | ENCLOSURE: NEMA 1 | MINIMUM A.I.C. RATING: 18,000 | FED FROM: 1HDP | TOTAL B Ø : 11830 (43) | TOTAL C Ø : 6280

LOAD (VA) AØ	BØ	CØ	SERVES	P/T	CIR. NO.	CIR. NO.	P/T	SERVES	LOAD (VA) AØ	BØ	CØ
3830			LGTS. CORR./TLTS/325	1/20	1	2	1/20	LGTS. – 324	3830		
	3830		LGTS-329/321	1/20	3	4	1/20	LGTS. -324A-D/322/320		3000	
		2280	LGTS-331	1/20	5	6	1/20	LGTS. -LOBBY			2000
2000			LGTS-AALO3	1/20	7	8	1/20	✓ ✓	2000		
	2000		✓ ✓	1/20	9	10	1/20	LGTS. 303/OFF'S/		3000	
			SPARE	1/20	11	12	1/20	LGTS. C.R. 307			2000
			SPARE	1/20	13	14	1/20	SPARE			
			SPARE	1/20	15	16	1/20	SPARE			
			SPARE	1/20	17	18	1/20	SPARE			
					19	20					
					21	22					
					23	24					
					25	26					
					27	28					
					29	30					
					31	32					
					33	34					
					35	36					
					37	38					
					39	40					
					41	42					

SECTION 1 MAIN LUGS ONLY

PANELBOARD: 1LN1

VOLTAGE: 208Y120V,3Ø,4W | BUS RATING: 225A | MAIN: 225A 3P MCB W/FEED THRU LUGS | TOTAL CONNECTED VA: 57596
LOCATION: ELECT. RM. 182A | MFG. AND TYPE: SQ.D NQOD | EQUIP. GRD. BUS: YES | ISOL. GRD. BUS: NO | TOTAL A Ø : 19500
MOUNTING: SURFACE | ENCLOSURE: NEMA 1 | MINIMUM A.I.C. RATING: 10,000 | FED FROM: TRF T1LN1 | TOTAL B Ø : 20176 (168) | TOTAL C Ø : 17920

LOAD (VA) AØ	BØ	CØ	SERVES	P/T	CIR. NO.	CIR. NO.	P/T	SERVES	LOAD (VA) AØ	BØ	CØ
1200			REC'S LAB 177	1/20	1	2	1/20	REC'S -182/182A/177A	1200		
	1200		✓ ✓ ✓	1/20	3	4	1/20	✓ ✓ ✓		1200	
		1200	✓ ✓ ✓	1/20	5	6	1/20	✓ ✓ ✓			1000
1200			REC LAB 177	1/20	7	8	2	TREADMILL	1200		
	1200		✓ ✓ ✓	1/20	9	10	/20	✓ ✓ ✓		1200	
		1200	✓ ✓ ✓	1/20	11	12	2	TREADMILL			1200
1200			REC'S LAB 177	1/20	13	14	/20	✓ ✓ ✓	1200		
	1200		✓ ✓ ✓	1/20	15	16	2	TREADMILL		1200	
		1200	✓ ✓ ✓	1/20	17	18	/20	✓ ✓ ✓			1200
1200			REC'S LAB 177	1/20	19	20	1/20	REC'S LAB 175	1200		
	1200		✓ ✓ ✓	1/20	21	22	1/20	✓ ✓ ✓		1200	
		1200	REC'S -CORR.	1/20	23	24	1/20	✓ ✓ ✓			1200
1200			REC'S -175	1/20	25	26	1/20	REC'S LAB 175	1200		
	1200		REC'S -149/171/171A/175B	1/20	27	28	1/20	✓ ✓ ✓		1200	
		1200	REC'S -OFF. 180/178	1/20	29	30	1/20	✓ ✓ ✓			1200
1200			REC'S -OFF. 178/176/170	1/20	31	32	1/20	REC'S LAB 171	1200		
	1200		REC'S -CORR/LOBBY/ELEV	1/20	33	34	1/20	✓ ✓ ✓		1200	
		800	REC'S -VEST. EXIT ENTRY	1/20	35	36	1/20	✓ ✓ ✓			800
1000			REC'S -EXT. ENTRY	1/20	37	38	1/20	REC'S LAB	1200		
	176		EXH. FAN EF-1 & UH-1	1/20	39	40	1/20	REC'S LAB 171		1200	
		120	CABINET HTR CH-1	1/20	41	42	1/20	REC'S FLOOR-LOBBY			800

SECTION 2

PANELBOARD: 1LN1

VOLTAGE: 208Y120V,3Ø,4W | BUS RATING: 225A | MAIN: MAIN LUGS ONLY | TOTAL CONNECTED VA: *
LOCATION: ELECT. RM. 182A | MFG. AND TYPE: SQ.D NQOD | EQUIP. GRD. BUS: YES | ISOL. GRD. BUS: NO | TOTAL A Ø : *
MOUNTING: SURFACE | ENCLOSURE: NEMA 1 | MINIMUM A.I.C. RATING: 10,000 | FED FROM: SECTION 1 | TOTAL B Ø : * | TOTAL C Ø : *

LOAD (VA) AØ	BØ	CØ	SERVES	P/T	CIR. NO.	CIR. NO.	P/T	SERVES	LOAD (VA) AØ	BØ	CØ
500			GFI REC. @ GENERATOR	1/20	43	44	1/20	AUTO-VALVES @ TOILET	200		
	1200		REC.-LAB 177	1/20	45	46	3	WH-2 6KW/208		2000	
		400	LGTS – ELEV. SHAFT	1/20	47	48		———			2000
200			AIR PRESSURE ALARM PANEL		49	50	/25	———	2000		
			SPARE	1/20	51	52	1/20	H.W. CIRC. PUMP # 2		1200	
			SPARE	1/20	53	54	1/20	H.W. ✓ ✓ # 1			1200
			SPARE	1/20	55	56	1/20	SPARE			
			SPARE	1/20	57	58	1/20	SPARE			
			SPARE	1/20	59	60	1/20	SPARE			
			SPARE	1/20	61	62	1/20	SPARE			
			SPARE	1/20	63	64	1/20	SPARE			
			SPARE	1/20	65	66	1/20	SPARE			
			SPACE		67	68		SPACE			
					69	70					
					71	72					
					73	74					
					75	76					
					77	78					
					79	80					
					81	82					
					83	84					

SECTION 1

PANELBOARD: 1LN2

VOLTAGE: 208Y120V,3Ø,4W | BUS RATING: 225A | MAIN: 150A/3P MCB W/FEED THRU LUGS | TOTAL CONNECTED VA: 34620
LOCATION: ELECT. RM. 149 | MFG. AND TYPE: SQ.D NQOD | EQUIP. GRD. BUS: YES | ISOL. GRD. BUS: | TOTAL A Ø : 11320
MOUNTING: SURFACE | ENCLOSURE: NEMA 1 | MINIMUM A.I.C. RATING: 10,000 | FED FROM: TRF. T1LN2 | TOTAL B Ø : 11400 | TOTAL C Ø : 11900

LOAD (VA) AØ	BØ	CØ	SERVES	P/T	CIR. NO.	CIR. NO.	P/T	SERVES	LOAD (VA) AØ	BØ	CØ
1200			REC'S 149,158,160	1/20	1	2	1/20	REC'S 147	1200		
	1200		✓ 162,164,166	1/20	3	4	/20	REC'S 102,101		1200	
		1500	EWC-LOBBY	1/20	5	6	1/20	REC'S COPIER/FAX 147			1200
1000			REC'S – 151,153	1/20	7	8	1/20	REC'S 103,101	1200		
	1200		REC'S – 151,153	1/20	9	10	1/20	✓ – 145		1200	
		1200	REC'S – 157B,153,135	1/20	11	12	1/20	✓ – TV 101			1200
800			REC'S – 157	1/20	13	14	1/20	REC'S CORR. 107,109,111	1200		
	1200		✓ 157	1/20	15	16	1/20	✓ – 105,103		1200	
		1200	✓ 157	1/20	17	18	1/20	REC'S 108,106,112,110,133			1200
1000			REC'S – 144,142,140,138,136	1/20	19	20	1/20	✓ CORR., 131,129,127	800		
	1000		✓ 134,132,130,128, CORR.	1/20	21	22		✓ CORR., 113,115,117,119		1200	
		1000	✓ 144	1/20	23	24		✓ – 121,CORR.,122			1000
800			REC'S – 123	1/20	25	26		✓ – 122	800		
	1000		✓ 123 DISHWASHER	1/20	27	28		REC'S 124		1000	
		1200	✓ 123	1/20	29	30		———			1200
120			CABINET HTR CH-1	1/15	31	32		✓ ✓ DISHWASHER	1200		
	500		TLT. AUTOMATIC VALVES	1/20	33	34	1/20	SPARE			
			SPARE	1/20	35	36	1/20	SPARE			
			SPARE	1/20	37	38	1/20	SPARE			
			SPARE	1/20	39	40	1/20	SPARE			
			SPARE	1/20	41	42	1/20	SPARE			

SECTION 2

PANELBOARD: 1LN2

VOLTAGE: 208Y120V,3Ø,4W | BUS RATING: | MAIN: MAIN LUGS ONLY | TOTAL CONNECTED VA: *
LOCATION: ELECT. RM. 149 | MFG. AND TYPE: SQ.D NQOD | EQUIP. GRD. BUS: YES | ISOL. GRD. BUS: NO | TOTAL A Ø : *
MOUNTING: SURFACE | ENCLOSURE: NEMA 1 | MINIMUM A.I.C. RATING: 10,000 | FED FROM: SECTION 1 | TOTAL B Ø : * | TOTAL C Ø : *

LOAD (VA) AØ	BØ	CØ	SERVES	P/T	CIR. NO.	CIR. NO.	P/T	SERVES	LOAD (VA) AØ	BØ	CØ
			SPACE		43	44		SPACE			
					45	46					
					47	48					
					49	50					
					51	52					
					53	54					
					55	56					
					57	58					
					59	60					
					61	62					
					63	64					
					65	66					
					67	68					
					69	70					
					71	72					
					73	74					
					75	76					
					77	78					
					79	80					
					81	82					
					83	84					

PANELBOARD: 2LN1

VOLTAGE: 208Y120V,3Ø,4W | BUS RATING: 225A | MAIN: 125A/3P MCB | TOTAL CONNECTED VA: 17278
LOCATION: ELECT. RM. 213A | MFG. AND TYPE: SQ.D NQOD | EQUIP. GRD. BUS: YES | ISOL. GRD. BUS: | TOTAL A Ø : 6400 (53)
MOUNTING: SURFACE | ENCLOSURE: NEMA 1 | MINIMUM A.I.C. RATING: 10,000 | FED FROM: TRF. T2LN1 | TOTAL B Ø : 6078 | TOTAL C Ø : 4800

LOAD (VA) AØ	BØ	CØ	SERVES	P/T	CIR. NO.	CIR. NO.	P/T	SERVES	LOAD (VA) AØ	BØ	CØ
1200			REC'S 202/V202/L202/EXT.	1/20	1	2	1/20	RECS – 213A/202/211H	1200		
	1200		✓ CORR./123	1/20	3	4	1/20	✓ 211H/211J		1200	
		1200	✓ 203/CORR./208	1/20	5	6	1/20	✓ 211J/212/210			1200
1200			REC 25/211A	1/20	7	8	1/20	RECS – 211G/211	1200		
	1200		✓ 205/204/206/208	1/20	9	10	1/20	✓ 211F/211E		1200	
		1200	✓ 211A/211B	1/20	11	12	1/20	✓ 211D/C			1200
400			REC 211 COUNT ON	1/20	13	14	1/20	✓ 211C/B/211	1200		
	1200		EWC BBLO2	1/20	15	16	1/20	SPARE		78	
			SPARE	1/20	17	18	1/20	SPARE			
			SPARE	1/20	19	20	1/20	SPARE			
			SPARE	1/20	21	22	1/20	SPARE			
			SPARE	1/20	23	24	1/20	SPARE			
			SPACE		25	26		SPACE			
					27	28					
					29	30					
					31	32					
					33	34					
					35	36					
					37	38					
					39	40					
					41	42					

DONALD W. REYNOLDS CENTER FOR HEALTH SCIENCES

ARKANSAS STATE UNIVERSITY
JONESBORO, ARKANSAS

BRACKETT KRENNERICH architects
100 East Huntington, Suite D P.O. Box 1655 Jonesboro, Arkansas 72403-1655
870-932-0571 Fax 870-932-0975 www.bkarchts.com

Commission Number 12406

E601

Date: JANUARY 25, 2008

PANELBOARD: 2LN2 | VOLTAGE: 208Y120V,3Ø,4W | BUS RATING: 225A | MAIN: 225A MCB W/FEED THRU LUGS | TOTAL CONNECTED VA: 30200
LOCATION: ELECT. RM. 219 | MFG. AND TYPE: SQ-D NQOD | EQUIP. GRD. BUS: YES | ISOL. GRD. BUS: | TOTAL A Ø : 10478 | TOTAL B Ø : 10600 (88A)
MOUNTING: SURFACE | ENCLOSURE: NEMA 1 | MINIMUM A.I.C. RATING: 10,000 | FED FROM: TRF T2NL2 IN ELEC. RM 213A | TOTAL C Ø : 9700

AØ	BØ	CØ	SERVES	P/T	CIR. NO.	CIR. NO.	P/T	SERVES	AØ	BØ	CØ
1000			PROJ. SCREEN-222	1/20	1	2	1/20	RECS - 223	800		
	1000		REC'S - 222	1/20	3	4	1/20	✓ ✓		800	
		1200	✓ EXTERIOR/CORR.	1/20	5	6	1/20	✓ 223 TV			500
1200			✓ 222/216	1/20	7	8	1/20	REC'S - 219/217/223	1200		
	1000		PROJ. SCREEN-216	1/20	9	10	1/20	✓ 223 TV		500	
		1200	REC'S - 216/214	1/20	11	12	1/20	✓ EXT. PATIO			1600
1000			PROJ. SCREEN-214	1/20	13	14	1/20	REC'S - CORR./224/LOBBY/VEST.	1200		
	1600		WINDOW BLIND CONTROL 222/216	1/20	15	16	1/20	✓ 225/228/LOBBY/VEST.		1200	
		1000	WIREWAY-VENDING 223A	2/	17	18	1/20	✓ LOBBY EWC			1200
1000			✓ ✓ ✓	/20	19	20	1/20	EXH. FAN EF-2	78		
	1000		✓ ✓ ✓	1/20	21	22	1/20	AUTO VALVES-LAVATORY		500	
		1000	WIREWAY-VENDING 223A	2/	23	24	1/20	SPARE			
1000			✓ ✓ ✓	/20	25	26	1/20				
	1000		✓ ✓ ✓	1/20	27	28	1/20				
		1000	WIREWAY-VENDING 223A	2/	29	30	1/20				
1000			✓ ✓ ✓	/20	31	32	1/20				
	1000		✓ ✓ ✓	1/20	33	34	1/20				
		1000	WIREWAY-VENDING 223A	1/	35	36		SPACE			
1000			✓ ✓ ✓	/20	37	38		SPACE			
	1000		✓ ✓ ✓	1/20	39	40		SPACE			
					41	42		SPACE			

PANELBOARD: 3LN1 | VOLTAGE: 208Y120V,3Ø,4W | BUS RATING: 225A | MAIN: 125A 3P MCB | TOTAL CONNECTED VA: 14300
LOCATION: ELECT. RM. 314 | MFG. AND TYPE: SQ-D NQOD | EQUIP. GRD. BUS: YES | ISOL. GRD. BUS: | TOTAL A Ø : 5900 | TOTAL B Ø : 4400
MOUNTING: SURFACE | ENCLOSURE: NEMA 1 | MINIMUM A.I.C. RATING: 10,000 | FED FROM: TRF. T3LN1 | TOTAL C Ø : 4000

AØ	BØ	CØ	SERVES	P/T	CIR. NO.	CIR. NO.	P/T	SERVES	AØ	BØ	CØ
1200			REC'S - 318/316	1/20	1	2	1/20	WINDOW BLINDS - 307	1600		
	1200		REC'S - 312/310/CORR.	1/20	3	4	1/20	PROJ. SCREEN - 307		800	
		1200	✓ - 313/307/315	1/20	5	6	1/20	PROJ. SCREEN - 303			800
1000			✓ - 310/308	1/20	7	8	1/20	EXH. FAN HOUSE KEEPING	78		
	1200		REC'S - 308/CORR./305/303	1/20	9	10	1/20	SPARE			
		1000	REC'S - CORR./302/LOBBY	1/20	11	12	1/20				
1000			✓ - 305	1/20	13	14	1/20				
	1200		REC'S - 307/303A/303	1/20	15	16	1/20				
		1000	✓ - 303	1/20	17	18	1/20				
1000			✓ - 303	1/20	19	20	1/20				
			SPACE		21	22		SPACE			
					23	24					
					25	26					
					27	28					
					29	30					
					31	32					
					33	34					
					35	36					
					37	38					
					39	40					
					41	42					

SECTION 1

PANELBOARD: 3LN2 | VOLTAGE: 208Y120V,3Ø,4W | BUS RATING: 225A | MAIN: 125A/3P MCB W/FEED THRU LUGS | TOTAL CONNECTED VA: 67700
LOCATION: ELECT. RM. 323 | MFG. AND TYPE: SQ-D NQOD | EQUIP. GRD. BUS: YES | ISOL. GRD. BUS: NO | TOTAL A Ø : 22600 189A | TOTAL B Ø : 22700
MOUNTING: SURFACE | ENCLOSURE: NEMA 1 | MINIMUM A.I.C. RATING: 10,000 | FED FROM: TRF. T3LN2 | TOTAL C Ø : 22400

AØ	BØ	CØ	SERVES	P/T	CIR. NO.	CIR. NO.	P/T	SERVES	AØ	BØ	CØ
1200			RECEPTS - MENS 332	1/20	1	2	1/20	RECS - 325A/325	1200		
	1200		✓ - LOBBY EWC	1/20	3	4	1/20	✓ - 325		1200	
		1200	REC'S - 323/CORR./320/LOBBY	1/20	5	6	1/20	RECS - 329			1200
1200			✓ - 320	1/20	7	8	1/20	✓ ✓	1200		
	1200		✓ - 320	1/20	9	10	1/20	✓ ✓		1200	
		2000	208V - RECEPT - 320	2/	11	12	1/20	RECS - 329A/329/CORR.			1200
2000			—	/30	13	14	1/20	✓ - CORR./331	1200		
	1000		RECEPTS - 320	1/20	15	16	1/20	✓ - 331/CORR./324		1200	
		1000	✓ - 320	1/20	17	18	1/20	RECS - 324			1200
1000			✓ - 320A	1/20	19	20	1/20	RECS - 324	1200		
	800		RECEPTS - 322A	1/20	21	22	1/20	✓ ✓		1200	
		1000	✓ - ✓	1/20	23	24	1/20	✓ ✓			1200
1000			✓ - ✓	1/20	25	26	2/	ICU - HEADWALL	1000		
	1000		REC'S - 322	1/20	27	28	/20	✓		1000	
		1200	~~✓ ✓~~	1/20	29	30	2/	MATERNITY - HEADWALL			1000
1200			REC'S - 322	1/20	31	32	/20	✓	1000		
	1200		✓ ✓	1/20	33	34		RECS - 325/324A/324B		1200	
		1200	✓ ✓	1/20	35	36		RECS - NON 150-ICU H.W.			400
1200			REC'S - 320A	1/20	37	38					
	1200		✓ ✓	1/20	39	40		RECS - 324		1200	
		1200	✓ - 324D	1/20	41	42		✓ ✓			1200

SECTION 2

PANELBOARD: 3LN2 | VOLTAGE: 208Y120V,30,4W | BUS RATING: 225A | MAIN: MLO | TOTAL CONNECTED VA: 12000
LOCATION: ELECT. RM. 323 | MFG. AND TYPE: SQ-D NQOD | EQUIP. GRD. BUS: YES | ISOL. GRD. BUS: NO | TOTAL A Ø : 4800 | TOTAL B Ø : 3200
MOUNTING: SURFACE | ENCLOSURE: NEMA 1 | MINIMUM A.I.C. RATING: 10,000 | FED FROM: | TOTAL C Ø : 4000

AØ	BØ	CØ	SERVES	P/T	CIR. NO.	CIR. NO.	P/T	SERVES	AØ	BØ	CØ
1200			REC'S 324	1/20	43	44	1/20	PROJ. SCREEN 325	1000		
				1/20	45	46	1/20	BLIND CONTROLS 325		1000	
				1/20	47	48	1/20	BLIND CONTROLS 329			1000
1200			REC'S 324/HALL/324B	1/20	49	50	1/20	PROJ. SCREEN 329	1000		
	1200		✓	1/20	51	52	1/20	PROJ. SCREEN 331		1000	
		2000	✓	1/20	53	54	1/20	BLIND CONTROLS 331			1000
1200			-	1/20	55	56	1/20	ROOFTOP RECEPTS	400		
	1200		-	1/20	57	58	1/20	TOWEL DISPENSER 324		500	
		1200	-	1/20	59	60	1/20	TOWEL DISPENSER 324			500
500			PROJECT SCREEN-324	1/20	61	62	1/20	SINK VALVES-324	500		
	1500		EWC-CORR. AA03	1/20	63	64	1/20	SINK VALVES-TLTS		500	
			SPARE	1/20	65	66	1/20	LGTS - 324B (SKYTRON)			500
				1/20	67	68	1/20	SPARE			
				1/20	69	70	1/20				
				1/20	71	72	1/20				
				1/20	73	74	1/20				
				1/20	75	76	1/20				
				1/20	77	78	1/20				
			SPACE		79	80		SPACE			
					81	82					
					83	84					

PANELBOARD: 1LC1 | VOLTAGE: 208Y120V,3Ø,4W | BUS RATING: 225A | MAIN: 150A/3P MCB | TOTAL CONNECTED VA: 25200
LOCATION: ELECT. RM. 182A | MFG. AND TYPE: SQ-D NQOD | EQUIP. GRD. BUS: YES | ISOL. GRD. BUS: NO | TOTAL A Ø : 9200 | TOTAL B Ø : 8800
MOUNTING: SURFACE | ENCLOSURE: NEMA 1 | MINIMUM A.I.C. RATING: 10,000 | FED FROM: TRF. T1LC1 | TOTAL C Ø : 7200

AØ	BØ	CØ	SERVES	P/T	CIR. NO.	CIR. NO.	P/T	SERVES	AØ	BØ	CØ
1200			REC'S - 177/175	1/20	1	2	1/20	REC'S -180,178,170	1200		
	1200		✓ - 175	1/20	3	4	1/20	WIRELESS RECIEVERS		400	
		1200	✓ - 177	1/20	5	6	1/20	SPARE			
			SPARE	1/20	7	8	1/20				
				1/20	9	10	1/20				
				1/20	11	12	1/20				
				1/20	13	14	1/20				
				1/20	15	16	1/20				
			SPACE		17	18		SPACE			
					19	20					
					21	22					
					23	24					
					25	26					
					27	28					
					29	30					
					31	32					
					33	34					
					35	36					
			TVSS EXTENSION	3/	37	38	3/	PANEL 1LC2	6800		
			—		39	40		—		7200	
			—	/60	41	42	/100	—			6000

PANELBOARD: 1LC2 | VOLTAGE: 208Y120V,3Ø,4W | BUS RATING: 100A | MAIN: MAIN LUGS ONLY | TOTAL CONNECTED VA: 20000
LOCATION: ELECT. RM. 149 | MFG. AND TYPE: SQ-D NQOD | EQUIP. GRD. BUS: YES | ISOL. GRD. BUS: NO | TOTAL A Ø : 6800 | TOTAL B Ø : 7200
MOUNTING: SURFACE | ENCLOSURE: NEMA 1 | MINIMUM A.I.C. RATING: 10,000 | FED FROM: PANEL 1LC1 | TOTAL C Ø : 6000

AØ	BØ	CØ	SERVES	P/T	CIR. NO.	CIR. NO.	P/T	SERVES	AØ	BØ	CØ
1200			REC'S 102	1/20	1	2	1/20	REC'S -107,105,103	1200		
	1200		✓	1/20	3	4	1/20	✓ 153,113,112		1200	
		1200	✓	1/20	5	6	1/20	✓ 106,142,36			1200
1200			REC'S 102/107	1/20	7	8	1/20	REC'S -157,121,115	1200		
	1200		REC'S 144	1/20	9	10	1/20	✓ 127,122,		1200	
		1200	DVR - 144	1/20	11	12	1/20	✓ 133,134,128			1200
1200			REC'S - 144	1/20	13	14	1/20	REC -151/PROJ.	800		
	1200		✓ - 144	1/20	15	16	1/20	- SOUND BOOTH 122		1200	
					17	18	1/20	- SOUND BOOTH 122			1200
					19	20	1/20	REC'S-WIRELESS REC.			
					21	22					
					23	24					
					25	26					
					27	28					
					29	30					
					31	32					
					33	34					
					35	36					
					37	38	3/	TVSS EXTENSION			
					39	40		—			
					41	42	/60	—			

PANELBOARD: 2LC1 | VOLTAGE: 208Y120V,3Ø,4W | BUS RATING: 100A | MAIN: 60A/3P MCB | TOTAL CONNECTED VA: 9600
LOCATION: ELECT. RM. 213A | MFG. AND TYPE: SQ-D NQOD | EQUIP. GRD. BUS: YES | ISOL. GRD. BUS: NO | TOTAL A Ø : 3600 | TOTAL B Ø : 3600
MOUNTING: SURFACE | ENCLOSURE: NEMA 1 | MINIMUM A.I.C. RATING: 10,000 | FED FROM: TRF. T2LC1 | TOTAL C Ø : 2400

AØ	BØ	CØ	SERVES	P/T	CIR. NO.	CIR. NO.	P/T	SERVES	AØ	BØ	CØ
1200			REC'S 211G/211F/211E	1/20	1	2	1/20	RECS 205/204	800		
	800		✓ 211D/211C	1/20	3	4	1/20	✓ 206/211A		1200	
		1200	✓ 211H/211J/210	1/20	5	6	1/20	✓ 203			1200
1000			REC'S 211	1/20	7	8	1/20	WIRELESS RECIEVER	600		
	1200		✓ 211 COPY MACHINE	1/20	9	10	1/20	REC-CONF. 203		400	
			SPARE	1/20	11	12	1/20	SPARE			
				1/20	13	14	1/20				
				1/20	15	16	1/20				
			SPACE		17	18		SPACE			
					19	20					
					21	22					
					23	24					
					25	26					
					27	28					
					29	30					
					31	32					
					33	34					
					35	36					
-			TVSS EXTENSION	3/	37	38					
	-		—		39	40					
		-	—	/60	41	42					

SECTION 1

PANELBOARD: 2LC2 | VOLTAGE: 208Y120V,3Ø,4W | BUS RATING: 225A | MAIN: 225A/3P MCB W/FEED THRU LUGS | TOTAL CONNECTED VA: 57500
LOCATION: ELECT. RM. 219 | MFG. AND TYPE: SQ-D NQOD | EQUIP. GRD. BUS: YES | ISOL. GRD. BUS: NO | TOTAL A Ø : 20400 (170) | TOTAL B Ø : 18800
MOUNTING: SURFACE | ENCLOSURE: NEMA 1 | MINIMUM A.I.C. RATING: 10,000 | FED FROM: TRF. T2LC2 | TOTAL C Ø : 18300

AØ	BØ	CØ	SERVES	P/T	CIR. NO.	CIR. NO.	P/T	SERVES	AØ	BØ	CØ
1200			REC'S - 222	1/20	1	2	1/20	RECS - 222	1200		
	1200		✓	1/20	3	4	1/20	✓		1200	
		1200	✓	1/20	5	6	1/20	✓			1200
1200			✓	1/20	7	8	1/20	✓	1200		
	1200		✓	1/20	9	10	1/20	✓		1200	
		1200	✓	1/20	11	12	1/20	✓			1200
1200			✓	1/20	13	14	1/20	✓	1200		
	1200		✓	1/20	15	16	1/20	✓		1200	
		1200	✓	1/20	17	18	1/20	✓			1200
1200			REC - 222 PODIUM	1/20	19	20	1/20	RECS - 216	800		
	1200		REC - 222 PROJECTOR	1/20	21	22	1/20	✓ ✓		800	
		1200	REC - 216	1/20	23	24	1/20	✓ ✓			1000
1200			REC - 214	1/20	25	26	1/20	✓ ✓	1000		
	1200		✓ ✓	1/20	27	28	1/20	✓ ✓		1000	
		1200	✓ ✓	1/20	29	30	1/20	✓ ✓			100
1200			REC - 214	1/20	31	32	1/20	✓ ✓	1000		
	1200		✓ ✓	1/20	33	34	1/20	✓ ✓		1000	
		1200	REC - 214	1/20	35	36	1/20	✓ ✓			1200
1200			✓ ✓	1/20	37	38	1/20	✓ ✓	800		
	1200		REC - 214	1/20	39	40	1/20	✓ ✓		800	
		1200	✓ ✓	1/20	41	42	1/20	✓ ✓			800

SECTION 2

PANELBOARD: 2LC2 | VOLTAGE: 208Y120V,3Ø,4W | BUS RATING: 225A | MAIN: MAIN LUGS ONLY | TOTAL CONNECTED VA: •
LOCATION: ELECT. RM. 219 | MFG. AND TYPE: SQ-D NQOD | EQUIP. GRD. BUS: YES | ISOL. GRD. BUS: NO | TOTAL A Ø : • | TOTAL B Ø : •
MOUNTING: SURFACE | ENCLOSURE: NEMA 1 | MINIMUM A.I.C. RATING: 10,000 | FED FROM: SECTION 1 | TOTAL C Ø : •

AØ	BØ	CØ	SERVES	P/T	CIR. NO.	CIR. NO.	P/T	SERVES	AØ	BØ	CØ
1200			REC'S - 214	1/20	43	44	1/20	RECS - 214	1200		
	1200		✓ ✓	1/20	45	46	1/20	✓ ✓		1200	
		1200	REC'S - 214	1/20	47	48	1/20	✓ ✓			1200
1200			✓ ✓	1/20	49	50	1/20	✓ ✓	1200		
	800		WIRELESS RECEIVER	1/20	51	52	1/20	RECS - 216			
		800	WIRELESS RECEIVER	1/20	53	54	1/20	✓ - 214			
			SPARE	1/20	55	56	1/20	SPARE			
				1/20	57	58	1/20				
				1/20	59	60	1/20				
				1/20	61	62	1/20				
			SPACE		63	64		SPACE			
					65	66					
					67	68					
					69	70					
					71	72					
					73	74					
					75	76					
					77	78					
					79	80	3/	TVSS EXTENSION			
					81	82		—			
					83	84	/60	—			

PANELBOARD: 3LC1 | VOLTAGE: 208Y120V,3Ø,4W | BUS RATING: 225A | MAIN: 225A/3P/MCB | TOTAL CONNECTED VA: 51800
LOCATION: ELECT. RM. 314 | MFG. AND TYPE: SQ-D NQOD | EQUIP. GRD. BUS: YES | ISOL. GRD. BUS: NO | TOTAL A Ø : 19400 | TOTAL B Ø : 17400
MOUNTING: SURFACE | ENCLOSURE: NEMA 1 | MINIMUM A.I.C. RATING: 10,000 | FED FROM: TRF. T3CL1 | TOTAL C Ø : 15000

AØ	BØ	CØ	SERVES	P/T	CIR. NO.	CIR. NO.	P/T	SERVES	AØ	BØ	CØ
1200			REC'S - 303	1/20	1	2	1/20	RECS - 303A	1000		
	800		✓ - 303 PROJ.	1/20	3	4	1/20	✓ - ✓ ✓		1000	
		1200	✓ - 303	1/20	5	6	1/20	RECS - OFF. 312/310/308			1200
1200			REC'S - 303 HEADWALL	1/20	7	8	1/20	RECS - 307 SEATING	1200		
	1200		✓ - 303 ✓	1/20	9	10	1/20	✓ ✓ ✓		1200	
		1000	✓ - 303 ✓	1/20	11	12	1/20	✓ ✓ ✓			1200
1200			REC'S - 307	1/20	13	14	1/20	RECS - 307 SEATING	1200		
	800		PROJ. 307	1/20	15	16	1/20	✓ ✓ ✓		1200	
			WIRELESS RECIEVERS	1/20	17	18	1/20	✓ ✓ ✓			1200
			SPARE	1/20	19	20	1/20	RECS - 307 SEATING	1200		
				1/20	21	22	1/20	✓ ✓ ✓		1200	
				1/20	23	24	1/20	✓ ✓ ✓			1200
				1/20	25	26	1/20	RECS - 307 SEATING	1200		
				1/20	27	28	1/20	✓ ✓ ✓		1200	
				1/20	29	30		SPACE			
			SPACE		31	32					
			SPACE		33	34					
			SPACE		35	36					
			TVSS EXTENSION	3/	37	38	3/	PANEL 3LC2	0000		
			—		39	40		—		8800	
			—	/60	41	42	/150	—			8000

PANELBOARD: 3LC2 | VOLTAGE: 208Y120V,3Ø,4W | BUS RATING: 225A | MAIN: 225A MLO | TOTAL CONNECTED VA: 26800
LOCATION: ELECT. RM. 323 | MFG. AND TYPE: SQ-D NQOD | EQUIP. GRD. BUS: YES | ISOL. GRD. BUS: NO | TOTAL A Ø : 10000 | TOTAL B Ø : 8800
MOUNTING: SURFACE | ENCLOSURE: NEMA 1 | MINIMUM A.I.C. RATING: 10,000 | FED FROM: PANEL 3CL1 | TOTAL C Ø : 8000

AØ	BØ	CØ	SERVES	P/T	CIR. NO.	CIR. NO.	P/T	SERVES	AØ	BØ	CØ
1200			REC'S - 331	1/20	1	2	1/20	RECS - 329/325	1200		
	1200		✓ ✓	1/20	3	4	1/20	✓ PROJ. 329		1000	
		1200	✓ ✓	1/20	5	6	1/20	✓ 329			800
1200			✓ ✓	1/20	7	8	1/20	REC'S - 325/329	1200		
	1200		REC'S - 331	1/20	9	10	1/20	✓ PROJ. 325		1000	
		1200	✓ ✓	1/20	11	12	1/20	✓ 325			800
1200			✓ ✓	1/20	13	14	1/20	REC'S - 324	1200		
	1200		✓ ✓	1/20	15	16	1/20	REC'S - ✓		1200	
		1000	PROJ. - 331	1/20	17	18	1/20	REC'S - 324			1200
800			REC'S - 331	1/20	19	20	1/20	✓ ✓	1200		
	1000		NURSE CALL CONTROL P.	1/20	21	22	1/20	REC'S - 324 PROJ.		1000	
		1000	T.V. MONITORS-pROJ.	1/20	23	24	1/20	✓ ✓			800
			SPARE	1/20	25	26	1/20	✓ 322/320	800		
				1/20	27	28		SPACE			
				1/20	29	30					
				1/20	31	32					
				1/20	33	34					
				1/20	35	36					
			TVSS EXTENSION	3/	37	38					
			—		39	40					
			—	/60	41	42					

PANELBOARD: 1MH1 | VOLTAGE: 480Y277V,3Ø,4W | BUS RATING: 400A | MAIN: MAIN LUGS ONLY | TOTAL CONNECTED VA: 155611
LOCATION: ELECT. RM. 182A | MFG. AND TYPE: SQ-D NF | EQUIP. GRD. BUS: YES | ISOL. GRD. BUS: NO | TOTAL A Ø : 54375 (196) | TOTAL B Ø : 51888
MOUNTING: SURFACE | ENCLOSURE: NEMA 1 | MINIMUM A.I.C. RATING: | FED FROM: MDP | TOTAL C Ø : 49348

AØ	BØ	CØ	SERVES	P/T	CIR. NO.	CIR. NO.	P/T	SERVES	AØ	BØ	CØ
5820			AHU-1 15HP	3/	1	2	1/15	HVAC FAN BOXES SOUTH	1385		
	5820		—		3	4	1/15	HVAC AIR TERMINAL SOUTH		1385	
		5820	—	/40	5	6	1/20	HVAC AIR TERMINAL			800
3050			PUMP P-1 7.5HP	3/	7	8	3/	WH-1 24KW	8000		
	3050		—		9	10		—		8000	
		3050	—	/20	11	12	/40	—			8000
			SPACE		13	14	3/	VACUUM PUMP 3HP	1330		
					15	16		—		1330	
					17	18	/15	—			1330
					19	20	3/	VACUUM PUMP 3HP	1330		
					21	22		—		1330	
					23	24	/15	—			1330
					25	26		SPACE			
					27	28					
					29	30					
					31	32	3/	PANEL 3MH1	15560		
					33	34		—		14360	
					35	36	/100	—			12405
					37	38	3/	PANEL 2MH1	17900		
					39	40		—		16613	
					41	42	/125	—			16613

DONALD W. REYNOLDS CENTER FOR HEALTH SCIENCES
ARKANSAS STATE UNIVERSITY
JONESBORO, ARKANSAS

BRACKETT KRENNERICH architects
100 East Huntington, Suite D P.O. Box 1655 Jonesboro, Arkansas 72403-1655
870-932-0571 Fax 870-932-0975 www.bkarchts.com

Commission Number 12406

E602

Date: JANUARY 25, 2008

2MH1

PANELBOARD: 2MH1 | VOLTAGE: 480Y277V,3Ø,4W | BUS RATING: 125A | MAIN: MAIN LUGS ONLY
LOCATION: ELECT. RM. | MFG. AND TYPE: SQ-D NF | EQUIP. GRD. BUS: YES | ISOL. GRD. BUS: NO
MOUNTING: SURFACE | ENCLOSURE: NEMA 1 | MINIMUM A.I.C. RATING: 18000 | FED FROM: 1MH1

TOTAL CONNECTED VA: 51124
TOTAL A Ø : 17898
TOTAL B Ø : 16613
TOTAL C Ø : 16613

LOAD (VA) AØ	BØ	CØ	SERVES	P/T	CIR. NO.	ABC ØØØ	CIR. NO.	P/T	SERVES	LOAD (VA) AØ	BØ	CØ
1662			HVAC FAN BOXES NORTH	1/15	1		2	1/15	HAVC FAN BOXES – SO	1108		
	1385		✓ ✓ ✓ ✓	1/15	3		4	1/15	HVAC FAN BOXES – S		1108	
		1385	✓ ✓ ✓ ✓	1/15	5		6	1/15	HVAC FAN BOX			1108
700			HVAC AIR TERMINAL	1/15	7		8	1/15	HVAC FAN BOXES	1108		
			SPARE	1/15	9		10	1/20	HVAC AIR TERMINALS		800	
				1/20	11		12	1/20	HVAC AIR TERMINALS			800
			SPARE		13		14		SPACE			
					15		16					
					17		18					
					19		20					
					21		22					
					23		24					
					25		26					
					27		28					
					29		30					
					31		32					
					33		34					
					35		36					
9420			AHU-3 (ON ROOF)	1	37		38	3	ER VENT SCHED. (ON ROOF)	3900		
	9420		✓		39		40		✓		3900	
		9420	✓	70	41		42	28	✓			3900

3MH1

PANELBOARD: 3MH1 | VOLTAGE: 480Y277V,30,4W | BUS RATING: 125A | MAIN: MAIN LUGS ONLY
LOCATION: ELECT. RM. 314 | MFG. AND TYPE: SQ-D NF | EQUIP. GRD. BUS: YES | ISOL. GRD. BUS: NO
MOUNTING: SURFACE | ENCLOSURE: NEMA 1 | MINIMUM A.I.C. RATING: 18000 | FED FROM: PANEL 1HM1

TOTAL CONNECTED VA: 33787
TOTAL A Ø : 15,560
TOTAL B Ø : 14,360
TOTAL C Ø : 12,405

LOAD (VA) AØ	BØ	CØ	SERVES	P/T	CIR. NO.	ABC ØØØ	CIR. NO.	P/T	SERVES	LOAD (VA) AØ	BØ	CØ
1940			HVAC FAN BOXES SO.	1/15	1		2	3	– AHU-3	9420		
	1602		✓ ✓ ✓	1/15	3		4				9420	
		1385	✓ ✓ ✓	1/15	5		6	70				9420
600			HVAC AIR TERMINALS	1/15	7		8		SPACE			
			SPARE	1/15	9		10					
				1/15	11		12					
				1/15	13		14					
				1/15	15		16					
					17		18					
					19		20	3	PANEL 3MH2	3600		
					21		22		✓		2400	
					23		24	60	✓			1600
					25		26					
					27		28					
					29		30					
					31		32					
					33		34					
					35		36					
					37		38					
					39		40					
					41		42					

3MH2

PANELBOARD: 3MH2 | VOLTAGE: 480Y277V,3Ø,4W | BUS RATING: 125A | MAIN: MAIN LUGS ONLY
LOCATION: ELECT. RM. 323 | MFG. AND TYPE: SQ-D NF | EQUIP. GRD. BUS: YES | ISOL. GRD. BUS: NO
MOUNTING: SURFACE | ENCLOSURE: NEMA 1 | MINIMUM A.I.C. RATING: 18000 | FED FROM: PANEL 3HM1

TOTAL CONNECTED VA: 7600
TOTAL A Ø : 3600
TOTAL B Ø : 2400
TOTAL C Ø : 1600

LOAD (VA) AØ	BØ	CØ	SERVES	P/T	CIR. NO.	ABC ØØØ	CIR. NO.	P/T	SERVES	LOAD (VA) AØ	BØ	CØ
2000			HVAC FAN BOXES	1/15	1		2		SPACE			
	800		HVAC AIR TERMINAL	1/15	3		4					
		1600	HVAC FAN BOXES	1/15	5		6					
1600			HVAC FAN BOXES	1/15	7		8					
	1600		HVAC FAN BOXES	1/15	9		10					
			SPARE	1/15	11		12					
				1/15	13		14					
				1/15	15		16					
				1/15	17		18					
					19		20					
					21		22					
					23		24					
					25		26					
					27		28					
					29		30					
					31		32					
					33		34					
					35		36					
					37		38					
					39		40					
					41		42					

EDP

PANELBOARD: EDP | VOLTAGE: 480Y277V,30,4W | BUS RATING: 400A | MAIN: MAIN LUGS ONLY
LOCATION: ELECT. RM. | MFG. AND TYPE: SQ-D NF | EQUIP. GRD. BUS: YES | ISOL. GRD. BUS: NO
MOUNTING: SURFACE | ENCLOSURE: NEMA 1 | MINIMUM A.I.C. RATING: 35000 | FED FROM: ATS

TOTAL CONNECTED VA: 181430
TOTAL A Ø : 67500 (243)
TOTAL B Ø : 57670
TOTAL C Ø : 56260

LOAD (VA) AØ	BØ	CØ	SERVES	P/T	CIR. NO.	ABC ØØØ	CIR. NO.	P/T	SERVES	LOAD (VA) AØ	BØ	CØ
16300			TRF. T1ELD	3	1		2	3	TRF. T2EL1	1800		
	11000		———		3		4		———		2000	
		12900	———	100	5		6	40	———			400
9370			PNL'S 1EH1,2EH1,3EH1	3	7		8	3	PANEL 3EHD	7980		
	5090		———		9		10		———		7980	
		3380	———	100	11		12	100	———			7980
			SPACE		13		14		SPACE			
					15		16					
					17		18					
					19		20					
					21		22					
					23		24					
					25		26					
					27		28					
					29		30					
15800			ELEV. #1	3	31		32					
	15800		———		33		34					
		15800	———	150	35		36					
15800			ELEV. #2	3	37		38					
	15800		———		39		40					
		15800	———	150	41		42					

1EH1

PANELBOARD: 1EH1 | VOLTAGE: 480Y277V,30,4W | BUS RATING: 125A | MAIN: 125 MLO W/FEED THRU LUGS
LOCATION: 1ST FLOOR ELEC 149 | MFG. AND TYPE: SQ-D NF | EQUIP. GRD. BUS: YES | ISOL. GRD. BUS: NO
MOUNTING: SURFACE | ENCLOSURE: NEMA 1 | MINIMUM A.I.C. RATING: 18,000 | FED FROM: EHD

TOTAL CONNECTED VA: 9320
TOTAL A Ø : 4050
TOTAL B Ø : 2590
TOTAL C Ø : 2680

LOAD (VA) AØ	BØ	CØ	SERVES	P/T	CIR. NO.	ABC ØØØ	CIR. NO.	P/T	SERVES	LOAD (VA) AØ	BØ	CØ
1540			LGTS TLT/CORR/STAIRS	1/20	1		2	1/20	LGTS. THERAPY TREATMNT EAST	2510		
	1400		LGTS-THERAPY/TREATMNT/REHAB	1/20	3		4	1/20	LGTS.-RESEARCH		1190	
		2680	LGTS-LOBBY AAL01/FFCOL	1/20	5		6	1/20	SPARE			
			SPARE	1/20	7		8		SPACE			
			✓	1/20	9		10					
			SPACE		11		12					
					13		14					
					15		16					
					17		18					
					19		20					
					21		22					
					23		24					
					25		26					
					27		28					
					29		30					
					31		32					
					33		34					
					35		36					
					37		38					
					39		40					
					41		42					

2EH1

PANELBOARD: 2EH1 | VOLTAGE: 480Y277V,3Ø,4W | BUS RATING: 125A | MAIN:
LOCATION: | MFG. AND TYPE: SQ-D NF | EQUIP. GRD. BUS: YES | ISOL. GRD. BUS: NO
MOUNTING: SURFACE | ENCLOSURE: NEMA 1 | MINIMUM A.I.C. RATING: 18,000 | FED FROM: EHP

TOTAL CONNECTED VA: *
TOTAL A Ø : 2100
TOTAL B Ø : 2100
TOTAL C Ø : *

LOAD (VA) AØ	BØ	CØ	SERVES	P/T	CIR. NO.	ABC ØØØ	CIR. NO.	P/T	SERVES	LOAD (VA) AØ	BØ	CØ
2100			LGTS. CORR. AAC02/TLTS/EXITS	1/20	1		2		SPARE			
	2100		LGTS-LOBBY C.R. 222/216/214		3		4					
			SPARE		5		6					
			SPACE		7		8		SPACE			
					9		10					
					11		12					
					13		14					
					15		16					
					17		18					
					19		20					
					21		22					
					23		24					
					25		26					
					27		28					
					29		30					
					31		32					
					33		34					
					35		36					
					37		38					
					39		40					
					41		42					

3EH1

PANELBOARD: 3EH1 | VOLTAGE: 480Y277V,30,4W | BUS RATING: 125A | MAIN: 125 MLO
LOCATION: | MFG. AND TYPE: SQ-D NF | EQUIP. GRD. BUS: YES | ISOL. GRD. BUS:
MOUNTING: SURFACE | ENCLOSURE: NEMA 1 | MINIMUM A.I.C. RATING: 18,000 | FED FROM: EHD

TOTAL CONNECTED VA: 4320
TOTAL A Ø : 3220
TOTAL B Ø : 400
TOTAL C Ø : 700

LOAD (VA) AØ	BØ	CØ	SERVES	P/T	CIR. NO.	ABC ØØØ	CIR. NO.	P/T	SERVES	LOAD (VA) AØ	BØ	CØ
2500			LGTS. CORR. TLTS/325/?	1/20	1		2	1/20	SPARE			
	400		LGTS. C.R. 331	1/20	3		4	1/20				
		700	LGTS. CORR. TLTS/325/?	1/20	5		6	1/20				
720			LGTS. CORR. TLTS/325/?	1/20	7		8	1/20				
			SPACE		9		10		SPACE			
					11		12					
					13		14					
					15		16					
					17		18					
					19		20					
					21		22					
					23		24					
					25		26					
					27		28					
					29		30					
					31		32					
					33		34					
					35		36					
					37		38					
					39		40					
					41		42					

3EHD

PANELBOARD: 3EHD | VOLTAGE: 480Y277V,30,4W | BUS RATING: 125A | MAIN: MLO
LOCATION: | MFG. AND TYPE: SQ-D NF | EQUIP. GRD. BUS: | ISOL. GRD. BUS: NO
MOUNTING: SURFACE | ENCLOSURE: NEMA 1 | MINIMUM A.I.C. RATING: 18,000 | FED FROM: EHD

TOTAL CONNECTED VA: 24940
TOTAL A Ø : 7980 (30)
TOTAL B Ø : 7980
TOTAL C Ø : 7980

LOAD (VA) AØ	BØ	CØ	SERVES	P/T	CIR. NO.	ABC ØØØ	CIR. NO.	P/T	SERVES	LOAD (VA) AØ	BØ	CØ
			SPACE	3	1		2	3	SPACE			
			———		3		4		———			
			———		5		6		———			
1330			SMOKE PURGE FAN 4	3	7		8	3	SMOKE PURGE FAN 7	1330		
	1330		———		9		10		———		1330	
		1330	———	15	11		12	15	———			1330
1330			SMOKE PURGE FAN 5	3	13		14	3	SMOKE PURGE FAN 8	1330		
	1330		———		15		16		———		1330	
		1330	———	15	17		18	15	———			1330
1330			SMOKE PURGE FAN 6	3	19		20	3	SMOKE PURGE FAN 9	1330		
	1330		———		21		22		———		1330	
		1330	———	15	23		24	15	———			1330
			SPARE	1/20	25		26	1/20	SPARE			
			SPARE	1/20	27		28	1/20	SPARE			
			SPACE		29		30		SPACE			
					31		32					
					33		34					
					35		36					
					37		38					
					39		40					
					41		42					

1ELD

PANELBOARD: 1ELD | VOLTAGE: 208Y120V,30,4W | BUS RATING: 225A | MAIN: 225A/3 MCB
LOCATION: ELECT. RM. 323 | MFG. AND TYPE: SQ-D NQOD | EQUIP. GRD. BUS: YES | ISOL. GRD. BUS: NO
MOUNTING: SURFACE | ENCLOSURE: NEMA 1 | MINIMUM A.I.C. RATING: 10,000 | FED FROM: PANEL 3CL1

TOTAL CONNECTED VA: 40200
TOTAL A Ø : 16300
TOTAL B Ø : 11000
TOTAL C Ø : 12900

LOAD (VA) AØ	BØ	CØ	SERVES	P/T	CIR. NO.	ABC ØØØ	CIR. NO.	P/T	SERVES	LOAD (VA) AØ	BØ	CØ
1200			ELEV. LGTS	1/20	1		2	1/20	REC'S –180,178,170	1200		
			SPARE		3		4	2/	GENSET WATER JACKET HTR.		1500	
		1200	ELEV. CONTROLS	1/20	5		6	/20	———			1500
			SPARE		7		8	1/20	GENSET BATTERY CHARGER	1200		
	1200		ELEV. LGTS	1/20	9		10	1/20	REC. – GENSET AREA		500	
			SPARE		11		12	1/20	REC. – HVAC CONTROLS STATION			500
1200			ELEV. CONTROLS	1/20	13		14	1/20	LGTS. – IT RM.	200		
			SPARE		15		16					
					17		18					
					19		20					
					21		22					
					23		24					
					25		26					
					27		28					
					29		30					
					31		32					
					33		34					
					35		36					
					37		38	3	PNL'S 1EL2,2EL2,3EL2	11300		
					39		40		SUBFEED CB		7800	
					41		42	150				9700

DONALD W. REYNOLDS CENTER FOR HEALTH SCIENCES

ARKANSAS STATE UNIVERSITY
JONESBORO, ARKANSAS

BRACKETT KRENNERICH architects
100 East Huntington, Suite D P.O. Box 1655 Jonesboro, Arkansas 72403-1655
870-932-0571 Fax 870-932-8975 www.bkarchs.com

Commission Number 12406
E603
Date: JANUARY 25, 2008

DONALD W. REYNOLDS CENTER FOR HEALTH SCIENCES

ARKANSAS STATE UNIVERSITY

JONESBORO, ARKANSAS

1EL2

PANELBOARD: 1EL2 | VOLTAGE: 208Y120V,30,4W | BUS RATING: 225A | MAIN: 225 MLO W/FEED THRU LUGS | TOTAL CONNECTED VA: 12400

LOCATION: | MFG. AND TYPE: SQ.D NQOD | EQUIP. GRD. BUS: YES | ISOL. GRD. BUS:

MOUNTING: SURFACE | ENCLOSURE: NEMA 1 | MINIMUM A.I.C. RATING: 10,000 | FED FROM: PANEL 1ELD

TOTAL A Ø : 5000 | TOTAL B Ø : 3600 | TOTAL C Ø : 3800

LOAD (VA) AØ	BØ	CØ	SERVES	P/T	CIR. NO.	ABC ØØØ	CIR. NO.	P/T	SERVES	LOAD (VA) AØ	BØ	CØ
			SPARE	1/20	1		2	1/20	UPS OUTLET-IT ROOM	2000		
	200		LGTS. - IT RM.	1/20	3		4	1/20	REC'S IT ROOM		1000	
		1200	REC-123 REFRIG.	1/20	5		6	1/20	REC'S IT ROOM			1000
600			SMOKE DAMPERS	1/20	7		8	1/20	AUTO-DOOR EXT.	1200		
	400		SMOKE DAMPERS	1/20	9		10	1/20	AUTO-DOOR VEST.		1200	
		400	SMOKE DAMPERS	1/20	11		12	1/20	REC - SUMP PUMP ELEV.			1200
			SPARE	1/20	13		14	1/20		1200		
				1/20	15		16	1/20	✓ - ELEV. PLZS/EQ		800	
				1/20	17		18	1/20	SPARE			
			TVSS EXTENSION	3	19		20	1/20				
			_____		21		22	1/20				
			_____	60	23		24	1/20				
					25		26					
					27		28					
					29		30					
					31		32					
					33		34					
					35		36					
					37		38					
					39		40					
					41		42					

2EL2

PANELBOARD: 2EL2 | VOLTAGE: 208Y120V,30,4W | BUS RATING: 225A | MAIN: 225 MLO W/FEED THRU LUGS | TOTAL CONNECTED VA: 9200

LOCATION: | MFG. AND TYPE: SQ.D NQOD | EQUIP. GRD. BUS: YES | ISOL. GRD. BUS:

MOUNTING: SURFACE | ENCLOSURE: NEMA 1 | MINIMUM A.I.C. RATING: 10,000 | FED FROM: PANEL 1ELD

TOTAL A Ø : 3600 | TOTAL B Ø : 2200 | TOTAL C Ø : 3400

LOAD (VA) AØ	BØ	CØ	SERVES	P/T	CIR. NO.	ABC ØØØ	CIR. NO.	P/T	SERVES	LOAD (VA) AØ	BØ	CØ
1000			DATA RACK RECEPTS	1/20	1		2	1/20	AUTO-DOOR OPERATORS	1000		
	1000		✓ ✓	1/20	3		4	1/20	✓ ✓ ✓		1000	
		2000	DATA RACK NEMA 5-30R	1/20	5		6	1/20	AUTO-DOOR OPERATORS			1000
			SPARE	1/20	7		8		✓ ✓ ✓ ✓	1000		
				1/20	9		10	1/20	LGTS. - IT RM.		200	
				1/20	11		12	1/20	SMOKE DAMPERS			400
				1/20	13		14	1/20	✓ ✓	600		
				1/20	15		16		SPACE			
				1/20	17		18					
			TVSS EXTENSION	3	19		20					
			_____		21		22					
			_____	60	23		24					
					25		26					
					27		28					
					29		30					
					31		32					
					33		34					
					35		36					
					37		38					
					39		40					
					41		42					

3EL2

PANELBOARD: 3EL2 | VOLTAGE: 208Y120V,30,4W | BUS RATING: 225A | MAIN: 225 MLO W/FEED THRU LUGS | TOTAL CONNECTED VA: 7200

LOCATION: | MFG. AND TYPE: SQ.D NQOD | EQUIP. GRD. BUS: YES | ISOL. GRD. BUS:

MOUNTING: SURFACE | ENCLOSURE: NEMA 1 | MINIMUM A.I.C. RATING: 10,000 | FED FROM: PANEL 1ELD

TOTAL A Ø : 2700 | TOTAL B Ø : 2000 | TOTAL C Ø : 2500

LOAD (VA) AØ	BØ	CØ	SERVES	P/T	CIR. NO.	ABC ØØØ	CIR. NO.	P/T	SERVES	LOAD (VA) AØ	BØ	CØ
1000			DATA RACK RECEPTS	1/20	1		2	1/20	ICEMAKER	1500		
	2000		DATA RACK NEMA 5-30R	1/20	3		4	1/20	SPARE			
		1000	DATA RACK RECEPTS	1/20	5		6	1/20	REFRIG.			1500
200			LGTS. - IT RM.	1/20	7		8	1/20	SPARE			
			SPARE	1/20	9		10		SPACE			
				1/20	11		12					
				1/20	13		14					
				1/20	15		16					
					17		18					
			TVSS EXTENSION	3	19		20					
			_____		21		22					
			_____	60	23		24					
					25		26					
					27		28					
					29		30					
					31		32					
					33		34					
					35		36					
					37		38					
					39		40					
					41		42					

2EL1

PANELBOARD: 2EL1 | VOLTAGE: 208Y120V,30,4W | BUS RATING: 100A | MAIN: 100A/3P MCB | TOTAL CONNECTED VA: 4200

LOCATION: ELECT. RM. 219 | MFG. AND TYPE: SQ.D NQOD | EQUIP. GRD. BUS: YES | ISOL. GRD. BUS:

MOUNTING: SURFACE | ENCLOSURE: NEMA 1 | MINIMUM A.I.C. RATING: 10,000 | FED FROM: TRF. T2EL1

TOTAL A Ø : 1800 | TOTAL B Ø : 2000 | TOTAL C Ø : 400

LOAD (VA) AØ	BØ	CØ	SERVES	P/T	CIR. NO.	ABC ØØØ	CIR. NO.	P/T	SERVES	LOAD (VA) AØ	BØ	CØ
1800			PANEL 3EL1	3	1		2	1/20	SPARE			
	2000		_____		3		4	1/20				
		400	_____	50	5		6	1/20				
			SPACE		7		8		SPACE			
					9		10					
					11		12					
					13		14					
					15		16					
					17		18					
					19		20					
					21		22					
					23		24					
					25		26					
					27		28					
					29		30					
					31		32					
					33		34					
					35		36					
					37		38					
					39		40					
					41		42					

3EL1

PANELBOARD: 3EL1 | VOLTAGE: 208Y120V,30,4W | BUS RATING: 100A | MAIN: MAIN LUGS ONLY | TOTAL CONNECTED VA: 4200

LOCATION: ELECT. RM. 314 | MFG. AND TYPE: SQ.D NQOD | EQUIP. GRD. BUS: YES | ISOL. GRD. BUS:

MOUNTING: SURFACE | ENCLOSURE: NEMA 1 | MINIMUM A.I.C. RATING: 10,000 | FED FROM: PANEL 2EL1

TOTAL A Ø : 1800 | TOTAL B Ø : 2000 | TOTAL C Ø : 400

LOAD (VA) AØ	BØ	CØ	SERVES	P/T	CIR. NO.	ABC ØØØ	CIR. NO.	P/T	SERVES	LOAD (VA) AØ	BØ	CØ
1000			SMOKE PURGE PANEL	1/20	1		2	1/20	EF-4,5 LOUVER	400		
	1000		✓ ✓ ✓	1/20	3		4	1/20	EF-6,7		400	
			SPARE	1/20	5		6	1/20	EF-8,9			400
				1/20	7		8	1/20	SMOKE DAMPERS E	400		
				1/20	9		10	1/20	SMOKE DAMPERS W		600	
				1/20	11		12		SPACE			
				1/20	13		14					
				1/20	15		16					
			SPACE		17		18					
					19		20					
					21		22					
					23		24					
					25		26					
					27		28					
					29		30					
					31		32					
					33		34					
					35		36					
					37		38					
					39		40					
					41		42					

BRACKETT KRENNERICH architects

100 East Huntington, Suite D P.O. Box 1655 Jonesboro, Arkansas 72403-1655

870-932-0571 Fax: 870-932-0975 www.bkarchts.com

Commission Number 12406

E604

Date: JANUARY 25, 2008

GENERAL NOTES

1. CIRCUITS OF DIFFERENT PHASES MAY SHARE EQUIPMENT GROUND. EQUIPMENT GROUND CONDUCTOR SIZE SHALL NOT BE LESS THAN #12 AWG OR AS INDICATED ON THE DRAWINGS.
2. ALL CONDUCTORS #10 AND SMALLER SHALL BE SOLID COPPER THW THHN THWN, AND ALL CONDUCTORS #8 AND LARGER SHALL BE STRANDED COPPER USING BOLTED LUGS AT TERMINALS.
3. MINIMUM CONDUIT SIZE SHALL BE 3/4" UNLESS OTHERWISE NOTED. CONDUIT IN DRY LOCATIONS SHALL BE EMT. ALL CONDUIT SHALL BE CONCEALED UNLESS OTHERWISE NOTED.
4. MINIMUM WIRE SIZE SHALL BE #12 AWG UNLESS OTHERWISE NOTED.
5. ALL WORK SHALL COMPLY WITH THE 2005 EDITION OF THE NATIONAL ELECTRIC CODE.
6. ALL ELECTRICAL EQUIPMENT (CONDUIT, BOXES, SUPPORTS, ETC.) INSTALLED IN EXPOSED CEILING AREAS SHALL BE PAINTED AS DIRECTED BY THE ARCHITECT.
7. ELECTRICAL CONTRACTOR SHALL CLOSELY COORDINATE WITH MECHANICAL & PLUMBING CONTRACTORS FOR EXACT LOCATION OF HVAC & PLUMBING EQUIPMENT.
8. ELECTRICAL CONTRACTOR SHALL BE RESPONSIBLE FOR PROPER SIZING OF ALL MOTOR OVERLOAD DEVICES (HEATERS) IN STARTERS BASED ON ACTUAL NAMEPLATE RATINGS ON THE MOTORS BEING INSTALLED.
9. USE COMPRESSION FITTINGS ON CONDUIT, SET SCREW FITTINGS ARE NOT ALLOWED.
10. LABEL ALL NEW CIRCUITS ON PANEL SCHEDULES.
11. 6' MAX. LENGTH ON FLEX CONDUIT.
12. FIRE PROOF ALL PENETRATIONS MADE IN THROUGH FIRE RATED WALLS.
13. ALL DEVICES SHALL BE RATED 20AMP MIN., VERIFY COLOR WITH ARCHITECT.
14. CONNECT DEVICES BY WRAPPING WIRE AROUND SCREW TERMINAL IN A CLOCKWISE DIRECTION AND TIGHTEN SCREW, BACK-CONNECTED SPRING DEVICES ARE NOT ALLOWED
15. PULL ALL THE CONDUCTORS THROUGH RACEWAY AT THE SAME TIME.
16. ALL BOXES SHALL BE INDEPENDENTLY SUPPORTED TO BUILDING STRUCTURE.
17. CONTRACTOR SHALL REFER TO THE ARCHITECTURAL ELEVATIONS AND MILLWORK DETAILS FOR EXACT LOCATIONS OF ALL WIRING DEVICES.
18. THE SPECIFICATIONS ARE AS BINDING ON THE CONTRACTOR AS THE DRAWINGS. THE CONTRACTOR SHALL READ THE SPECIFICATIONS AND SHALL INCLUDE ALL ITEMS REQUIRED BY THE SPECIFICATIONS BEFORE SUBMITTING A BID.

GENERAL LIGHTING NOTES

1. MINIMUM WIRE SIZE SHALL BE #12 AWG UNLESS OTHERWISE NOTED. MINIMUM CONDUIT SIZE SHALL BE 3/4" UNLESS OTHERWISE NOTED. MINIMUM CONDUIT SIZE FOR SWITCH-LEGS TO BE 1/2". ALL CONDUIT IN OR BELOW FLOOR SLABS SHALL BE 1" MINIMUM UNLESS OTHERWISE NOTED.
2. NON-SWITCHED CIRCUIT CONDUCTORS SHALL BE RUN TO ALL LIGHT FIXTURES EQUIPPED WITH SELF-CONTAINED EMERGENCY BATTERY PACKS - LAMPS SHALL BE SWITCHED, BATTERY PACKS SHALL BE NON-SWITCHED. NON-SWITCHED CIRCUIT CONDUCTORS SHALL BE RUN TO ALL EXIT LIGHT FIXTURES - EXIT LIGHTS SHALL BE NON-SWITCHED.
3. FIELD ADJUST EXACT LOCATION OF LIGHT FIXTURES SHOWN CHAIN HUNG IN MECHANICAL, ELECTRICAL & OTHER AREAS AS REQUIRED TO AVOID CONFLICTS WITH ACTUAL EQUIPMENT, DUCTWORK, & PIPING LAYOUTS. DO NOT ATTACH CHAIN OR MOUNT FIXTURES TO DUCTWORK OR PIPING - SECURE FROM STRUCTURE ABOVE.
4. FIELD VERIFY EXACT LOCATIONS & ELEVATIONS OF ALL EXISTING WALL MOUNTED EQUIPMENT & DEVICES.
5. WHERE NEW WIRING DEVICES ARE SHOWN TO BE RECESS MOUNTED IN EXISTING WALLS, MOUNT BOXES WITH APPLETON #892 "LOX BOX" SUPPORTS IN MASONRY & DRYWALL APPLICATIONS. USE CADDY "DSB" BOX SUPPORTS FOR LATH & PLASTER APPLICATIONS. FEED NEW WIRING DEVICES WITH TYPE "MC" CABLE. MINIMUM SIZE SHALL BE 1/2 INCH. MINIMUM CONDUCTOR SIZE SHALL BE #12 AWG. ROUTE TYPE "MC" CABLE IN EXISTING WALL FROM RECESSED DEVICE TO A JUNCTION BOX ABOVE CEILING. ONCE ABOVE CEILING, ALL CIRCUITS SHALL BE IN EMT CONDUIT.

SYMBOLS SCHEDULE

SYMBOL	DESCRIPTION
	FLUORESCENT LIGHT FIXTURE - CEILING MOUNTED
	FLUORESCENT STRIP LIGHT - CEILING MOUNTED OR CHAIN HUNG
	FLUORESCENT STRIP LIGHT - EQUIPPED WITH 2-LAMP SELF-CONTAINED EMERGENCY BATTERY PACK
	FLUORESCENT STRIP LIGHT - WALL MOUNTED
	FLUORESCENT LIGHT FIXTURE - WALL MOUNTED
	INCANDESCENT, FLUORESCENT, OR HID DOWNLIGHT FIXTURE - CEILING MOUNTED
	INCANDESCENT, FLUORESCENT, OR HID LIGHT FIXTURE - WALL MOUNTED
	LIGHTING OUTLET - FLUSH MOUNTED WITH BLANK COVERPLATE
	EXIT LIGHTS - WALL MT. & CEILING MT. SHOWN - SHADING INDICATES FACE(S), DIRECTIONAL ARROWS SHALL BE AS SHOWN ON PLANS
S	SINGLE-POLE TOGGLE SWITCH
S_2	TWO-POLE TOGGLE SWITCH
S_3	THREE-WAY TOGGLE SWITCH
S_4	FOUR-WAY TOGGLE SWITCH
S_D	DIMMER CONTROL SWITCH EQUAL TO XXXXXXX
S_M	MANUAL MOTOR STARTER WITH OVERLOADS, TOGGLE OPERATED
S_K	SINGLE-POLE TOGGLE SWITCH - KEY OPERATED
S_{IC}	SINGLE-POLE TOGGLE SWITCH - INTERCHANGEABLE LINE (DESPARD)
S^{IC}_3	THREE-WAY TOGGLE SWITCH - INTERCHANGEABLE LINE (DESPARD)
S_{DT}	DIGITAL TIMER SWITCH, ADJUSTABLE ON DELAY.
$S_{a,b}$	MULTI-LEVEL SWITCHING: Sa - SWITCHES 2 OUTTER LAMPS Sb - SWITCHES INNER LAMP(S)
S_E	RED TOGGLE - COVERPLATE PER SPECIFICATIONS
OS	OCCUPANCY SENSOR FOR LIGHTING SEE SCHEDULE
	EMERG. LIGHTING INTERFACE UNIT(WATTSTOPPER ELU OR EQ) PROVIDE AND INSTALL MATCHING REMOTE TEST SWITCH PER DETAIL DRAWINGS
	DUPLEX RECEPTACLE
	QUADRAPLEX RECEPTACLE
AC	DUPLEX RECEPTACLE MOUNTED ABOVE COUNTER TOP - VERIFY MOUNTING HEIGHT WITH ARCHITECTURAL DRAWINGS
WP GFI	DUPLEX RECEPTACLE - GROUND FAULT INTERRUPTING & WEATHERPROOF TYPES INDICATED
TL SP	DUPLEX RECEPTACLE - SURGE PROTECTION, & TWIST-LOCK TYPES INDICATED
S	DUPLEX RECEPTACLE - CHILD SAFETY TYPE
C F	DUPLEX RECEPTACLE IN FLUSH MT'D IN FLOOR (F) OR CEILING (C) BOX
	PUSHBUTTON STATION
	SPECIAL PURPOSE OUTLET - NEMA CONFIGURATION (VOLTAGE, AMPACITY) AS NOTED ON DRAWINGS
J	JUNCTION BOX
A/V	6" X 6" X 4" DP. WALL BOX WITH CAST ALUMINUM PLATE POLISHED ONE SIDE. W/CUTOUTS/DEVICES MTD PER OWNER'S REQUIREMENTS. STUB-UP A 1-1/2"C AND A 3/4"C TO ABOVE CEILING.

SYMBOLS SCHEDULE

SYMBOL	DESCRIPTION
J D	JUNCTION BOX FOR DATA, SEE PLANS, D DENOTES FOR ALTERNATE DATA. #D DENOTES NO. OF CABLES/OUTLETS (I.E. "7D" DENOTES 7 CABLES/OUTLETS)
W	TELEPHONE OUTLET - WALL MOUNTED @ 48" A.F.F. U.O.N.
	TELEPHONE OUTLET - DEDICATED FAX LINE
	COMPUTER OUTLET (CAT 6 W/ VOICE OVER IP)
	CATV TELEVISION OUTLET
	COMPUTER OUTLET - FLUSH MOUNTED IN FLOOR SLAB
H	BRANCH CIRCUIT IN CONDUIT - SWITCHLEG THRU LIGHTING CONTROL SYSTEM, SWITCH LEG, PHASE LEG, NEUTRAL, EQUIPMENT GROUND.
H	BRANCH CIRCUIT HOMERUN - PANEL AND CIRCUIT NUMBER INDICATED
	CONDUIT CONCEALED IN OR BELOW FLOOR SLAB OR BELOW GRADE
E	EMERGENCY CIRCUIT(S) (SHOWN WITH NON-ARCHED LINES)
DC	BRANCH CIRCUIT DC POWER - TO EMERGENCY EGRESS LIGHTING
EPO OR EPO	EMERGENCY POWER OFF STATION (REMOTE SHUNT TRIP) - REFER TO "POWER RISER DIAGRAM"
	DISCONNECT SWITCH
	COMBINATION MOTOR STARTER / DISCONNECT SWITCH
	MOTOR STARTER
T	TRANSFORMER
C	CONTACTOR
TC	TIME CLOCK
RB	REMOTE MOUNTED BALLAST
	SURFACE MOUNTED PANELBOARD
	FLUSH MOUNTED PANELBOARD
	TELEPHONE TERMINAL BOARD
TCP	TEMPERATURE CONTROL PANEL (BY OTHERS)
T	THERMOSTAT
F 75	FIRE ALARM AUDIO/VISUAL DEVICE - NUMBER INDICATES INDICATES MINIMUM CANDELA RATING OF STROBE
F 75	FIRE ALARM STROBE ONLY - NUMBER INDICATES MINIMUM CANDELA RATING OF STROBE
F	FIRE ALARM PULL STATION
H	HEAT DETECTOR
SD	SMOKE DETECTOR
SD D	DUCT MOUNTED SMOKE DETECTOR
ZAM C	ZONE ADDRESSABLE MODULE - CONTROL TYPE
ZAM M	ZONE ADDRESSABLE MODULE - MONITOR TYPE
ZAM S	ZONE ADDRESSABLE MODULE - SIGNAL TYPE
IAM	INDIVIDUAL ADDRESSABLE MODULE
RT	DUCT MT'D SMOKE DETECTOR REMOTE TEST STATION
FS	FLOW SWITCH (FURNISHED BY DIVISION 15)
TS	TAMPER SWITCH (FURNISHED BY DIVISION 15)
DH	DOOR HOLDER (FURNISHED BY DIVISION 8)
FSCS	FIREMANS SMOKE CONTROL STATION
FANN	FIRE ALARM ANNUNUNCIATOR
R PU	PROJECTED BEAM SMOKE DETECTOR (RECIEVE UNIT)
S PU	PROJECTED BEAM SMOKE DETECTOR (SEND UNIT)
S	SPEAKER
WR C	DATA SYSTEM WIRELESS RECEIVER IN CEILING WITH DUPLEX RECEPT. ABOVE CEILING.

SYMBOLS SCHEDULE

SYMBOL	DESCRIPTION
NC	PATIENT NURSE CALL STATION
NC M	NURSE CALL STATION SUFFIX INDICATES M=MASTER STATION
S	DUPLEX RECEPTACLE - CHILD SAFETY TYPE
AC	DUPLEX RECEPTACLE - HOSPITAL GRADE - MOUNTED ABOVE COUNTER TOP - VERIFY MOUNTING HEIGHT WITH ARCHITECTURAL DRAWINGS
CR	CARD READER
ES	ELEC. STRIKE DOOR LOCK
NTS	PUSH TO EXIT BUTTON (TO RELEASE ELECTRIC STRIKE)
	CCTV CAMERA LOCATION ("PTZ" - DENOTES PAN-TILT-ZOOM) ("SS" DENOTES SECURITY SYSTEM CAMERA)
NS	NON-SWITCHED
CKT or CIR	DENOTES CIRCUIT
PE	DENOTES PHOTO CELL
UC	DENOTES UNDER COUNTER - VERIFY LOCATION
A/V	REFERS TO AUDIO/VIDEO SYSTEMS
AC	ABOVE COUNTER
AFF	ABOVE FINISH FLOOR
AFG	ABOVE FINISH GRADE
CKT	CIRCUIT
EP	EXPLOSION PROOF
EPO	EMERGENCY POWER OFF
GFI	GROUND FAULT INTERRUPTING
GRD	GROUND
MTD	MOUNTED
OHE	OVERHEAD ELECTRIC
PNL	PANELBOARD
SDBC	SOFT-DRAWN BARE COPPER
SP	SURGE PROTECTION
TC	TIME CLOCK
UGE	UNDERGROUND ELECTRIC
UON	UNLESS OTHERWISE NOTED
VFD	VARIABLE FREQUENCY DRIVE
WP	WEATHERPROOF
FD/FS	DIVISION 15 COMBINATION FIRE DAMPER/SMOKE DAMPER. PROVIDE AND INSTALL DUCT SMOKE DETECTOR AT EACH.

NOTE:

1. NOT ALL SYMBOLS MAY APPLY TO THIS PROJECT.
2. SYMBOLS SHOWN DASHED ON PLANS INDICATES EXISTING DEVICES, FIXTURES, EQUIPMENT, ETC.

FIXTURE SCHEDULE

TYPE	MANUFACTURER OR EQUAL	LAMPS	REMARKS	VOLTS
A	WILLIAMS #50G-S24-432-A12125-EB2/2 PROG. START-UNV	3-F32T8/835	2' X 4' , 4 LAMP RECESSED, ACRYLIC LENS	277V
B	WILLIAMS #50G-S24-332-A12125-EB2/2 PROG. START-UNV	3-F32T8/835	2' X 4' , 3 LAMP RECESSED, ACRYLIC LENS	277V
C	INFINITY PV60-132T-EB-BH-EB PROG. START	1-F32PLT/835	COMPACT FLOURESCENT DOWNLIGHT	277V
C1.	INFINITY PV60-132T-EB-BH-EB PROG. START-SHOWER	1-F32PLT/835	COMPACT FLOURESCENT DOWNLIGHT-SHOWER LIGHT	277V
C2.	INFINITY PV60-132T-EB-BH-EB PROG. START-DIM	1-F32PLT/835	COMPACT FLOURESCENT DOWNLIGHT-DIMMED	277V
C3.	INFINITY PV60-142T-EB-BH-EB PROG. START	1-F42PLT/835	COMPACT FLOURESCENT DOWNLIGHT	277V
C4.	INFINITY PV60-142T-EB-BH-EB PROG. START-DIM	1-F42PLT/835	COMPACT FLOURESCENT DOWNLIGHT-DIMMED	277V
CX	LIGHTOLIER 1102P1/1152 TRIM WITH BLUE 7555 FILTER AND AMBER 7556 FILTER	1-75WMR16 NARROW SPOT	RECESSED CAN/ADJUSTABLE PINHOLE TRIM, WITH FILTERS (INSTALL FILTERS AS DIRECTED)	277V
D	WILLIAMS 76-4-132-WG11-EBLH2-PROG. START	1-F32T8/835	1 LAMP STRIP W/WIREGUARD	277V
D1	WILLIAMS 76-4-232-WG11-EBLH2-PROG. START	2-F32T8/835	2 LAMP STRIP W/WIREGUARD	277V
D2	WILLIAMS 76-4-232-EBLH2-PROG. START	2-F32T8/835	2 LAMP STRIP	277V
E	WILLIAMS 29-4-232-A-EBLH1-PROG. START	2-F32T8/835	WALL MOUNTED FLOURESCENT- 4'	277V
E	WILLIAMS 29-4-217-A-EBLH1-PROG. START	2-F17T8/835	WALL MOUNTED FLOURESCENT- 2'	277V
E2	WILLIAMS 92-4-232-A-EBLH2-PROG. START	2-F32T8/835	SURFACE WRAPAROUND, VAPOR TIGHT	277V
F	D.M. LIGHTING 4453-WA-MAG-277-DIMMED	1-F32PLT/835	DIMMED FLOURESCENT WALL SCONCE	277V
F1	SPI-PIW1030-2F26-277-XXX-TL	2-26WPLT/835	FLOURESCENT WALL SCONCE-DECO	277V
F2	D.M. LIGHTING 6487-XX-XX	1-F26PLT/835	FLOURESCENT WALL SCONCE-DECO	277V
F3	INFINITY CPHL18Q-POLY-277-COLOR BY ARCH.	1-F18PLT/835	FLOURESCENT STEPLIGHT-277 MOUNTED 18" ABOVE STEP	277V
G1	WILLIAMS DIAG.-S14-232-WP-EBLH2-P.S.-277	1-F32PLT/835	FLOURESCENT WALLWASHER FOR WHITEBOARD, RECESSED	277V
G2	WILLIAMS 29-4-232-A-EBLH2 P.S.-	2-F32T8/835	WALL MOUNTED FLUORESCENT UP/DOWN LAMP	277V
H	WILLIAMS A13-P33-4-332-F-J-EB2/1 P.S.-ECS-277	2-F32T8/835	CONTINUJOUS ROW INDIRECT FLUORESCENT W/ 18" AIRCRAFT CABLE HGR - SEE PLANS FOR ROW LENGTH	277V
H1	SAME AS H ABOVE	3-F3T8/835	SAME AS H ABOVE	277V
I	WILLIAMS 2WO-48-132-EBLH1 P.S.-277	1-F32T8/835	UNDERCOUNTER LIGHT	277V
J	NOT USED			
K	SPI - RPI-1860-2F27/1F22-277-XXX-OAH27"	2-F27W/2011/835 PER BOWL	PENDANT CHANDELIER 27" OVERALL HGT.	277V
L	OMITTED			
M	OMITTED			
N	OMITTED			
O	OMITTED			
P	OMITTED			
Q	WILLIAMS DIG - S22-240TT-WPR-EB2 P.S.-277	2-F39T5/835	RECESSED 2x2 DIRECT INDIRECT	277V
Q1	WILLIAMS DIG - S24-232-WPR-EB2 P.S.-277	2-F32T8/835	RECESSED 2x4 INDIRECT	277V
Q2	OMITTED			
Q3	WILLIAMS DIG - S24-332-WPR-EB2/1 P.S.-277	2-F32T8/835	RECESSED 2x4 DIRECT-INDIRECT SWITCHED BALLASTS	277V
R	OMITTED			
R1	WILLIAMS 50G-S24-232-GA12125-EB2 P.S.-277	2-F32T8/835	RECESSED 2 LAMP 2x4	277V
S	ACCULITE VW-200-G-WH	1-200WA21	SURF WALL	120V
T	OMITTED			
U	SKYTRON HA60AR-WC ARGOS SERIES	INCLUDED W/ FIXTURES	MOTORIZED TWIN MEDICAL LIGHTS, REMOTE CONTROLLED, WITH WAND	120V
W	ALFA G30PK PENDANT CORD WITH FLEX. TRACK AND TRANSFORMERS AS SHOWN	50WMR16	HAND BLOWN LANTERNS, COLOR SELECTED BY ARCH	277V
Y	WINDIRECT P2-SSW-MH150-277-SS3-XXX	1-150WMH-3000K	OUTDOOR WALL MTD INDIRECT	277V
Y1	WINONA 5303-WL-R-2-XXX-XX-COLOR BY ARCH	1-100WMH-3000K	WALL SCONCE EXTERIOR	277V
Y2	ACCULITE DS-100PS-277-FT-X	1-100WMH-3000K	WALL SCONCE EXTERIOR	277V
Y3	ACCULITE DS-42CF-277V L-X	1-42WPLT/835	WALL SCONCE EXTERIOR	277V
Y4	WINDIRECT P3-LS-M-400-277-LS4-CPF-	1-400WMH 3000K	INDOOR WALL MTD INDIRECT	277V
Z	LITHONIA TPA-400M-R5A-TB-LPI ON 18' SATIN ALUM. POLE HAPCO 78007 - FURNISHED BY OWNER, INSTALLED BY CONTRACTOR	1-400WMH	PARKING LOT LIGHT, FURNISHED BY OWNER INSTALLED BY CONTRACTOR	277V

NOTES:

1) ALL FIXTURES SHALL BE PAINTED AFTER FABRICATION.
2) VERIFY ALL FIXTURE COLORS - THE COLOR AND FINISHES ARE TO BE SELECTED BY THE ARCHITECT AT NO ADDITIONAL COSTS, THE CONTRACTOR SHALL INCLUDE COST OF ARCHITECT COLOR SELECTION OF LIGHT FIXTURE IN BID.
3) COORDINATE ALL FIXTURES MOUNTING TYPE & HEIGHT WITH ARCHITECTURAL REFLECTED CEILING PLAN.

OCCUPANCY / DIMMING SENSOR LEGEND

OS_1	OCCUPANCY SENSOR EQUAL TO WATTSTOPPER #WS-200 WALL SWITCH - COLOR BY ARCHITECT
OS_2	OCCUPANCY SENSOR EQUAL TO WATTSTOPPER #DT-200 (WALL MOUNTED at 9'-0").
OS_2	OCCUPANCY SENSOR EQUAL TO WATTSTOPPER #DT-300 CEILING MOUNTED
OS_4	OCCUPANCY SENSOR EQUAL TO WATTSTOPPER #CI-200 CEILING MOUNTED PIR
OS_5	OCCUPANCY SENSOR EQUAL TO WATTSTOPPER #WT-2255 CEILING MOUNTED
OS_6	OCCUPANCY SENSOR EQUAL TO WATTSTOPPER #WP-2255 CEILING MOUNTED
OS_{6A}	OCCUPANCY SENSOR EQUAL TO WATTSTOPPER #WP-2205 CEILING MOUNTED
OS_{6B}	OCCUPANCY SENSOR EQUAL TO WATTSTOPPER #WP-600 WALL MOUNTED - IN STAIRWELLS ONLY
OL	OPEN LOOP DAYLIGHTING CONTROLLER EQUAL TO WATTSTOPPER #LCD 203/BT-203/LS-E8
PP	POWERPACK EQUAL TO WATTSTOPPER #BZ-100
PC	PHOTOCELL (OPEN LOOP) WATTSTOPPER #LS-290C
PP_1	SLAVE POWER PACK WATTSTOPPER #S120/277EP
PP_2	2-POLE (2 CIRCUITS) POWER PACK WATTSTOPPER #C120EP

DONALD W. REYNOLDS CENTER FOR HEALTH SCIENCES

ARKANSAS STATE UNIVERSITY

JONESBORO, ARKANSAS

BRACKETT KRENNERICH architects

100 East Huntington, Suite D P.O. Box 1655 Jonesboro, Arkansas 72403-1655 870-932-0571 Fax: 870-932-0975 www.bkarchs.com

Commission Number 12406

E701

Date: JANUARY 25, 2008