CHARLES F. LUTER FAMILY ACADEMIC SUCCESS CENTER

ADDITIONS TO ATHLETIC COMPLEX SOUTH ENTRY

ARKANSAS STATE UNIVERSITY JONESBORO, ARKANSAS

AS BUILTS 4/25/11
BAILEY CONTRACTORS

SYMBOLS

SECTION — A / A500 — SECTION NUMBER / SHEET NUMBER

DETAIL — 1 / A001 — DETAIL NUMBER / SHEET NUMBER

DOOR — 1

ALUMINUM FRAME — AF-1

HOLLOW METAL FRAME — HM-1

EXISTING CONTOUR LINE

NEW CONTOUR LINE

NEW SPOT ELEVATION — 259.67

FINISH ELEVATION — ELEV. = 100.00

ABBREVIATIONS

ABOVE FINISH FLOOR	A.F.F.	MECHANICAL	MECH.
ACOUSTICAL	ACOUST.	METAL THRESHOLD	M.T.
ALUMINUM	ALUM.	NOMINAL	NOM.
APPROXIMATE	APPROX.	NOT IN CONTRACT	N.I.C.
BOTTOM OF FOOTING	B.O.F.	ON CENTER	O.C.
CEILING	CLG.	PLATE	PL
CENTER LINE	℄	REQUIRED	REQ.
EACH	EA.	SIMILAR	SIM.
ELECTRIC WATER COOLER	E.W.C.	SQUARE	SQ.
FINISH	FIN.	SUSPENDED	SUSP.
FIRE EXTINGUISHER	F.E.	TOP OF CURB	T.O.C.
FIRE EXTINGUISHER CABINET	F.E.C.	TOP OF FOOTING	T.O.F.
FLOOR	FLR.	TOP OF WALL/WALK	T.O.W.
GENERAL CONTRACTOR	G.C.	TYPICAL	TYP.
INSULATION	INSUL.	WITH	W/
JOINT	JNT.		

MATERIALS

CONCRETE
STEEL
METAL STUDS
CONCRETE BLOCK
PLYWOOD
FINISH WOOD
WOOD FRAMING OR BLOCKING
GYPSUM BOARD
RIGID INSULATION
BATT INSULATION
COMPACT FILL
GRAVEL FILL
ASPHALT PAVING

ARKANSAS FIRE PREVENTION CODE DATA

INTERNATIONAL BUILDING CODE 2006

OCCUPANCY CLASSIFICATION — Group B, Business

BUILDING AREA (GROSS)
- Existing Lower Level — 14,088 sq. ft.
- Existing Upper Level — 5,121 sq. ft.
- New Upper Level — 325 sq. ft.
- Total — 19,534 sq. ft.

BUILDING HEIGHT — 13'-10"

NUMBER OF STORIES — Two (2)

TYPE OF CONSTRUCTION — Type III-B,Unsprinklered

ALLOWABLE HEIGHT(Table 503) — 55'-0"

ALLOWABLE AREA(Table 503) — 19,000 sq.ft. (Without Area Modifications)

MAXIMUM NO. OF STORIES — Four (4)

BUILDING SETBACKS
- North — Exceeds 30'-0" To Nearest Structure
- East — Exceeds 30'-0" To Nearest Structure
- South — Exceeds 30'-0" To Nearest Structure
- West — Exceeds 30'-0" To Nearest Structure

OCCUPANCY LOAD (Table 1003.2.2.2)
- Lower Level — 242
- Upper Level — 55
- Total — 297

EXIT ACCESS STRATEGY
- 4 Exits At Lower Level
- 3 Exits At Upper Level

EXIT REQUIREMENTS
- Min. No. of Exits — 2 Per Level
- Min. Door Size — 36" (ADA)
- Max. Distance to Exit — 200'-0"
- Egress Level — .2" Per Person

SEISMIC ZONE — 3, CATEGORY D

I hereby certify that these plans and specifications have been prepared by me, or under my supervision. I further certify that to the best of my knowledge these plans and specifications are as required by law and in compliance with the Arkansas Fire Prevention Code for the State of Arkansas.

George J. Krennerich III

BRACKETT-KRENNERICH & ASSOCIATES, P.A. — REGISTERED ARCHITECTS 213 — ARKANSAS — 18 JUNE 2010

VICINITY MAP

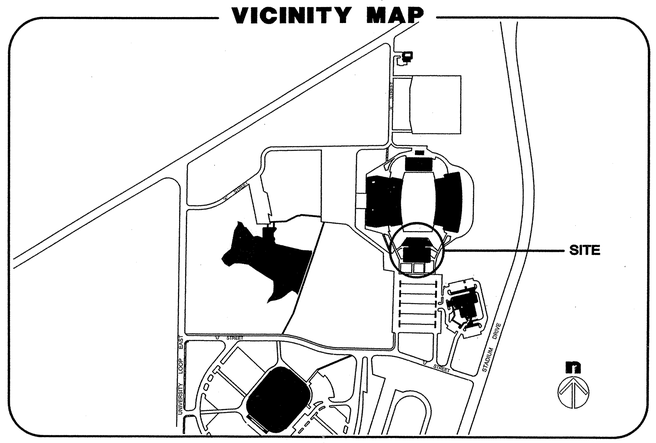

INDEX TO DRAWINGS

TITLE SHEET

CIVIL

C001 — PARTIAL SITE PLAN, SITE DETAILS

ARCHITECTURAL

A001 — DOOR SCHEDULE, VISUAL DOOR TYPES, HOLLOW METAL FRAME SCHEDULE, ALUMINUM FRAME SCHEDULE, DOOR DETAILS, ALUMINUM FRAME DETAILS

A100 — DEMOLITION PLAN, DEMOLITION NOTES, EXISTING BUILDING SECTION

A101 — FLOOR PLAN, VISUAL WALL TYPES, FINISH SCHEDULE, PLAN DETAILS

A102 — ROOF PLAN, ROOF DETAILS

A200 — EXTERIOR BUILDING ELEVATIONS, MILLWORK ELEVATION, MILLWORK SECTIONS

A201 — BUILDING SECTIONS, DETAIL

A400 — REFLECTED CEILING PLAN, CEILING DETAILS

A500 — WALL SECTIONS

A501 — CANOPY SECTION, COLUMN SECTION

STRUCTURAL

S100 — STRUCTURAL NOTES, LINTEL SCHEDULE

S101 — FOUNDATION PLAN, ROOF FRAMING PLAN, FRAMING ELEVATION

S201 — FOUNDATION SECTIONS

S301 — FRAMING SECTIONS

MECHANICAL / ELECTRICAL

ME101 — LIGHTING PLAN, HVAC PLAN, MECHANICAL SCHEDULES, LIGHT FIXTURE SCHEDULE, DETAILS

BRACKETT KRENNERICH architects

100 East Huntington, Suite D P.O. Box 1656 Jonesboro, Arkansas 72403-1656

870-932-0571 Fax 870-932-0976 Email www.bkarchs.com

SET NUMBER: 16

S:\Projects\Current\15708- ASU Charles Luter Academic Success Center\Revit - Datacad\Bldg-CAD\ME0TB.2010 kyle

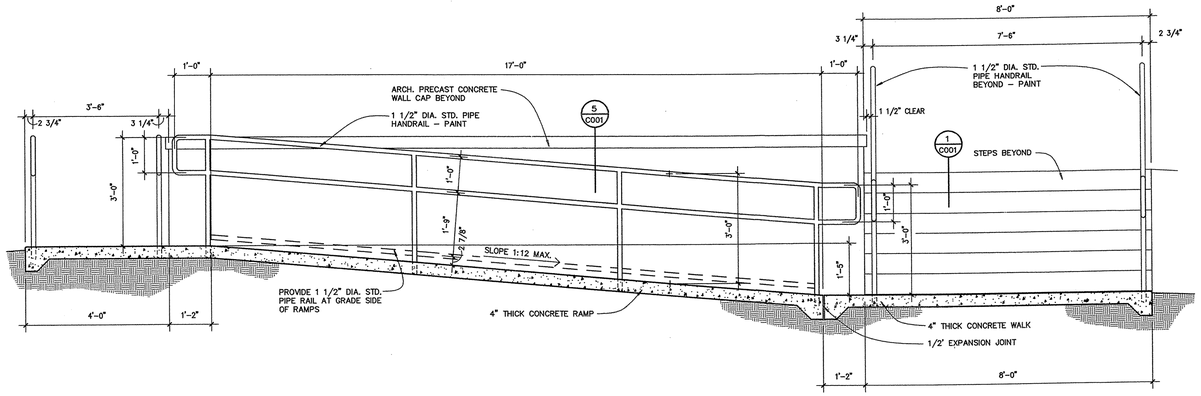

ramp detail 2

SCALE: 1/2" = 1'-0"

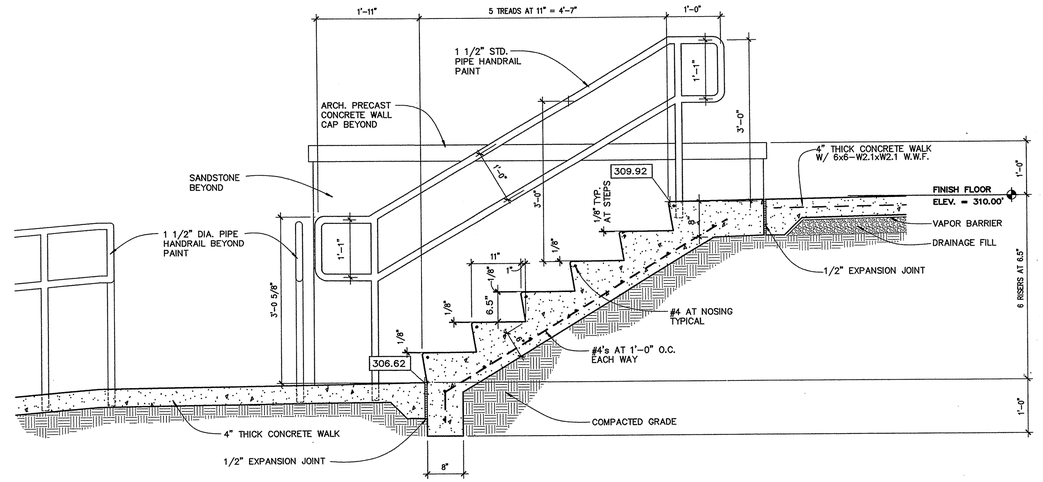

step detail 1

SCALE: 3/4" = 1'-0"

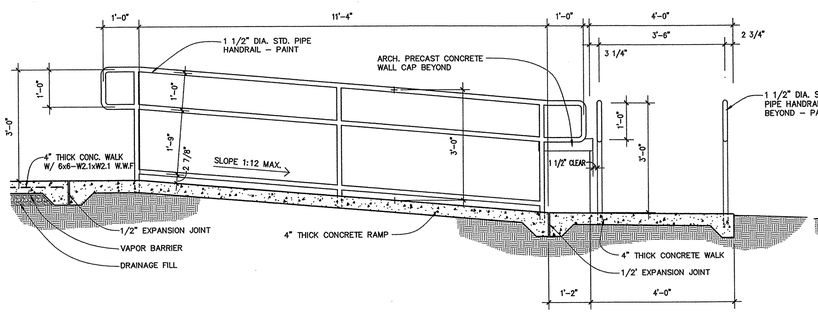

ramp detail 4

SCALE: 1/2" = 1'-0"

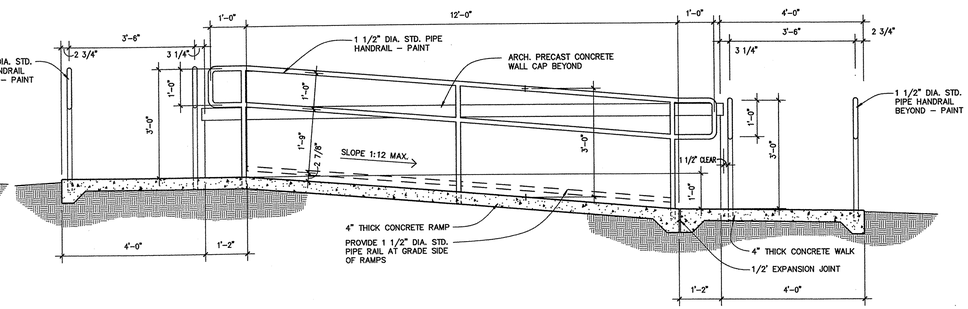

ramp detail 3

SCALE: 1/2" = 1'-0"

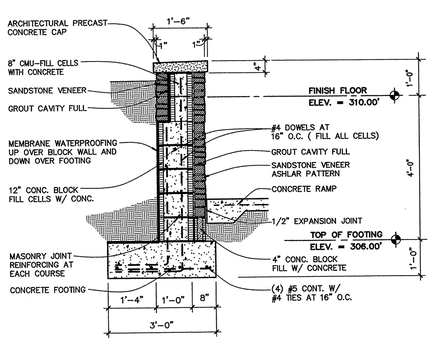

wall section 5

SCALE: 1/2" = 1'-0"

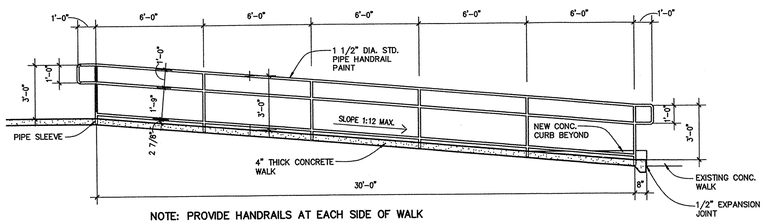

NOTE: PROVIDE HANDRAILS AT EACH SIDE OF WALK

walk handrail elevation

SCALE: 1/4" = 1'-0"

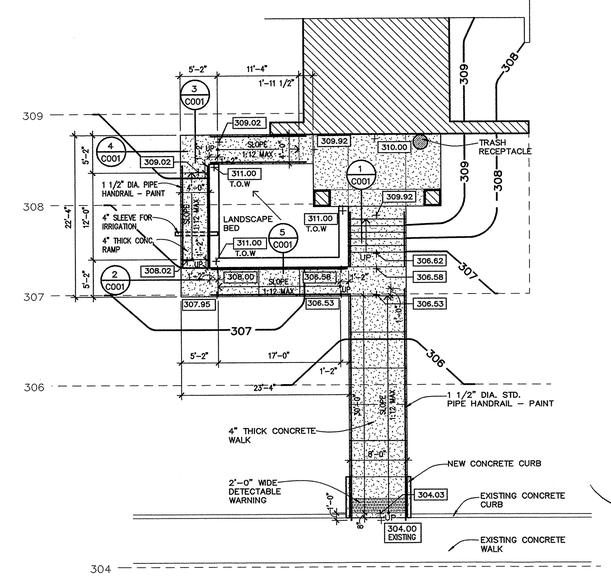

site plan

SCALE: 1" = 10'-0"

CHARLES F. LUTER FAMILY ACADEMIC SUCCESS CENTER

ADDITIONS TO ATHLETIC COMPLEX SOUTH ENTRY

ARKANSAS STATE UNIVERSITY JONESBORO, ARKANSAS

BRACKETT KRENNERICH architects

100 East Huntington, Suite D P.O. Box 1655 Jonesboro, Arkansas 72403-1655

870-932-0971 Fax 870-932-0976 www.bkarchts.com

BRACKETT-KRENNERICH & ASSOCIATES, P.A. REGISTERED ARCHITECTS C13 ARKANSAS

18 JUNE 2010

Commission Number 15708

C001

Revised: June 18, 2010

Date: February 13, 2009

S:\Projects\Current\15708- ASU Charles Luter Academic Success Center\Revit - D:\Users\Kyle\Desktop\Kyle-CEL\15708.rvt kyle

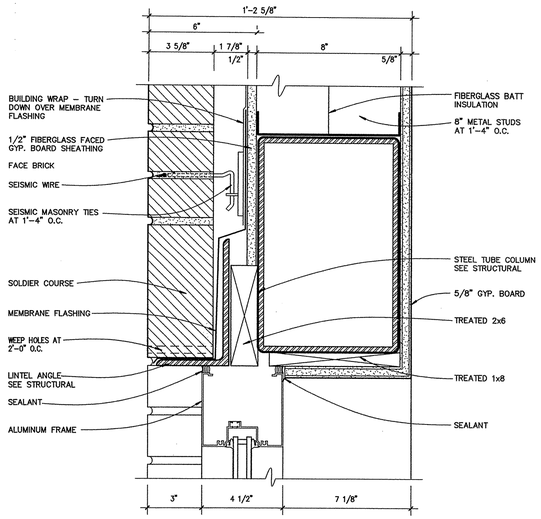

head detail (8)

SCALE: 3" = 1'-0"

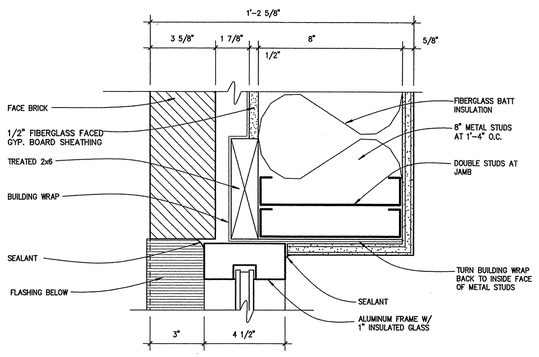

jamb detail (9)

SCALE: 3" = 1'-0"

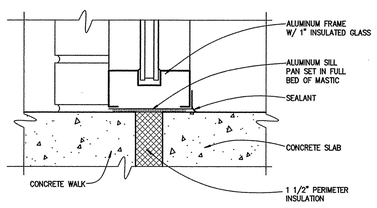

sill detail (10)

SCALE: 3" = 1'-0"

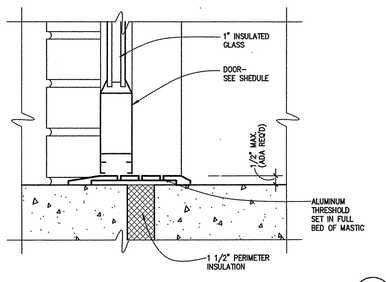

sill detail (11)

SCALE: 3" = 1'-0"

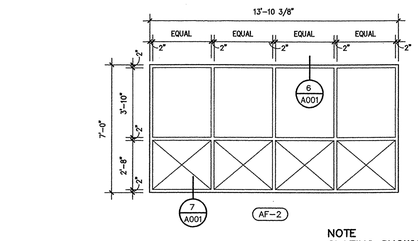

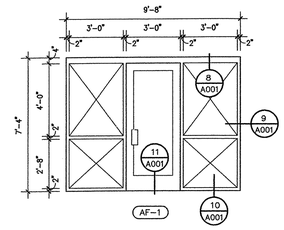

NOTE
GLAZING SHOWN WITH 'X' DENOTES TEMPERED GLASS

aluminum frame schedule

SCALE: 1/4" = 1'-0"

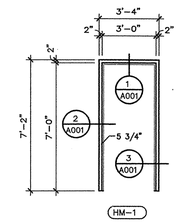

hollow metal frame schedule

SCALE: 1/4" = 1'-0"

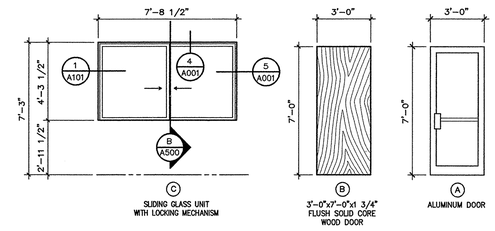

visual door types

SCALE: 1/4" = 1'-0"

DOOR SCHEDULE

OPNG NMBR.	DOOR TYPE	DOOR STYLE	DOOR THRESH	DOOR FRAME	DOOR FRAME DEPTH	DETAILS HEAD	DETAILS JAMB	DETAILS SILL	LBL	HDWE SET	REMARKS
1	A	SINGLE	ALUM.	AF-1	4 1/2"	8/A001	9/A001	11/A001	—	1	
2	B	SINGLE	—	HM-1	5 3/4"	1/A001	2&3/A001	—	—	2	
3	C	—	—	—	—	4/A001	5/A001	8/A500	—	—	

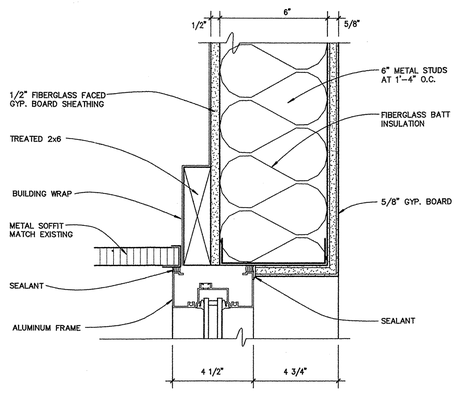

head detail (6)

SCALE: 3" = 1'-0"

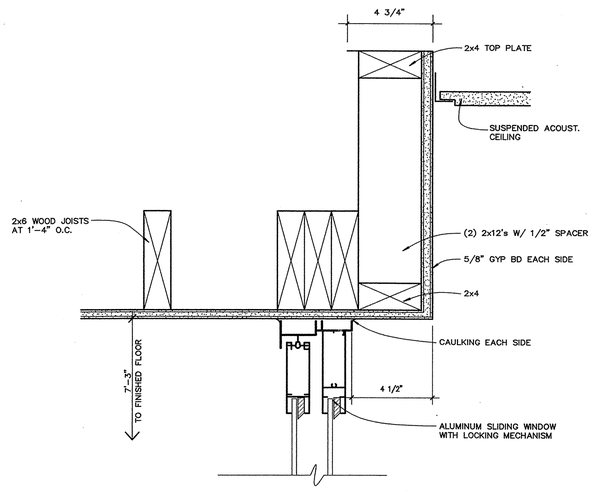

head detail (4)

SCALE: 3" = 1'-0"

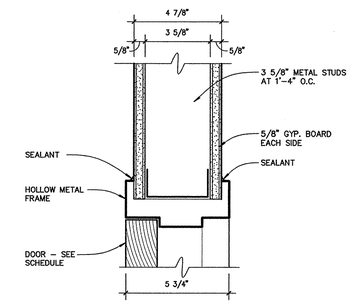

head detail (1)

SCALE: 3" = 1'-0"

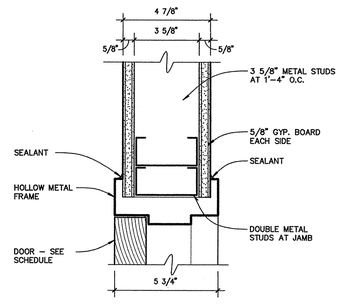

jamb detail (2)

SCALE: 3" = 1'-0"

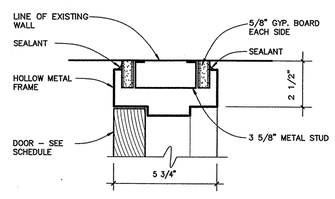

jamb detail (3)

SCALE: 3" = 1'-0"

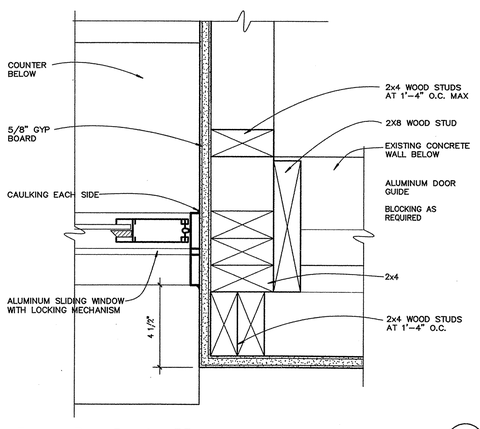

jamb detail (5)

SCALE: 3" = 1'-0"

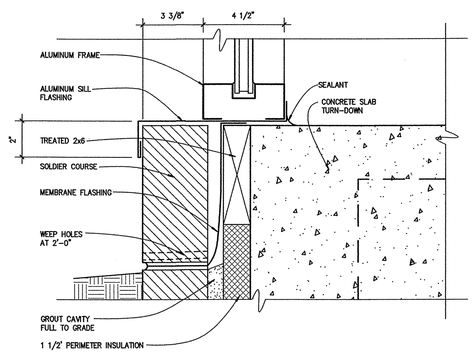

sill detail (7)

SCALE: 3" = 1'-0"

CHARLES F. LUTER FAMILY ACADEMIC SUCCESS CENTER

ADDITIONS TO ATHLETIC COMPLEX SOUTH ENTRY

ARKANSAS STATE UNIVERSITY JONESBORO, ARKANSAS

BRACKETT KRENNERICH architects

100 East Huntington, Suite D P.O. Box 1655 Jonesboro, Arkansas 72403-1655

870-932-0571 Fax 870-932-0975 www.bkarchts.com

BRACKETT-KRENNERICH & ASSOCIATES, P.A.
REGISTERED ARCHITECTS
CI3
ARKANSAS
18 June 2010

Commission Number 15708

A001

Revised: June 18, 2010
Date: February 13, 2009

S:\Projects\Current\15708- ASU Charles Luter Academic Success Center\Revit - D:\Users\Kyle\Local Files\Temp\AcPublish_2664\A001.rvt kyle

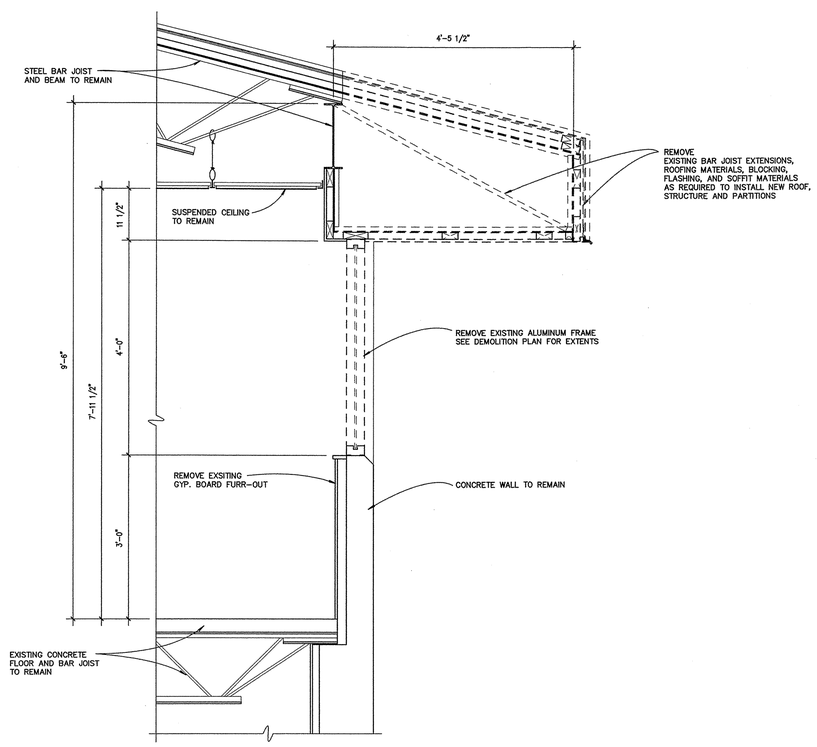

existing wall section (A)

SCALE: 3/4" = 1'-0"

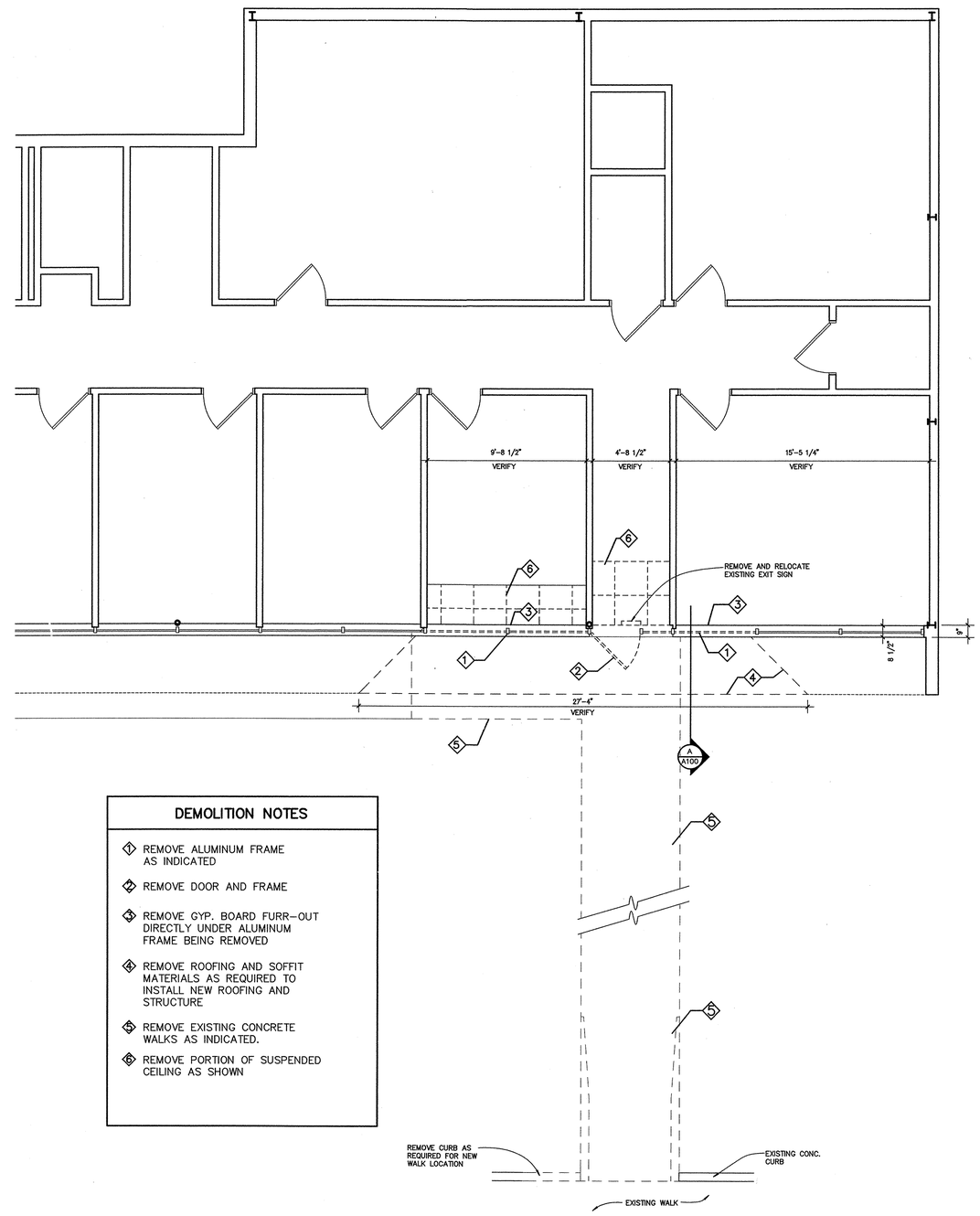

DEMOLITION NOTES

1. REMOVE ALUMINUM FRAME AS INDICATED
2. REMOVE DOOR AND FRAME
3. REMOVE GYP. BOARD FURR-OUT DIRECTLY UNDER ALUMINUM FRAME BEING REMOVED
4. REMOVE ROOFING AND SOFFIT MATERIALS AS REQUIRED TO INSTALL NEW ROOFING AND STRUCTURE
5. REMOVE EXISTING CONCRETE WALKS AS INDICATED.
6. REMOVE PORTION OF SUSPENDED CEILING AS SHOWN

n

demolition floor plan

SCALE: 1/4" = 1'-0"

CHARLES F. LUTER FAMILY ACADEMIC SUCCESS CENTER

ADDITIONS TO ATHLETIC COMPLEX SOUTH ENTRY

ARKANSAS STATE UNIVERSITY JONESBORO, ARKANSAS

BRACKETT KRENNERICH architects

100 East Huntington, Suite D P.O. Box 1855 Jonesboro, Arkansas 72403-1855

870-932-0571 Fax 870-932-0975 www.bkarchts.com

BRACKETT-KRENNERICH & ASSOCIATES P.A. REGISTERED ARCHITECTS 213 ARKANSAS

18 JUNE 2010

Commission Number 15708

A100

Revised: June 18, 2010

Date: February 13, 2009

S:\Projects\Current\15708- ASU Charles Luter Academic Success Center\Revit - D:\Backup\Jake CER_KYDD.Docs kyle

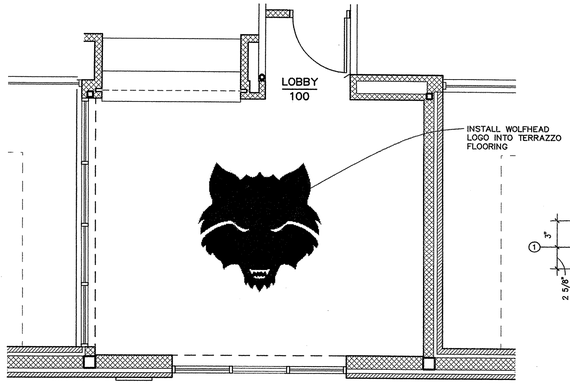

n finish floor plan

SCALE: 1/4" = 1'-0"

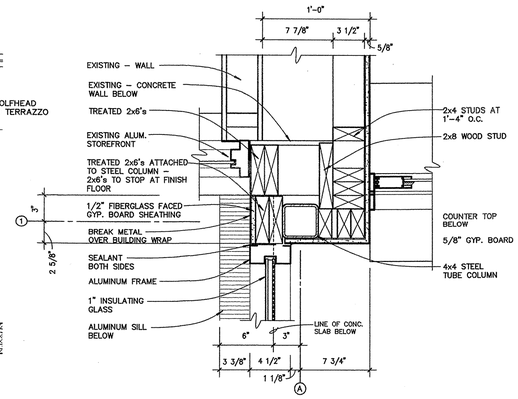

detail 1

SCALE: 1 1/2" = 1'-0"

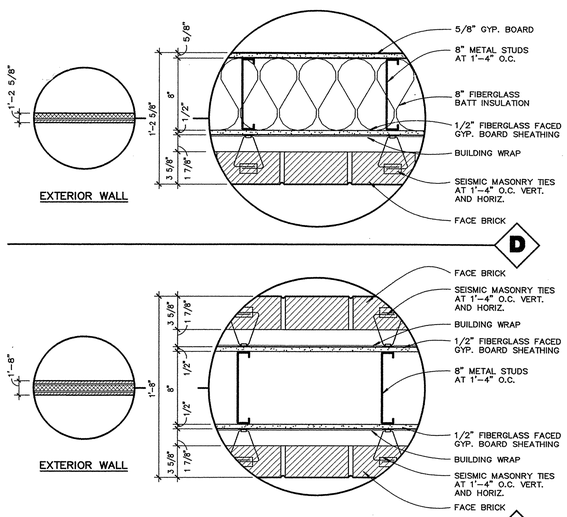

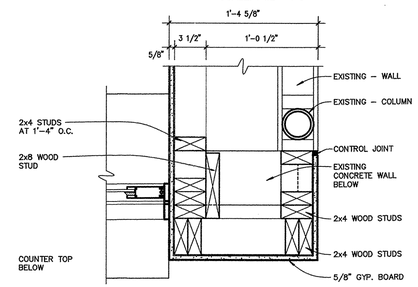

detail 2

SCALE: 1 1/2" = 1'-0"

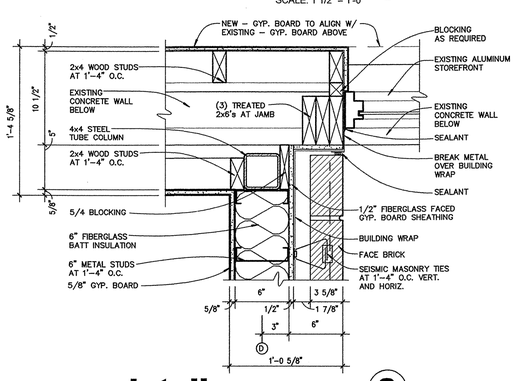

detail 3

SCALE: 1 1/2" = 1'-0"

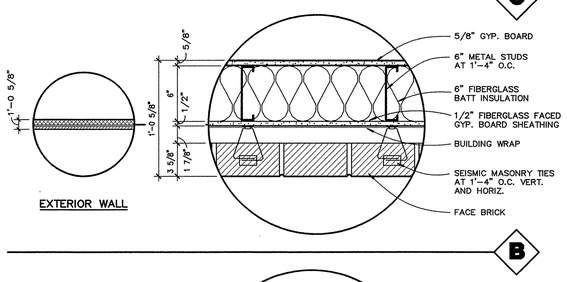

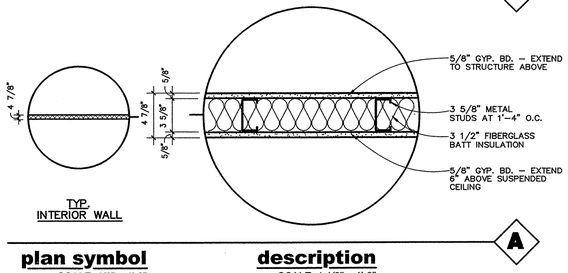

plan symbol SCALE: 1/8" = 1'-0"

description SCALE: 1 1/2" = 1'-0"

visual wall types

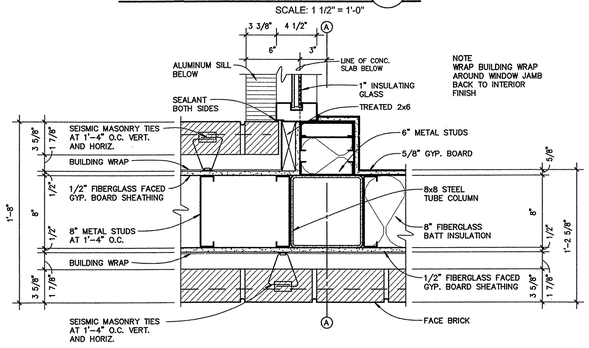

detail 4

SCALE: 1 1/2" = 1'-0"

FINISH SCHEDULE

ROOM NO.	ROOM NAME	FLOOR	BASE	WALLS	CEILING HEIGHT	CEILING	REMARKS
100	LOBBY	TERRAZZO	RUBBER	PAINTED GYPSUM BOARD	8'–0"	2x2 SUSPENDED ACOUSTICAL CEILING	① INSTALL NEW RUBBER BASE ON NEW WALLS (MATCH EXISTING)
101	RECEPTION	EXISTING TO REMAIN	RUBBER ON NEW WALLS ①	PAINTED GYPSUM BOARD ②	EXISTING	EXISTING; NEW PAINTED GYP. BOARD FURR DOWN ③	② PAINT NEW WALLS IN EXISTING ROOM REPAIR ANY DAMAGED WALLS – PAINT
102	CORRIDOR	EXISTING TO REMAIN	RUBBER ON NEW WALLS ①	PAINTED GYPSUM BOARD ②	EXISTING	EXISTING ③	③ REPLACE DAMAGED CEILING GRID AND TILES AS REQUIRED AFTER CONSTUCTION OF NEW WALL
103	OFFICE	EXISTING TO REMAIN	RUBBER ON NEW WALLS ①	PAINTED GYPSUM BOARD ②	EXISTING	EXISTING ③	

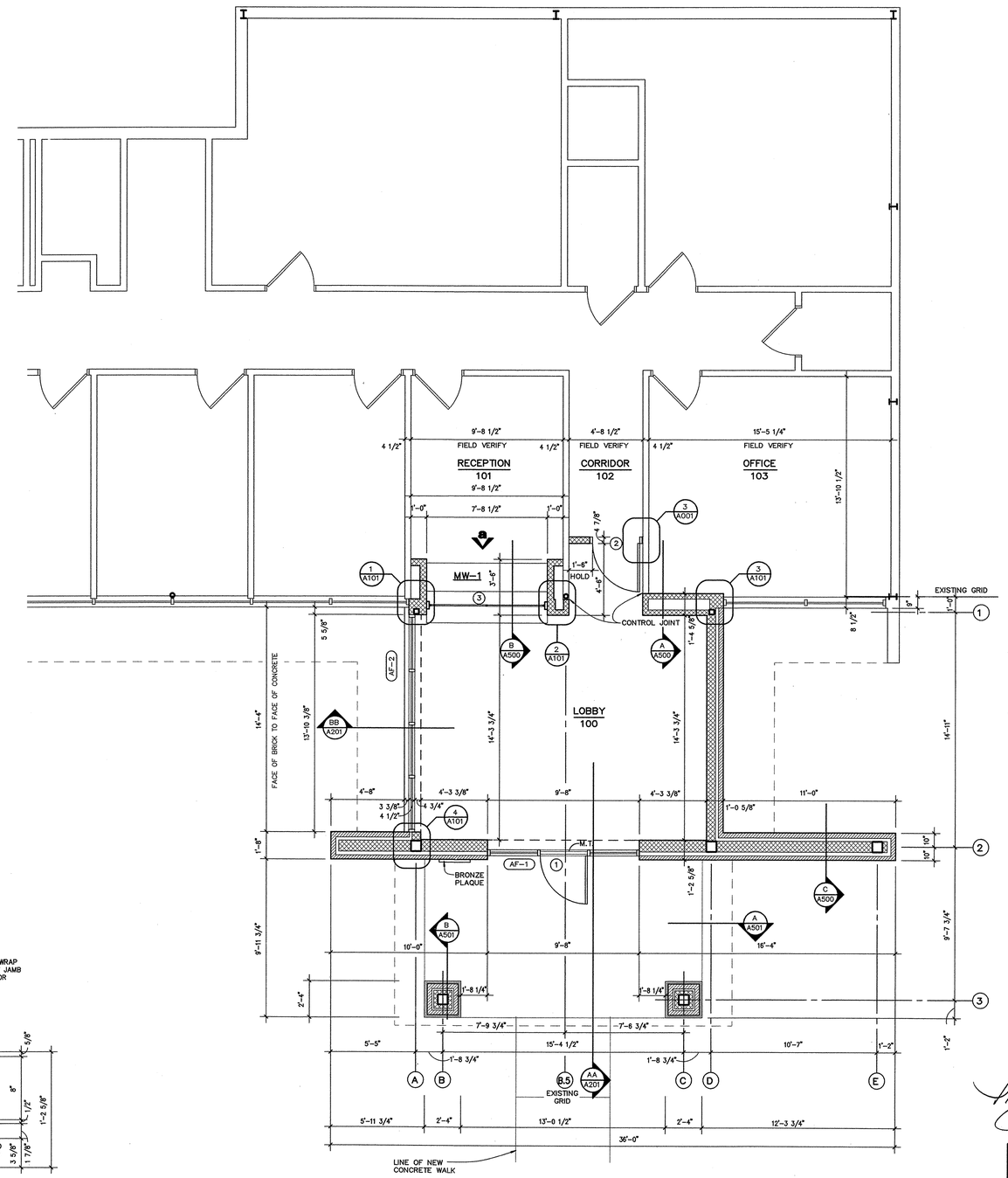

n floor plan

SCALE: 1/4" = 1'-0"

CHARLES F. LUTER FAMILY ACADEMIC SUCCESS CENTER

ADDITIONS TO ATHLETIC COMPLEX SOUTH ENTRY

ARKANSAS STATE UNIVERSITY JONESBORO, ARKANSAS

BRACKETT KRENNERICH architects

100 East Huntington, Suite D P.O. Box 1655 Jonesboro, Arkansas 72403-1655

870-932-0571 Fax 870-932-0975 www.bkarchits.com

BRACKETT-KRENNERICH & ASSOCIATES, REGISTERED ARCHITECTS C13, ARKANSAS

18 JUNE 2010

Commission Number 15708

A101

Revised: June 18, 2010

Date: February 13, 2009

S:\Projects\Current\15708- ASU Charles Luter Academic Success Center\Revit - Discovery\ASU-CSC_V2010.rvt kyle

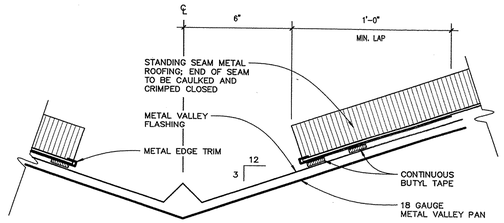

detail at valley flashing (4)

SCALE: 3" = 1'-0"

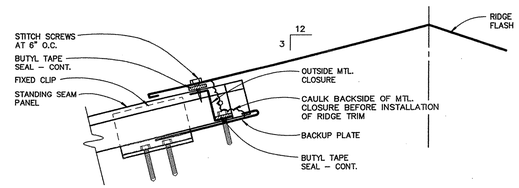

ridge detail (3)

SCALE: 3" = 1'-0"

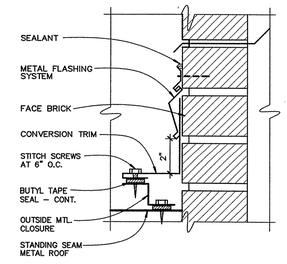

flashing detail (2)

SCALE: 3" = 1'-0"

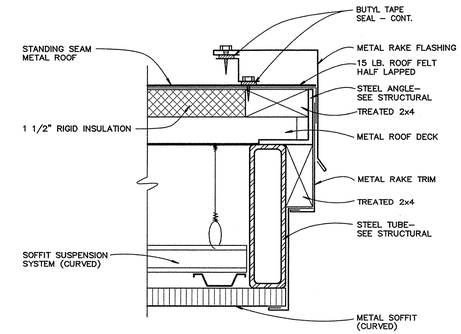

rake detail (1)

SCALE: 3" = 1'-0"

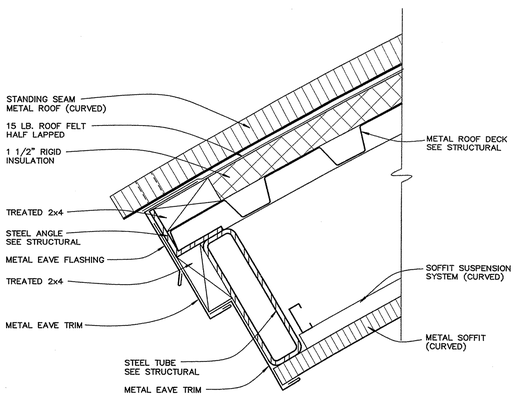

eave detail (5)

SCALE: 3" = 1'-0"

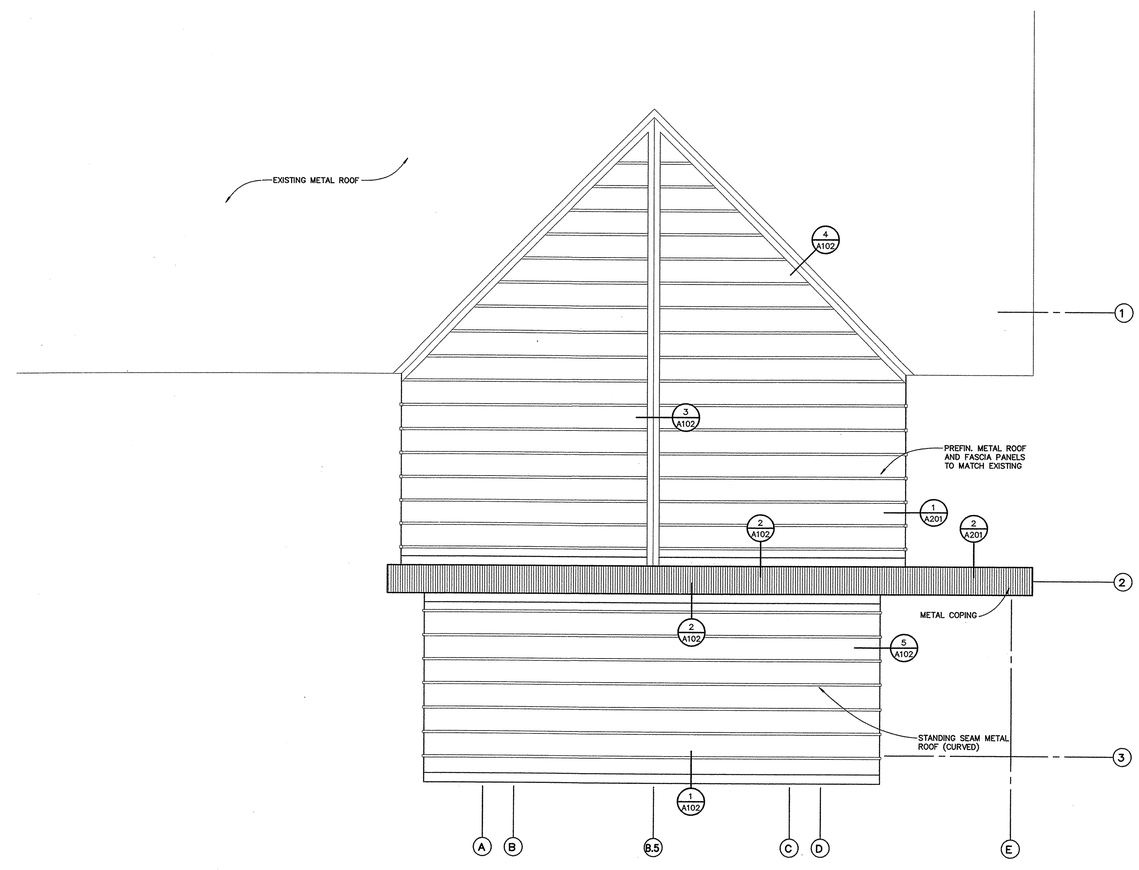

n

roof plan

SCALE: 1/4" = 1'-0"

CHARLES F. LUTER FAMILY ACADEMIC SUCCESS CENTER

ADDITIONS TO ATHLETIC COMPLEX SOUTH ENTRY

ARKANSAS STATE UNIVERSITY JONESBORO, ARKANSAS

BRACKETT KRENNERICH architects
100 East Huntington, Suite D P.O. Box 1655 Jonesboro, Arkansas 72403-1655
870-932-0571 Fax 870-932-0976 www.bkarchts.com

BRACKETT-KRENNERICH & ASSOCIATES, P.A. REGISTERED ARCHITECTS C13 ARKANSAS
18 June 2010

Commission Number 15708

A102

Revised: June 18, 2010
Date: February 13, 2009

s:\Projects\Current\15708- ASU Charles Luter Academic Success Center\Revit - D:\Design\Arch-035,A002.rvt.rec kyle

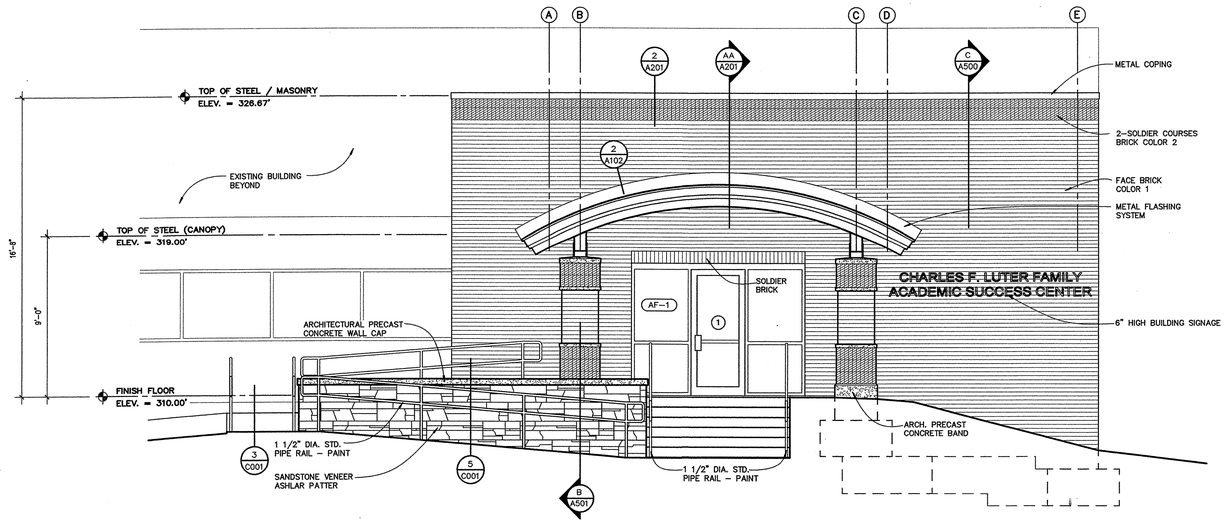

south elevation

SCALE: 1/4" = 1'-0"

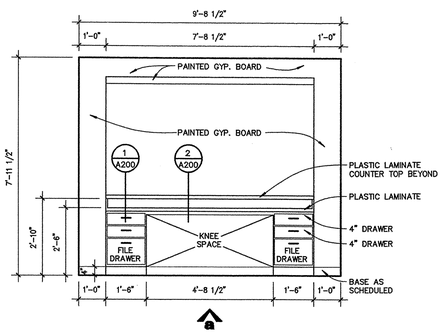

millwork no. 1

RECEPTION 101

millwork elevations

SCALE: 3/8" = 1'-0"

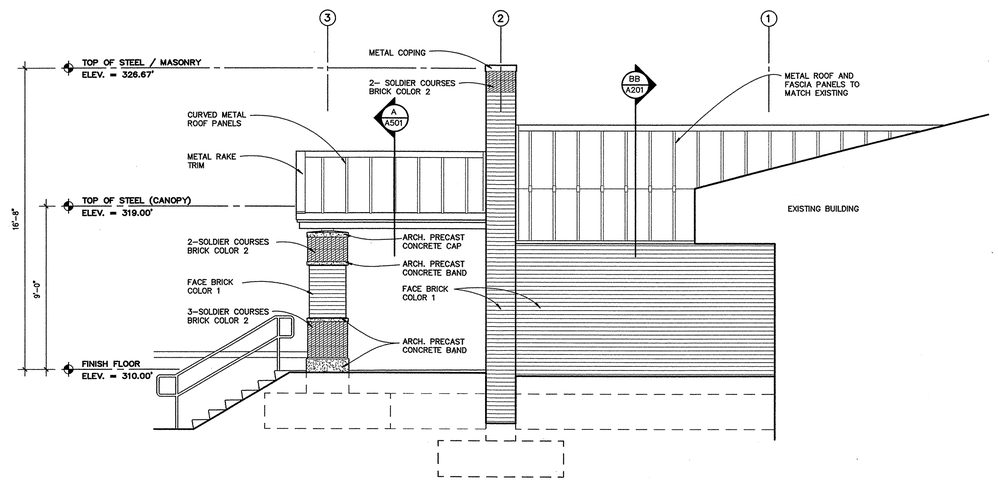

east elevation

SCALE: 1/4" = 1'-0"

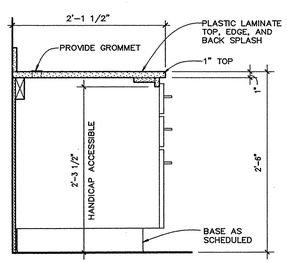

cabinet section 2

SCALE: 1" = 1'-0"

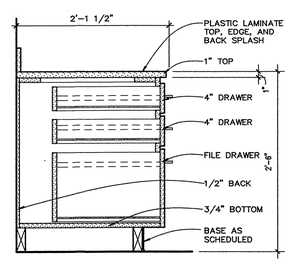

cabinet section 1

SCALE: 1" = 1'-0"

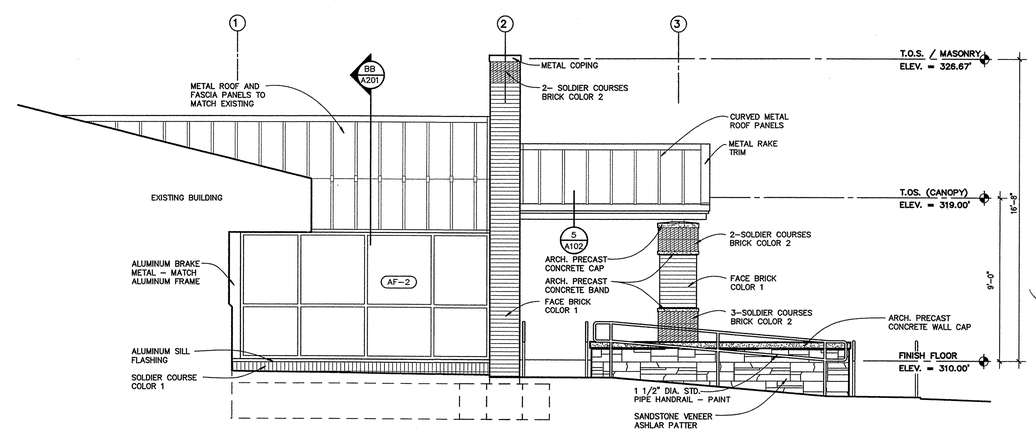

west elevation

SCALE: 1/4" = 1'-0"

CHARLES F. LUTER FAMILY ACADEMIC SUCCESS CENTER

ADDITIONS TO ATHLETIC COMPLEX SOUTH ENTRY

ARKANSAS STATE UNIVERSITY JONESBORO, ARKANSAS

BRACKETT KRENNERICH architects

100 East Huntington, Suite D P.O. Box 1655 Jonesboro, Arkansas 72403-1655

870-932-0571 Fax: 870-932-0975 www.bkarchts.com

BRACKETT-KRENNERICH & ASSOCIATES, P.A.
REGISTERED ARCHITECTS
C13

18 JUNE 2010

Commission Number
15708

A200

Revised: June 18, 2010
Date: February 13, 2009

S:\Projects\Current\15708- ASU Charles Luter Academic Success Center\Revit - Design\Charles Luter Academic Success Center.rvt kyle

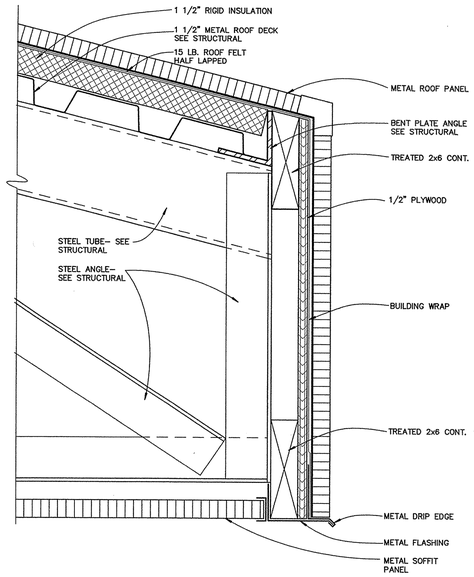

eave detail 1

SCALE: 3" = 1'-0"

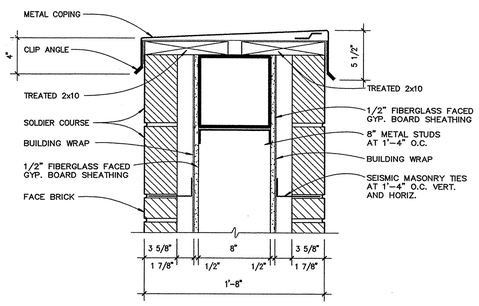

coping detail 2

SCALE: 1 1/2" = 1'-0"

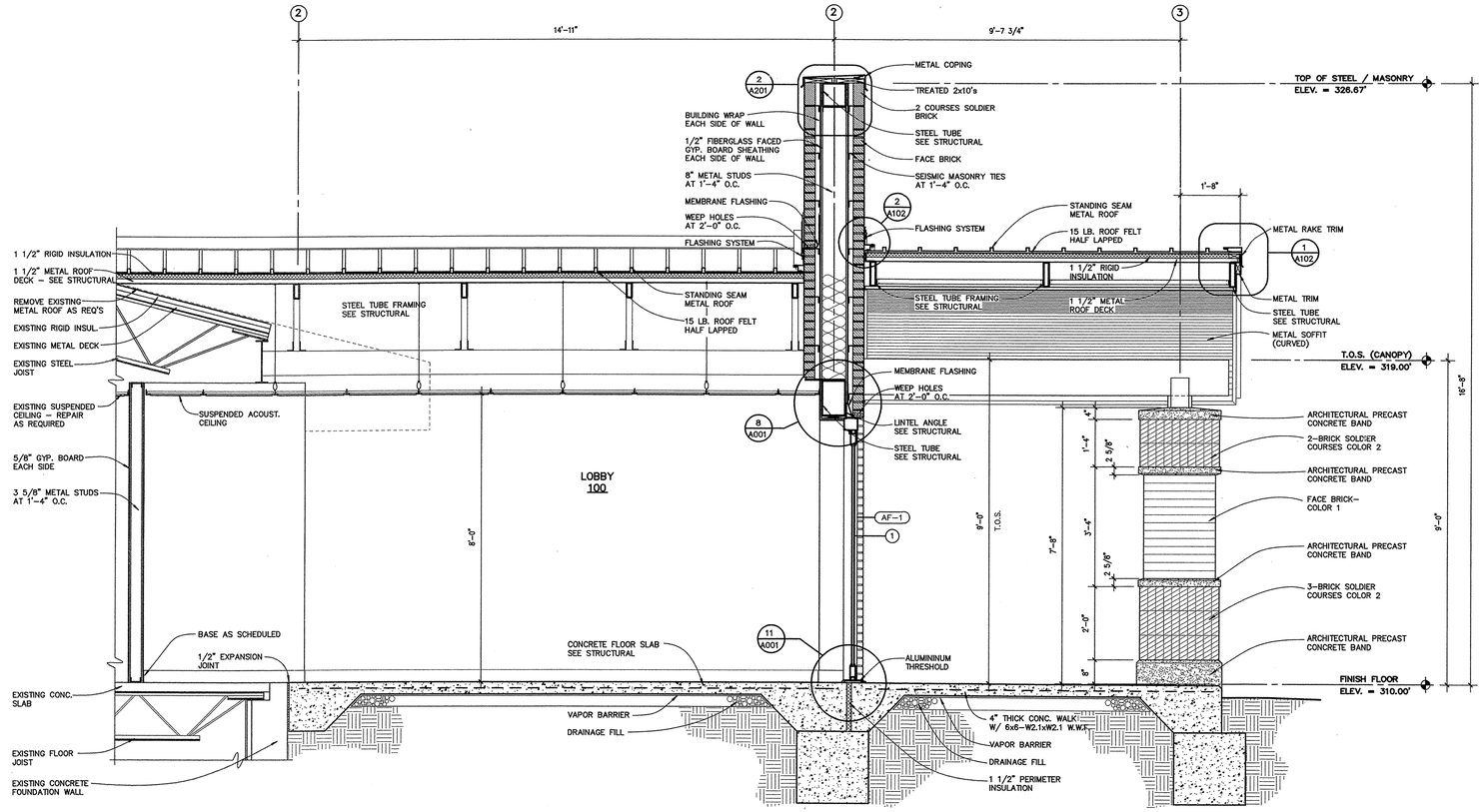

building section AA

SCALE: 1/2" = 1'-0"

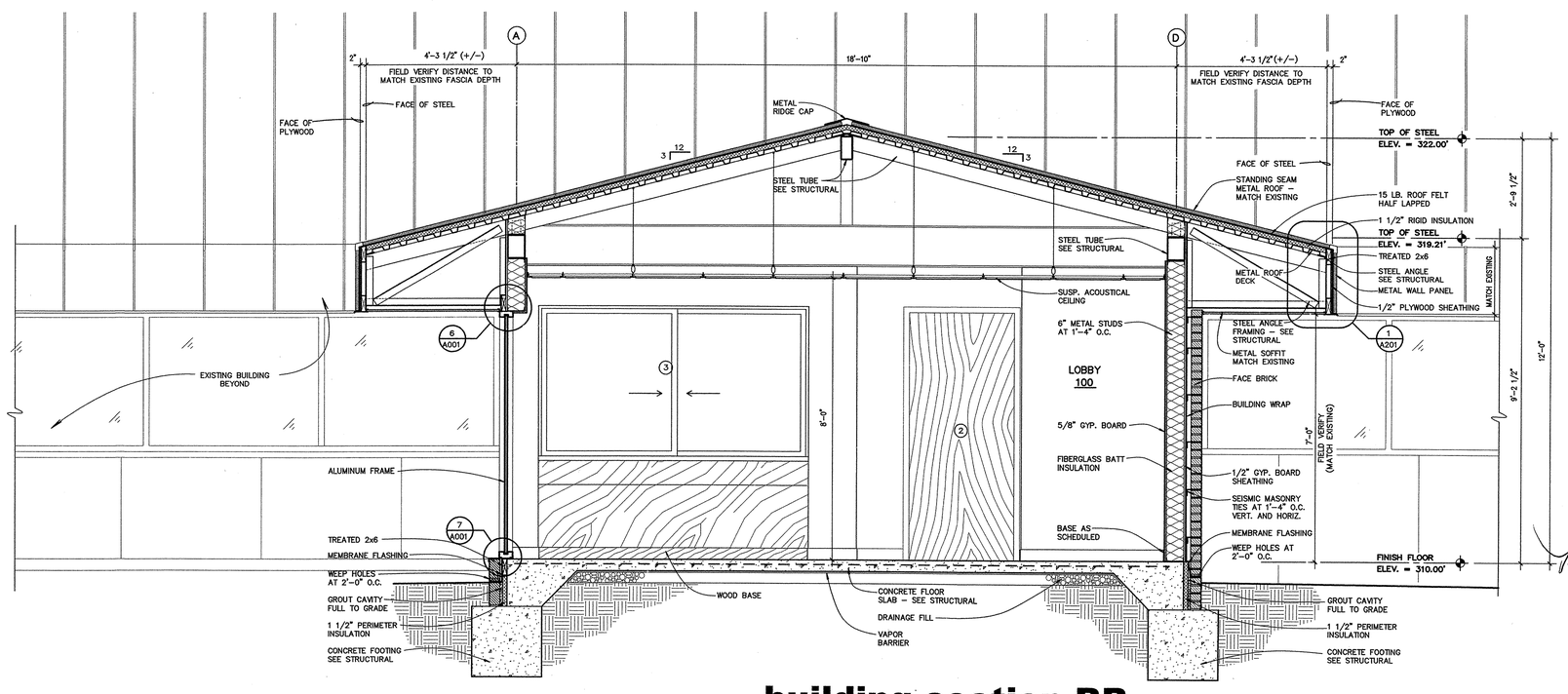

building section BB

SCALE: 1/2" = 1'-0"

CHARLES F. LUTER FAMILY ACADEMIC SUCCESS CENTER

ADDITIONS TO ATHLETIC COMPLEX SOUTH ENTRY

ARKANSAS STATE UNIVERSITY JONESBORO, ARKANSAS

BRACKETT KRENNERICH architects

100 East Huntington, Suite D P.O. Box 1655 Jonesboro, Arkansas 72403-1655

870-932-0571 Fax 870-932-0975 www.bkarchits.com

BRACKETT & KRENNERICH & ASSOCIATES
REGISTERED ARCHITECTS
C13
ARKANSAS

Commission Number 15708

A201

Revised: June 18, 2010
Date: February 13, 2009

S:\Projects\Current\15708- ASU Charles Luter Academic Success Center\Revit - Drawings\Volume-CD\A201Dsec kyle

LEGEND

ARCHITECTURAL

- 2x4 SUSPENDED ACOUSTICAL CEILING SYSTEM
- 2x2 SUSPENDED ACOUSTICAL CEILING SYSTEM
- GYPSUM BOARD
- EXTERIOR INSULATION FINISH SYSTEM
- OPEN TO STRUCTURE ABOVE

MECHANICAL

- RETURN AIR GRILLE
- SUPPLY AIR GRILLE
- SUPPLY AIR GRILLE
- EXAUST FAN

SEE MECHANICAL PLAN FOR FURTHER DETAILS AND INFO.

ELECTRICAL

- INCANDESCENT LIGHT FIXTURE
- FLUORESCENT LIGHT FIXTURE
- FLUORESCENT LIGHT FIXTURE
- CEILING MOUNT EXIT SIGN

SEE LIGHTING PLAN FOR FURTHER DETAILS AND INFO.

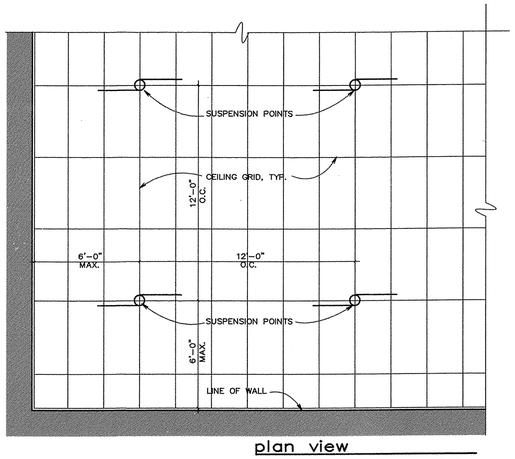

plan view

NO SCALE

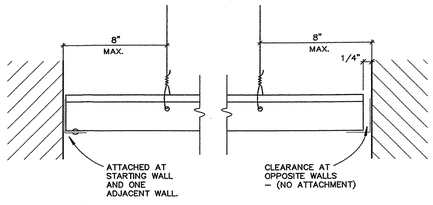

runners at walls

NO SCALE

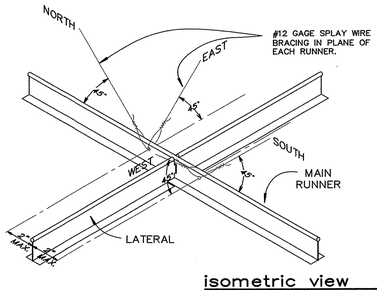

isometric view

NO SCALE

NOTE: CEILINGS OF 144 SQ. FT. OR LESS, SURROUNDED BY WALLS THAT CONNECT DIRECTLY TO THE STRUCTURE ABOVE, ARE EXCLUDED FROM THIS RECOMMENDED PRACTICE.

detail at ceilings (1)

TYPICAL ALL CEILINGS

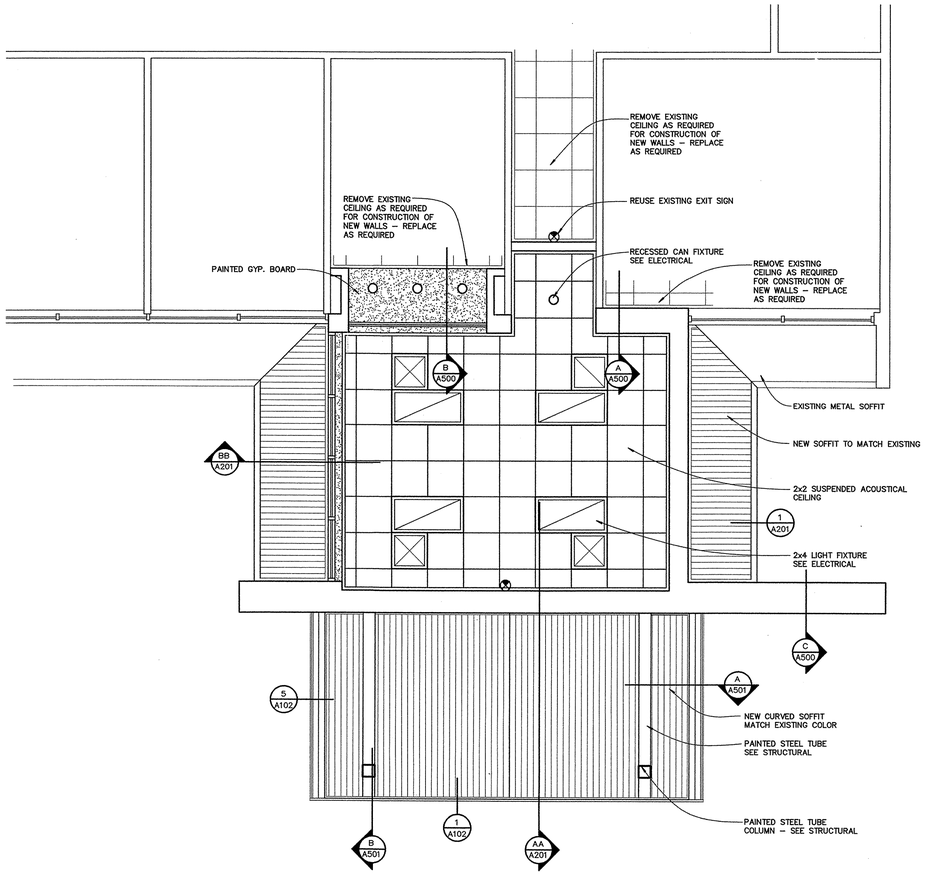

n

reflected ceiling plan

SCALE: 1/4" = 1'-0"

CHARLES F. LUTER FAMILY ACADEMIC SUCCESS CENTER

ADDITIONS TO ATHLETIC COMPLEX SOUTH ENTRY

ARKANSAS STATE UNIVERSITY JONESBORO, ARKANSAS

BRACKETT KRENNERICH architects

100 East Huntington, Suite D P.O. Box 1655 Jonesboro, Arkansas 72403-1655

870-932-0671 Fax 870-932-0976 www.bkarchts.com

BRACKETT-KRENNERICH & ASSOCIATES, P.A. REGISTERED ARCHITECTS C13 ARKANSAS

18 JUNE 2010

Commission Number 15708

A400

Revised: June 18, 2010

Date: February 13, 2009

S:\Projects\Current\15708- ASU Charles Luter Academic Success Center\Revit - [illegible] kyle

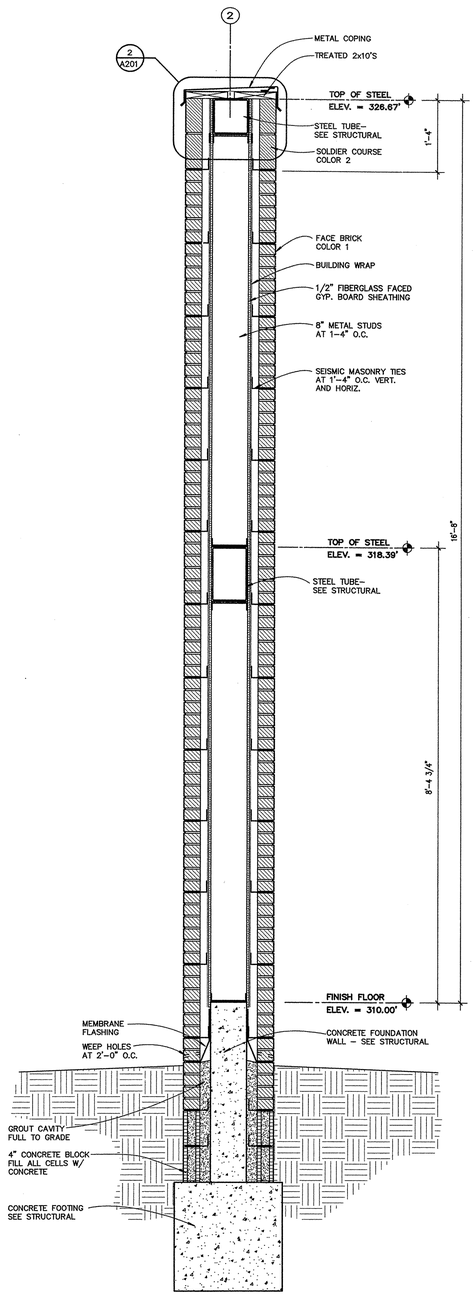

wall section C

SCALE: 3/4" = 1'-0"

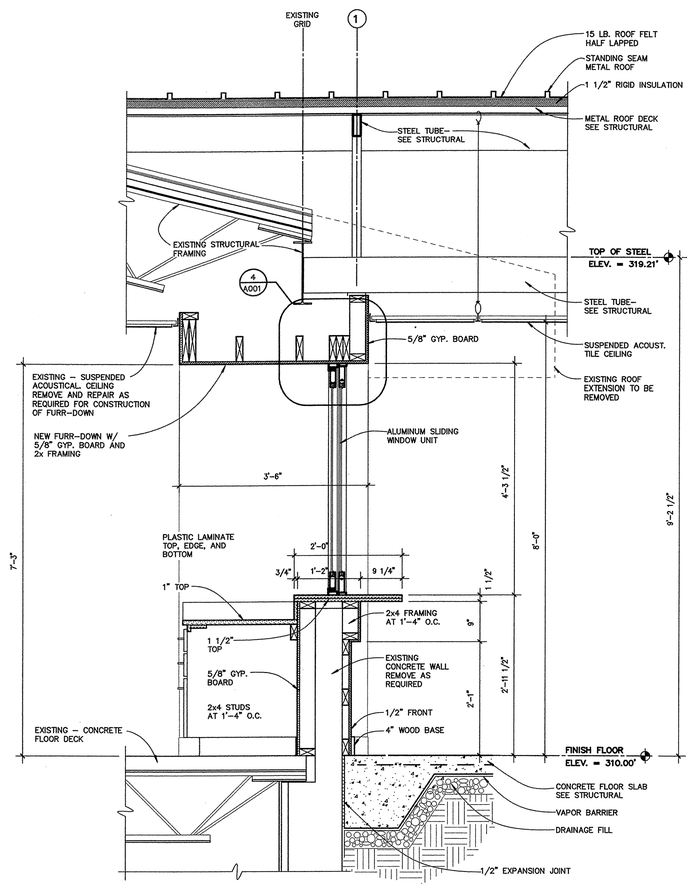

wall section B

SCALE: 3/4" = 1'-0"

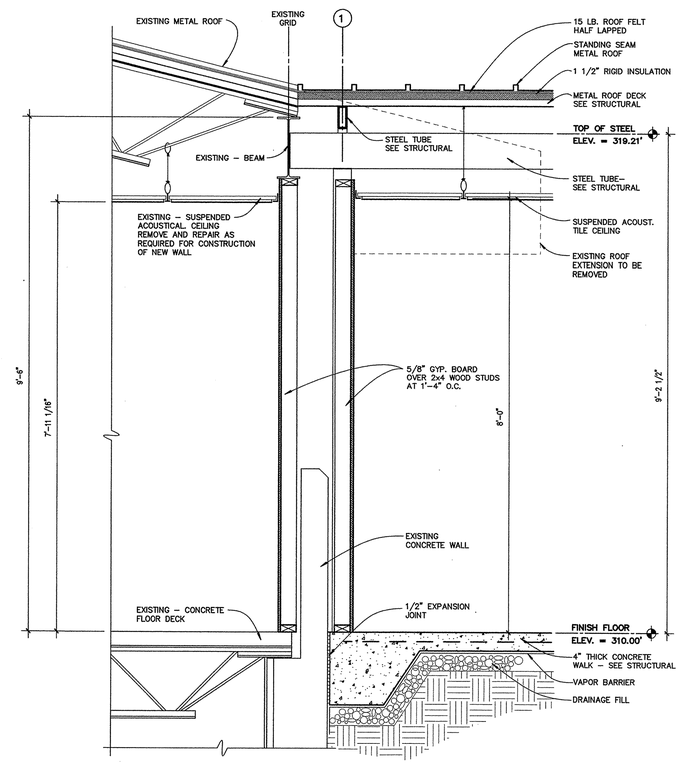

wall section A

SCALE: 3/4" = 1'-0"

CHARLES F. LUTER FAMILY ACADEMIC SUCCESS CENTER

ADDITIONS TO ATHLETIC COMPLEX SOUTH ENTRY

ARKANSAS STATE UNIVERSITY JONESBORO, ARKANSAS

BRACKETT KRENNERICH architects

100 East Huntington, Suite D P.O. Box 1655 Jonesboro, Arkansas 72403–1655

870–932–0871 Fax 870–932–0975 www.bkarchts.com

BRACKETT–KRENNERICH & ASSOCIATES, P.A.
REGISTERED ARCHITECTS
C18
ARKANSAS

18 JUNE 2010

Commission Number
15708

A500

Revised: June 18, 2010
Date: February 13, 2009

S:\Projects\Current\15708- ASU Charles Luter Academic Success Center\Revit - Design\Wall-Sections.dwg kyle

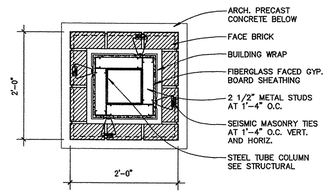

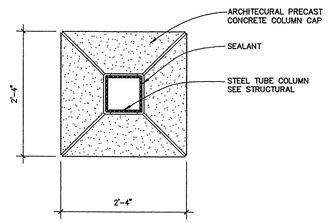

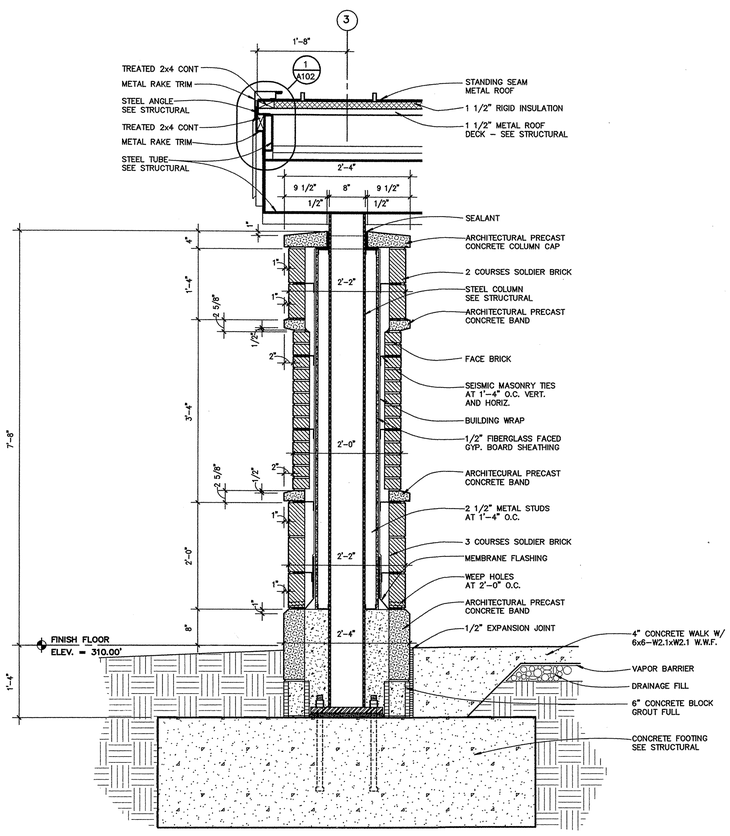

column section (B)

SCALE: 3/4" = 1'-0"

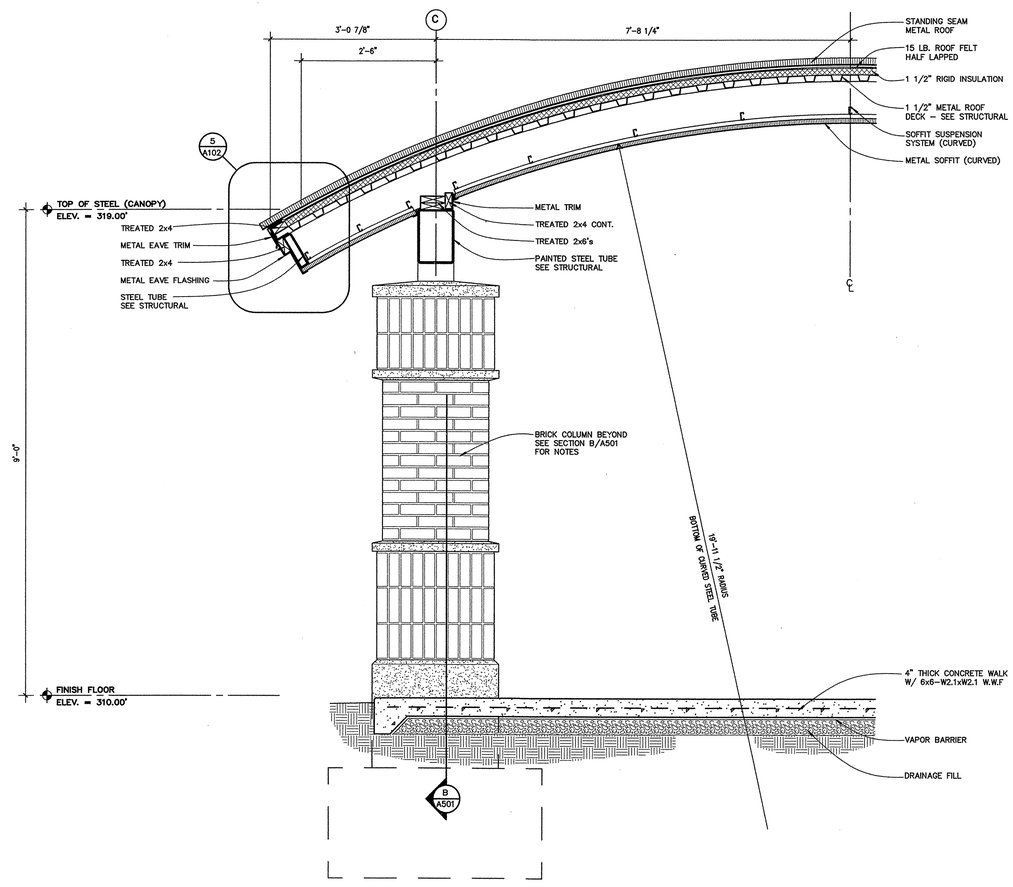

canopy section (A)

SCALE: 3/4" = 1'-0"

CHARLES F. LUTER FAMILY ACADEMIC SUCCESS CENTER

ADDITIONS TO ATHLETIC COMPLEX SOUTH ENTRY

ARKANSAS STATE UNIVERSITY JONESBORO, ARKANSAS

BRACKETT KRENNERICH architects

100 East Huntington, Suite D P.O. Box 1655 Jonesboro, Arkansas 72403-1655

870-932-0571 Fax 870-932-0876 www.bkarchts.com

BRACKETT-KRENNERICH & ASSOCIATES, P.A. REGISTERED ARCHITECTS 213 ARKANSAS

18 June 2010

Commission Number 15708

A501

Revised: June 18, 2010

Date: February 13, 2009

S:\Projects\Current\15708- ASU Charles Luter Academic Success Center\Revit - Design\Arch\15708.rvt kyle

ABBREVIATION LEGEND

AR	ANCHOR RODS
ADD'L	ADDITIONAL
AFF	ABOVE FINISHED FLOOR
ARCH	ARCHITECTURAL
B PL	BASE PLATE
BF	BOTTOM OF FOOTING
BFF	BELOW FINISHED FLOOR
BLDG	BUILDING
BOS	BOTTOM OF STEEL
BOT	BOTTOM
BP	BOTTOM OF PIER
BRG	BEARING
BTWN	BETWEEN
C	CHANNEL SHAPE (i.e. C8x11.5)
C	COLD FORMED C SHAPE
C.G.	CENTER OF GRAVITY
CJ	(KEYED) CONTROL JOINT
CL	CENTERLINE
CLG	CEILING
CLR	CLEAR
CMU	CONCRETE MASONRY UNIT
COL	COLUMN
CONC	CONCRETE
CONN	CONNECTION
CONST	CONSTRUCTION
CONT	CONTINUOUS
DBL	DOUBLE
DEG	DEGREES
DIA	DIAMETER
DIM	DIMENSION
DLH	DEEP LONGSPAN JOIST (i.e. 60DLH12)
DSE	COLD-FORMED DOUBLE SLOPED EAVE STRUT
DTL	DETAIL
DWLS	DOWELS
EA	EACH
EBC	EXTENDED BOTTOM CHORD
EJ	EXPANSION JOINT
EL.	ELEVATION
ELEV	ELEVATION
EMBED	EMBEDMENT LENGTH
EOS	EDGE OF SLAB
ERECT	ERECTION
EWEF	EACH WAY, EACH FACE
EXIST	EXISTING
EXP	EXPANSION
EXT	EXTERIOR
FD	FLOOR DRAIN
FF	FINISHED FLOOR
FV	FIELD VERIFY
FAS	FROM ADJACENT SPAN
FFE	FINISHED FLOOR ELEVATION
FIN FLR EL	FINISHED FLOOR ELEVATION
FS	FAR SIDE
FTG	FOOTING
Fy	STEEL YIELD STRENGTH
G	JOIST GIRDER (i.e. 24G8N7K)
GA	GAUGE
GB	GRADE BEAM
HORIZ	HORIZONTAL
HP	H-PILE SHAPE (i.e. HP8x36)
HS	HEADED STUD
HSS	HOLLOW STRUCTURAL SECTION (STEEL)
I/S	INSIDE
INFO	INFORMATION
INT	INTERIOR
JBE	JOIST BEARING ELEVATION
JT	JOINT
k	K-JOIST (i.e. 12k1 S.J.)
K	KIPS (KILO-POUNDS)
k/ft	KIPS PER FOOT
kcs	CONSTANT SHEAR JOIST (i.e. 12kcs2 S.J.)
KD	KILN-DRIED
KSF	KIPS PER SQUARE FOOT
KSI	KIPS PER SQUARE INCH
L	ANGLE (i.e. L3x3x1/4)
LH	LONGSPAN JOIST (i.e. 32LH05)
LLH	LONG LEG HORIZONTAL
LLV	LONG LEG VERTICAL
LW	LONG WAY
LWB	LAM. WOOD BEAM (i.e. LWB3x11)
M.B.	METAL BUILDING
MC	MOMENT CONNECTION
MAT'L	MATERIAL
MAX	MAXIMUM
MC	MISC. CHANNEL SHAPE (i.e. MC12x10.6)
MECH	MECHANICAL
MFR	MANUFACTURER
MIN	MINIMUM
MISC.	MISCELLANEOUS
MPH	MILES PER HOUR
MTL	METAL
N	JOIST SPACES ON GIRDER
NO.	NUMBER
N.S.	NON-SHRINK
NS	NEAR SIDE
NTS	NOT TO SCALE
o.c.	ON CENTER
O/S	OUTSIDE
OD	OUTSIDE DIAMETER
OPNG	OPENING
OPP.	OPPOSITE
OSB	ORIENTED STRAND BOARD
P##	DRILLED PIER (##-DIA IN INCHES)
PF###	PAD FOOTING (###-SIZE IN FEET)
PT	POST-TENSIONED
PL	PLATE
PSF	POUNDS PER SQUARE FOOT
PSI	POUNDS PER SQUARE INCH
R	RADIUS
RE:	REFERENCE
REINF	REINFORCING
REQ'D	REQUIRED
RTU	ROOF TOP UNIT
S	STANDARD STEEL SHAPE (i.e. S10x35)
SCHED.	SCHEDULE
SECT	SECTION
SH	COLD-FORMED HAT SHAPE
SIM	SIMILAR
S.J.	STEEL JOIST (i.e. 12k1 S.J.)
SJ	(SAWN) CONTROL JOINT
SQ	SQUARE
SSE	COLD-FORMED SINGLE SLOPED EAVE STRUT
STIFF	STIFFENER
SW	SHORT WAY
T&B	TOP AND BOTTOM
T&G	TONGUE AND GROOVE
TEMP	TEMPERATURE
TF	TOP OF FOOTING
TOC	TOP OF COLUMN
TOC	TOP OF CONCRETE
TOM	TOP OF MASONRY
TOS	TOP OF STEEL
TP	TOP OF PIER
TS	TUBE STEEL SHAPE (i.e. TS4x4x1/4)
TYP	TYPICAL
UE	COLD-FORMED UNIVERSAL EAVE STRUT
UH	COLD-FORMED UNIVERSAL HAT SHAPE
UNO	UNLESS NOTED OTHERWISE
VER	VERIFY
VERT	VERTICAL
vs	VS JOIST (i.e. 2.5vs1)
W	WIDE FLANGE SHAPE (i.e. W8x10)
WP	WORK POINT
w/	WITH
w/o	WITHOUT
WT	T SHAPE (i.e. WT8x13)
WWF	WELDED WIRE FABRIC
Z	COLD FORMED Z SHAPE

STRUCTURAL NOTES

GENERAL NOTES

1. THE CONTRACTOR SHALL THOROUGHLY REVIEW ALL CONTRACT DOCUMENTS AND INFORM THE ARCHITECT OF CONFLICTS OR DISCREPANCIES PRIOR TO BIDDING, FABRICATION, AND CONSTRUCTION.
2. IN CASES OF DISCREPANCIES IN DIMENSIONS AND ELEVATIONS BETWEEN STRUCTURAL AND ARCHITECTURAL DRAWINGS, CONTRACTOR SHALL COORDINATE WITH THE ARCHITECT PRIOR TO FABRICATION AND CONSTRUCTION.
3. THE CONTRACTOR SHALL COORDINATE THE FIELD VERIFICATION OF ALL EXISTING SITE CONDITIONS SUCH AS EXISTING FLOOR ELEVATIONS, EXISTING FOOTING ELEVATIONS, EXISTING UTILITIES, ETC. WHETHER NOTED OR NOT IN THE CONTRACT DOCUMENTS AND SHALL NOTIFY THE ARCHITECT OF ANY CONFLICTS, DISCREPENCIES OR UNKNOWN CONDITIONS PRIOR TO FABRICATION AND CONSTRUCTION.
4. REPRODUCTION OF CONTRACT DRAWINGS, IN ANY FORM, WILL NOT BE ACCEPTED AS SHOP DRAWINGS.
5. REVIEW OF SUBMITTALS AND/OR SHOP DRAWINGS BY THE STRUCTURAL ENGINEER-OF-RECORD DOES NOT RELIEVE THE CONTRACTOR OF THE RESPONSIBILITY TO REVIEW AND CHECK SHOP DRAWINGS BEFORE SUBMITTAL FOR REVIEW. THE CONTRACTOR REMAINS SOLELY RESPONSIBLE FOR ERRORS AND OMISSIONS ASSOCIATED WITH THE PREPARATION OF SHOP DRAWINGS AS THEY PERTAIN TO MEMBER SIZES, DETAILS AND DIMENSIONS SPECIFIED IN THE CONTRACT DOCUMENTS. CONTRACTOR ALSO SHALL BE RESPONSIBLE FOR ALL MEANS, METHODS, TECHNIQUES, AND PROCEDURES OF CONSTRUCTION.
6. CONTRACTOR SHALL PROVIDE TEMPORARY GUYS AND BRACING AS REQUIRED DURING CONSTRUCTION. STRUCTURE IS NOT STABLE UNTIL ALL STRUCTURAL MEMBERS, CONNECTIONS, AND DECKING IS IN PLACE.
7. ACI, AISC, AITC AND AWS SPECIFICATIONS SHALL GOVERN ALL PHASES OF FABRICATION AND CONSTRUCTION.

SITE CONSTRUCTION NOTES

EXCAVATION & FILL

1. ALL UNDERCUTTING, SITE PREPARATION, FILL SELECTION, BACKFILLING AND COMPACTION SHALL BE PERFORMED IN STRICT ACCORDANCE WITH THE SPECIFICATIONS AND SOILS ENGINEER'S RECOMMENDATIONS.
2. SELECT FILL BENEATH THE BUILDING SHALL BE PLACED IN LIFTS NOT EXCEEDING 8" LOOSE THICKNESS AND COMPACTED TO AT LEAST 95% OF MAXIMUM MODIFIED PROCTOR DRY DENSITY (ASTM D1557). THE IN-PLACE DENSITY AND MOISTURE CONTENT SHALL BE ESTABLISHED AND APPROVED FOR EACH LIFT PRIOR TO PLACEMENT OF SUBSEQUENT LIFTS.

SPREAD FOOTINGS

1. BOTTOM OF FOOTING ELEVATIONS (BF) SHOWN ON THE PLANS ARE FOR ESTIMATING PURPOSES ONLY AND ARE NOT NECESSARILY TO BE USED FOR CONSTRUCTION. THE SOILS ENGINEER OR HIS REPRESENTATIVE SHALL BE ENGAGED TO INSPECT ALL FOOTING EXCAVATIONS TO VERIFY THAT THE REQUIRED ALLOWABLE BEARING CAPACITY IS ATTAINABLE. BOTTOM OF FOOTING ELEVATIONS SHALL BE ADJUSTED PER THE ON-SITE RECOMMENDATIONS OF THE SOILS ENGINEER OR HIS REPRESENTATIVE.
2. ALL SPREAD FOOTING EXCAVATIONS SHALL BE FOUNDED IN PROPERLY COMPACTED SELECT FILL OR IN THE NATURAL SOILS WITH AN ALLOWABLE NET BEARING CAPACITY OF AT LEAST 2000 PSF.
3. CONTRACTOR SHALL RETAIN THE SERVICES OF A GEOTECHNICAL ENGINEER REGISTERED IN THE STATE OF ARKANSAS TO PROVIDE GEOTECHNICAL ENGINEERING SERVICES AS REQUIRED.
4. MAINTAIN FINISHED GRADE (AND/OR BOTTOM OF FOOTING ELEVATIONS) TO PROVIDE AT LEAST 2'-0" COVER ABOVE THE BOTTOM OF ALL EXTERIOR FOOTINGS FOR FROST PROTECTION.

CONCRETE NOTES

CONCRETE REINFORCEMENT

1. CONCRETE REINFORCEMENT SUPPLIER SHALL SUBMIT SHOP DRAWINGS TO THE ARCHITECT FOR REVIEW PRIOR TO CONSTRUCTION.
2. ALL REINFORCING STEEL SHALL BE ASTM A615, GRADE 60, UNLESS NOTED OTHERWISE.
3. PROVIDE THE FOLLOWING PROTECTIVE COVERING FOR ALL REINFORCING BARS UNLESS DETAILED OR NOTED OTHERWISE:

SLAB-ON-GRADE BARS (BOTTOM)	3" CLEAR
BELOW GRADE (CAST AGAINST EARTH)	3" CLEAR
BELOW GRADE (FORMED EDGE)	2" CLEAR

4. DO NOT CUT TIES OR CONTINUOUS BARS TO PROVIDE CLEARANCE FOR EMBEDDED ITEMS OR OTHER OBSTRUCTIONS. INDIVIDUAL BARS AND TIES MAY BE MOVED VERTICALLY UP TO 1.5" AS REQUIRED TO PROVIDE CLEARANCE FOR EMBEDS, HOOKS, ETC. DO NOT HEAT REINFORCING TO BEND IT.
5. IF DOWELS OR VERTICAL REINFORCING ARE CUT OR SEVERELY BENT, CONTRACTOR MAY BE REQUIRED TO REMOVE THE CONCRETE BACK TO THE PREVIOUS POUR JOINT AND REPLACE THE DAMAGED BARS AND CONCRETE AT THE CONTRACTOR'S EXPENSE.
6. REINFORCEMENT SHALL BE SPLICED ONLY AS SHOWN OR NOTED IN THE STRUCTURAL CONTRACT DOCUMENTS. SPLICES AT OTHER LOCATIONS SHALL BE APPROVED IN WRITING BY THE STRUCTURAL ENGINEER-OF-RECORD PRIOR TO FABRICATION.
7. REINFORCING BARS MARKED AS CONTINUOUS SHALL BE SPLICED WITH CLASS "B" TENSION LAP SPLICES ONLY.
8. ALL TENSION LAP SPLICES SHALL BE CLASS "B" UNLESS NOTED OTHERWISE.
9. WELDED WIRE REINFORCEMENT SHALL CONFORM TO ASTM A185. LAP REINFORCEMENT 8 INCHES ON SIDES AND ENDS. MAINTAIN WIRE 1 TO 2 INCHES BELOW TOP SURFACE OF SLAB-ON-GRADE, UNLESS NOTED OTHERWISE. WELDED WIRE REINFORCEMENT MUST BE PLACED ON CHAIRS OR BOLSTERS AS REQUIRED TO MAINTAIN POSITION IN THE SLAB.
10. ONCE SHOP DRAWINGS HAVE BEEN REVIEWED, DO NOT ADD REINFORCING OR INFORMATION TO PREVIOUSLY SUBMITTED SHEETS FOR SUBSEQUENT SUBMITTALS UNLESS SHOP DRAWINGS ARE BEING RESUBMITTED AFTER BEING RETURNED "NOT REVIEWED".
11. WHERE ANCHOR RODS ARE CAST INTO CONCRETE, PROVIDE SUPPLEMENTAL REINFORCING EACH WAY, TIED NEAR THE TOP AND BOTTOM OF ALL ANCHOR RODS TO THE ADJACENT REBAR TO SECURE RODS DURING CONCRETE PLACEMENT. (MINIMUM SIZE #4)

CAST-IN-PLACE CONCRETE

1. CONCRETE SUPPLIER SHALL SUBMIT CONCRETE MIX DESIGN DATA TO THE ARCHITECT FOR REVIEW PRIOR TO CONSTRUCTION.
2. CONCRETE SHALL HAVE AT LEAST THE FOLLOWING MINIMUM COMPRESSIVE STRENGTHS AT 28 DAYS:

A. FOOTINGS AND GRADE BEAMS	3000 PSI
B. SLABS-ON-GRADE	4000 PSI

3. MIX DESIGN SHALL INCLUDE AT LEAST THE FOLLOWING AMOUNTS OF PORTLAND CEMENT MEETING ASTM C150 OR D595 PER CUBIC YARD OF CONCRETE:

	NON-AIR ENTRAINED		AIR ENTRAINED		
28 DAY COMPRESSIVE STRENGTH	MIN. CEMENT CONTENT (LBS/YD^3)	MAXIMUM PERMISSIBLE W/C RATIO	MIN. CEMENT CONTENT (LBS/YD^3)	MAXIMUM PERMISSIBLE W/C RATIO	MAX. SLUMP w/ WRA
3000	470	0.53	517	0.46	6"
4000	564	0.44	611	0.40	6"

4. PROPORTIONS OF CONCRETE MIX DESIGNS SHALL BE DETERMINED BY THE PROCEDURES ESTABLISHED IN SECTION 5.3 OF ACI 318-99.
5. MIX DESIGN MAY INCLUDE (TYPE C) FLYASH AS A REPLACEMENT FOR PORTLAND CEMENT UP TO A MAXIMUM OF 20% OF THE TOTAL CEMENTIOUS MATERIAL. DO NOT USE A FLYASH CONTAINING CONCRETE MIX WHEN THE TEMPERATURE DURING PLACEMENT OR CURING IS PROJECTED TO FALL BELOW 60 DEGREES FAHRENHEIT.
6. MIX DESIGN MAY INCLUDE WATER REDUCING ADMIXTURES CONFORMING TO ASTM C494, TYPE A, TO PROVIDE WORKABILITY AND SPECIFIED SLUMP WITHOUT EXCEEDING SPECIFIED WATER/CEMENT RATIOS.
7. ALL CONCRETE EXPOSED TO WEATHER SHALL CONTAIN 5.5% AIR ENTRAINMENT (±1.5%). DO NOT EXCEED 3% AIR CONTENT IN CONCRETE RECEIVING A STEEL TROWEL FINISH.

METALS NOTES

STRUCTURAL STEEL FRAMING

1. STRUCTURAL STEEL SUPPLIER SHALL SUBMIT SHOP DRAWINGS TO THE ARCHITECT FOR REVIEW PRIOR TO FABRICATION.
2. ALL STRUCTURAL STEEL SHAPES SHALL BE AS FOLLOWS:

A. ALL WIDE FLANGE STRUCTURAL STEEL SHAPES SHALL BE ASTM A992.
B. SQUARE OR RECTANGULAR HOLLOW STRUCTURAL SECTIONS SHALL BE ASTM A500, GRADE B, Fy = 46 KSI
C. ROUND HOLLOW STRUCTURAL SECTIONS SHALL BE ASTM A500, GRADE B, Fy = 42 KSI
D. ROUND STEEL PIPES SHALL BE ASTM A53, GRADE B, FY = 35 KSI.
E. ALL OTHER STRUCTURAL STEEL (CHANNELS, ANGLES, PLATES, ETC.) SHALL BE ASTM A36.

4. ALL ANCHOR RODS SHALL BE ASTM F1554 GRADE 36 UNLESS NOTED OTHERWISE.
5. STRUCTURAL BOLTS SHALL BE ASTM A325-N, UNLESS OTHERWISE NOTED.
6. BOLTS THRU WOOD BLOCKING SHALL BE ASTM A307. ALL BOLTS IN CONTACT WITH TREATED WOOD SHALL BE STAINLESS STEEL (TYPE 316L), OR HOT DIPPED GALVANIZED WITH A MINIMUM COATING THICKNESS OF 0.2 OUNCES PER SQUARE FOOT (ASTM A153). USE STAINLESS BOLTS WITH STAINLESS STEEL CONNECTORS AND GALVANIZED BOLTS WITH GALVANIZED CONNECTORS IF ONLY ONE IS SPECIFIED.
7. POST-INSTALLED ADHESIVE ANCHORS SHALL BE STANDARD HAS-E CARBON STEEL ANCHORS (OR APPROVED EQUAL) WITH A MINIMUM STEEL YIELD STRENGTH OF fy=58 ksi OR ASTM F593 STAINLESS STEEL ANCHORS WITH A MINIMUM STEEL YIELD STRENGTH OF fy=45ksi, UNLESS SHOWN OTHERWISE ON THE DRAWINGS. ADHESIVE SHALL BE HILTI HIT HY150 EPOXY MAX SYSTEM (OR APPROVED EQUAL) IN CONCRETE OR FILLED CMU CELLS AND HILTI HIT HY20 EPOXY SYSTEM (OR APPROVED EQUAL) IN HOLLOW CMU OR CLAY MASONRY.
8. POST-INSTALLED EXPANSION ANCHORS SHALL BE HILTI KWIK BOLT II (OR APPROVED EQUAL) ASTM A510 CARBON STEEL ANCHORS WITH A MINIMUM STEEL YIELD STRENGTH OF fy=41 ksi, OR ASTM A276 (OR ASTM A493) STAINLESS STEEL ANCHORS WITH A MINIMUM YIELD STRENGTH fy=64 ksi. UNLESS SHOWN OTHERWISE ON THE DRAWINGS.
9. CONNECTIONS SHALL BE DESIGNED CONSIDERING BOLT THREADS INCLUDED IN THE SHEAR PLANE (A325-N). ALL BOLTING SHALL BE INSTALLED BY THE TURN-OF-THE-NUT METHOD, REMOVABLE LOAD INDICATOR BOLTS, OR CALIBRATED WRENCH. SNUG TIGHT BOLTING WILL NOT BE PERMITTED UNLESS SPECIFICALLY DETAILED ON CONTRACT DRAWINGS.
10. ALL BOLTED CONNECTIONS (EXCEPT COMPOSITE FLOOR BEAM CONNECTIONS) SHALL BE BEARING TYPE SELECTED TO SUPPORT ONE-HALF (1/2) OF THE TOTAL UNIFORM LOAD CAPACITY OF THE BEAMS AS SHOWN IN THE TABLES OF UNIFORM LOAD CONSTANTS, PART 2 OF THE AISC MANUAL, 9TH EDITION, FOR THE GIVEN BEAM SIZE, SPAN AND GRADE OF STEEL SPECIFIED. THE EFFECTS OF ANY CONCENTRATED LOADS MUST BE TAKEN INTO ACCOUNT. CONNECTIONS SHALL BE DESIGNED CONSIDERING THREADS INCLUDED IN THE SHEAR PLANE (A325-N).
11. ALL WELDS SHALL BE E70XX, MINIMUM AND SHALL BE PERFORMED BY AWS CERTIFIED WELDERS, CERTIFIED WITHIN THE PREVIOUS TWELVE (12) MONTHS.
12. DO NOT PRIME PAINT STEEL THAT RECEIVES SPRAYED FIREPROOFING.
13. ALL STEEL LINTELS AND SHELF ANGLES SHALL BE COATED WITH A ZINC RICH PRIMER.
14. ALL STRUCTURAL STEEL EXPOSED TO WEATHER (SUCH AS MECHANICAL FRAMES) SHALL BE HOT DIPPED GALVANIZED AFTER FABRICATION.

METAL DECKING

1. METAL DECKING SUPPLIER SHALL SUBMIT SHOP DRAWINGS PREPARED UNDER THE DIRECT SUPERVISION OF A PROFESSIONAL ENGINEER REGISTERED IN THE STATE OF ARKANSAS TO THE ARCHITECT FOR REVIEW PRIOR TO FABRICATION.
2. ROOF DECKING SHALL BE 1.5B22 PAINTED ROOF DECK ATTACHED TO THE STRUCTURE WITH 5/8" DIAMETER PUDDLE WELDS IN A 36/4 PATTERN AND (2) #10 TEK SCREW SIDELAP FASTENERS BETWEEN SUPPORTS.

COLD-FORMED METAL FRAMING

1. COLD-FORMED METAL FRAMING SUPPLIER SHALL SUBMIT SHOP DRAWINGS TO THE ARCHITECT FOR REVIEW PRIOR TO FABRICATION.
2. SHOP DRAWINGS SHALL DETAIL A COMPLETE SYSTEM SHOWING MEMBER SIZES, SPACING AND CONNECTIONS TO THE STRUCTURE.
3. ALL STRUCTURAL STUDS, TRACK, BRIDGING, END CLOSURES AND ACCESSORIES SHALL BE FORMED FROM STEEL CONFORMING TO THE REQUIREMENTS OF ASTM A653/A653M.
4. ALL COLD-FORMED STEEL STUD SECTIONS ARE IDENTIFIED ACCORDING TO THE DESIGNATIONS GIVEN IN THE "STEEL STUD MANUFACTURERS ASSOCIATION" (SSMA) PRODUCT TECHNICAL INFORMATION MANUAL. SEE SSMA FOR MINIMUM SECTION PROPERTIES.

EXAMPLE:	600S162-43	
600	=	MEMBER DEPTH (600 x 1/100 INCHES = 6")
S	=	STYLE (S = STUD, T = TRACK, U = CHANNEL)
162	=	FLANGE WIDTH (162 x 1/100 INCHES = 1.625" = 1-5/8")
43	=	MATERIAL THICKNESS (43 = 43 MILS x1/1000 INCHES = 0.043")

YIELD STRENGTH SHALL BE 33 KSI UNLESS NOTED ON PLANS AS FOLLOWS:

600S162-43 (50 KSI) - FOR 50 KSI YIELD STRENGTH

5. SEE SPECIFICATIONS FOR ADDITIONAL INFORMATION.
6. PROVIDE COLUMNS BUILT-UP OF MULTIPLE STUDS (2 STUDS MIN.) FOR HEADER AND BEAM BEARING.
7. ALL STUDS AT LOADBEARING WALLS SHALL BE CUT FULL LENGTH WITH TRACKS (TOP & BOTTOM) INSTALLED TIGHT AGAINST ENDS OF STUD. NO GAPS BETWEEN END OF STUDS AND TRACK WILL BE ALLOWED IN LOAD BEARING STUDS.
8. ALL COLD-FORMED STEEL FRAMING SHAPES (SUCH AS Z-PURLINS, C-PURLINS, HAT CHANNELS AND EAVE STRUTS) ARE IDENTIFIED ACCORDING TO THE DESIGNATIONS GIVEN IN THE LIGHT GAGE STEEL INSTITUTE (LGSI) "LIGHT GAGE STRUCTURAL STEEL FRAMING SYSTEM DESIGN HANDBOOK". SEE LGSI FOR MINIMUM SECTION PROPERTIES.

DESIGN LOADS:

DEAD LOADS:		WEIGHT OF THE STRUCTURE
ROOF LIVE LOAD:		20 PSF
GROUND SNOW LOAD	P_g:	10 PSF
BASIC WIND SPEED	V_{ASD}:	90 MPH
WIND IMPORTANCE FACTOR	I_w:	1.0
WIND EXPOSURE CATEGORY		C
INTERNAL PRESSURE COEFFICIENT	GC_{pi}:	0.18
COMP. & CLADDING WIND PRESSURE	P_{WASD}:	SEE ASCE 7-05, FIGURE 6-3
OCCUPANCY CATEGORY		II
SEISMIC IMPORTANCE FACTOR	I_E:	1.0
MAPPED SPECTRAL RESPONSE ACCELERATIONS	S_S:	1.59
	S_1:	0.6
SPECTRAL RESPONSE COEFFICIENTS	S_{ds}:	1.06
	S_{d1}:	0.6
SITE CLASS		D
SEISMIC DESIGN CATEGORY		D
BASIC SEISMIC-FORCE-RESISTING SYSTEM (PER ASCE 7-05, TABLE 12.2-1)		MOMENT RESISTING FRAME SYSTEM ORDINARY STEEL MOMENT FRAMES
DESIGN BASE SHEAR	V_t:	0.30W
SEISMIC RESPONSE COEFFICIENT	C_s:	0.30
RESPONSE MODIFICATION FACTOR	R:	3.5
ANALYSIS PROCEDURE		EQUIVALENT LATERAL FORCE METHOD (PER ASCE 7-05, TABLE 12.6-1 & SECT. 12.8)

SEISMIC ZONE PER A.C.A. 12-80-101 ET. SEQ.ZONE: 3

CODES: 2007 ARKANSAS FIRE PREVENTION CODE
A.C.A. 12-80-101 ET. SEQ. (ARKANSAS STATE LAW)

THE FOUNDATIONS AND STRUCTURAL FRAMING HAVE BEEN DESIGNED TO RESIST THE LOADS AND FORCES STATED ABOVE IN ACCORDANCE WITH THE REQUIREMENTS OF THE 2007 ARKANSAS FIRE PREVENTION CODE AND A.C.A. 12-80-101 ET. SEQ.

SPECIAL INSPECTION NOTES

1. SPECIAL INSPECTIONS SHALL BE REQUIRED IN ACCORDANCE WITH CHAPTER 17 OF THE 2007 ARKANSAS FIRE PREVENTION CODE. CONTRACTOR SHALL BE RESPONSIBLE FOR COORDINATING ALL INSPECTIONS WITH THE INSPECTION AGENCY.
2. THE SPECIAL INSPECTOR SHALL BE A QUALIFIED PERSON WHO SHALL DEMONSTRATE COMPETENCE TO PERFORM THE REQUIRED INSPECTION TO THE SATISFACTION OF THE BUILDING OFFICIAL.
3. THE SPECIAL INSPECTOR SHALL KEEP RECORDS OF INSPECTIONS. INSPECTION REPORTS SHALL BE SUBMITTED TO THE BUILDING OFFICIAL AND TO THE REGISTERED DESIGN PROFESSIONAL IN RESPONSIBLE CHARGE.
4. REPORTS SHALL INDICATE THAT WORK INSPECTED WAS DONE IN CONFORMANCE TO APPROVED CONSTRUCTION DOCUMENTS. DISCREPANCIES SHALL BE BROUGHT TO THE IMMEDIATE ATTENTION OF THE CONTRACTOR FOR CORRECTION. IF THE DISCREPANCIES ARE NOT CORRECTED, THE DISCREPANCIES SHALL BE BROUGHT TO THE ATTENTION OF BUILDING OFFICIAL AND THE REGISTERED DESIGN PROFESSIONAL IN RESPONSIBLE CHARGE PRIOR TO THE COMPLETION OF THAT PHASE OF THE WORK.
5. A FINAL REPORT OF INSPECTIONS DOCUMENTING REQUIRED SPECIAL INSPECTIONS AND CORRECTION OF ANY DISCREPANCIES SHALL BE SUBMITTED TO THE OWNER, BUILDING OFFICIAL AND THE REGISTERED DESIGN PROFESSIONAL IN RESPONSIBLE CHARGE AT THE COMPLETION OF THE STRUCTURAL PORTION OF THE WORK.

CHARLES F. LUTER FAMILY ACADEMIC SUCCESS CENTER

ADDITIONS TO ATHLETIC COMPLEX SOUTH ENTRY

ARKANSAS STATE UNIVERSITY JONESBORO, ARKANSAS

BRACKETT KRENNERICH architects

CERTIFICATE OF AUTHORIZATION ENGINEERING CONSULTANTS, INC. No. 26 ARKANSAS-ENGINEER

Engineering Consultants, Inc.
Structural Engineers
401 West Capitol Avenue, Suite 305
Little Rock, Arkansas 72201-3401
Phone No: (501) 376-3752
Fax No: (501) 376-7314

STATE OF ARKANSAS REGISTERED PROFESSIONAL ENGINEER No. 11256 BRIAN D. MILLER 2-13-09

Commission Number 15708

S100

Date: February 13, 2009

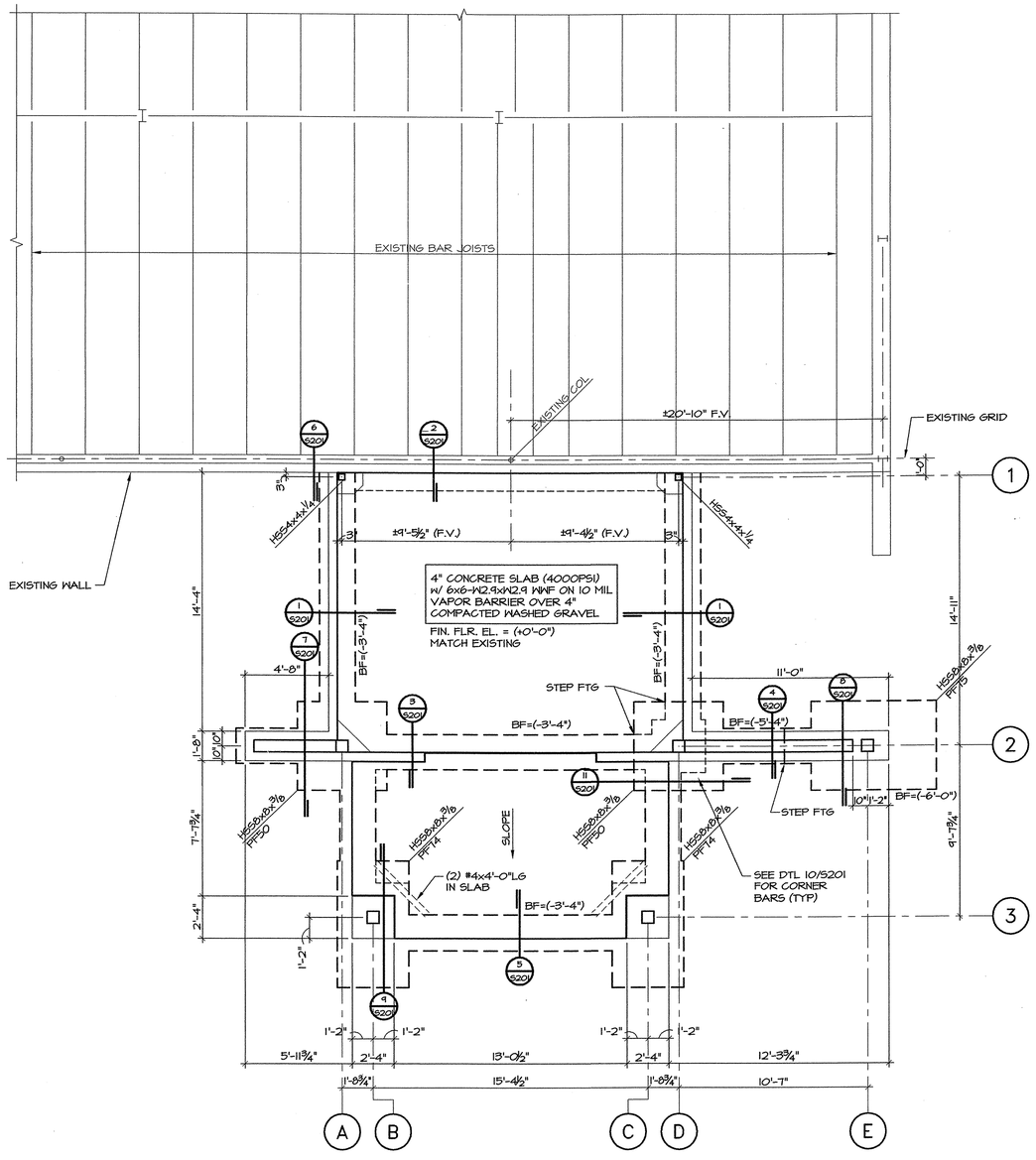

FOUNDATION PLAN
1/4"=1'-0"

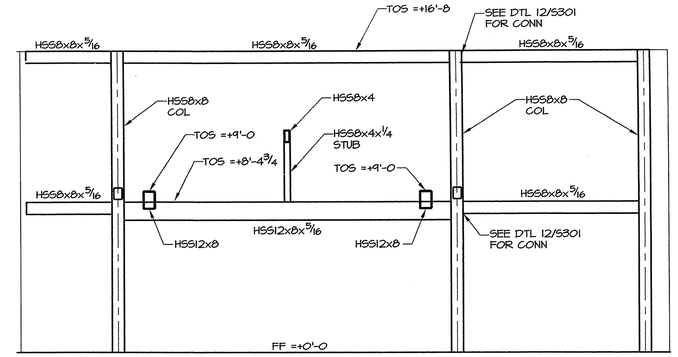

A ELEVATION
1/4"=1'-0"

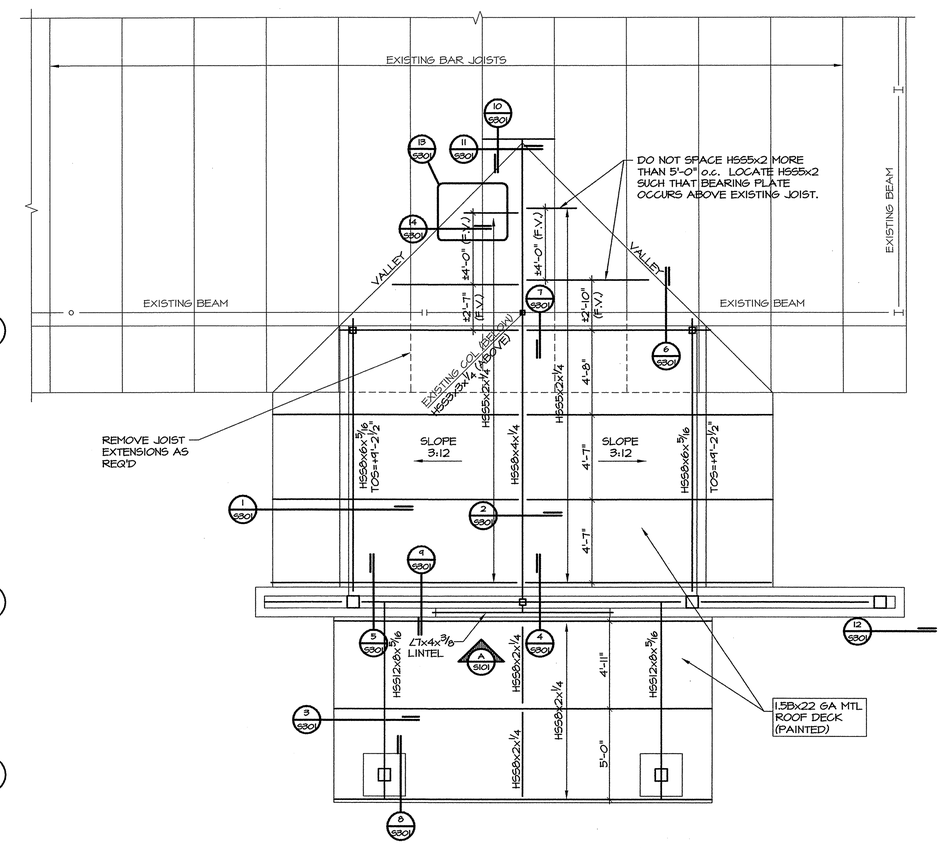

ROOF FRAMING PLAN
1/4"=1'-0"

CHARLES F. LUTER FAMILY ACADEMIC SUCCESS CENTER

ADDITIONS TO ATHLETIC COMPLEX SOUTH ENTRY

ARKANSAS STATE UNIVERSITY JONESBORO, ARKANSAS

BRACKETT KRENNERICH architects

CERTIFICATE OF AUTHORIZATION ENGINEERING CONSULTANTS, INC. No. 26 ARKANSAS-ENGINEER

Engineering Consultants, Inc.
Structural Engineers
401 West Capitol Avenue, Suite 305
Little Rock, Arkansas 72201-3401
Phone No: (501) 376-3752
Fax No: (501) 376-7314

STATE OF ARKANSAS BRIAN D. MILLER No. 11256 REGISTERED PROFESSIONAL ENGINEER 2-12-09

Commission Number 15708

S101

Date: February 13, 2009

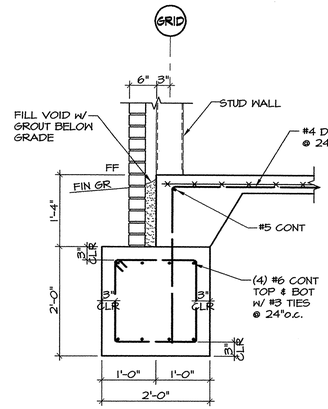

1 SECTION
3/4"=1'-0"

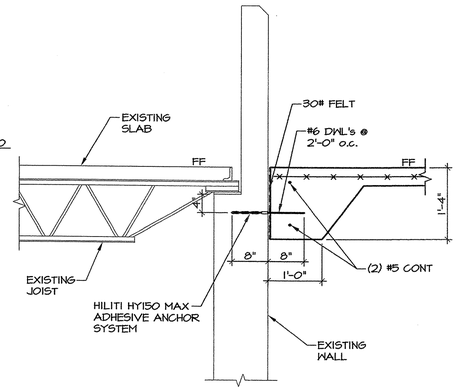

2 SECTION
3/4"=1'-0"

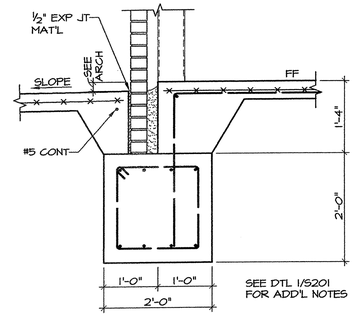

3 SECTION
3/4"=1'-0"

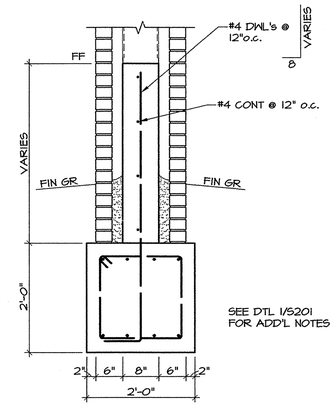

4 SECTION
3/4"=1'-0"

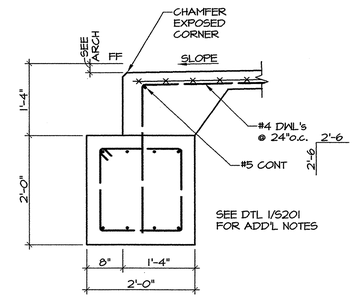

5 SECTION
3/4"=1'-0"

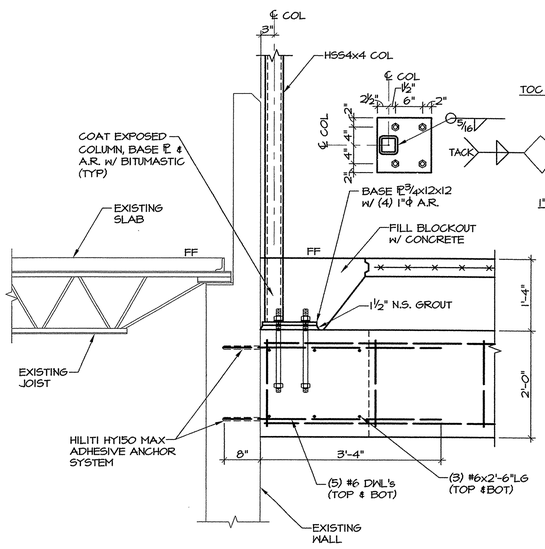

6 SECTION
3/4"=1'-0"

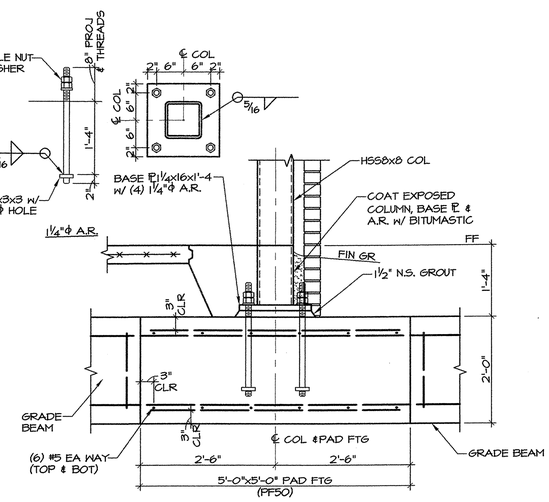

7 SECTION
3/4"=1'-0"

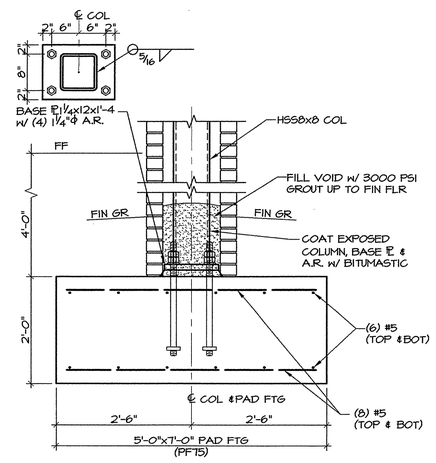

8 SECTION
3/4"=1'-0"

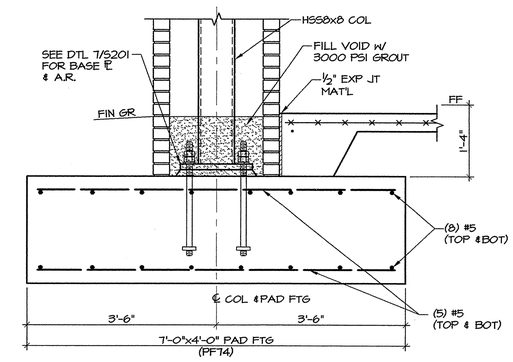

9 SECTION
3/4"=1'-0"

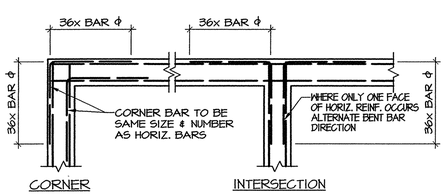

TYPICAL FOR: CONC. WALLS
CONC. BEAMS
CONC. FOOTINGS
CONC. FILLED BONDBEAMS
THICKENED SLABS

10 TYPICAL CORNER BAR DETAIL
N. T. S.

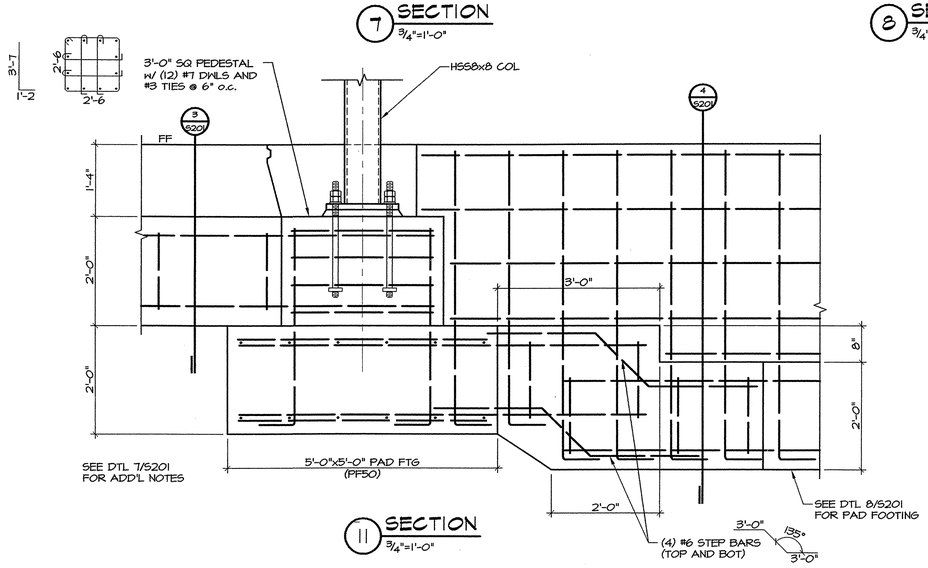

11 SECTION
3/4"=1'-0"

CHARLES F. LUTER FAMILY ACADEMIC SUCCESS CENTER

ADDITIONS TO ATHLETIC COMPLEX SOUTH ENTRY

ARKANSAS STATE UNIVERSITY JONESBORO, ARKANSAS

BRACKETT KRENNERICH architects

CERTIFICATE OF AUTHORIZATION ENGINEERING CONSULTANTS, INC. No. 26 ARKANSAS ENGINEER NO 1201

Engineering Consultants, Inc.
Structural Engineers
401 West Capitol Avenue, Suite 305
Little Rock, Arkansas 72201-3401
Phone No: (501) 376-3752
Fax No: (501) 376-7314

STATE OF ARKANSAS REGISTERED PROFESSIONAL ENGINEER No. 12256 BRIAN D. MILLER 2-13-09

Commission Number 15708

S201

Date: February 13, 2009

1 SECTION
3/4"=1'-0"

2 SECTION
3/4"=1'-0"

3 SECTION
3/4"=1'-0"

4 SECTION
3/4"=1'-0"

5A SECTION
3/4"=1'-0"

5 SECTION
3/4"=1'-0"

8A SECTION
3/4"=1'-0"

6 SECTION
3/4"=1'-0"

7 SECTION
3/4"=1'-0"

8 SECTION
3/4"=1'-0"

9 SECTION
3/4"=1'-0"

10 SECTION
3/4"=1'-0"

11 SECTION
3/4"=1'-0"

12 SECTION
3/4"=1'-0"

13 SECTION
1½"=1'-0"

14 SECTION
3/4"=1'-0"

CHARLES F. LUTER FAMILY ACADEMIC SUCCESS CENTER

ADDITIONS TO ATHLETIC COMPLEX SOUTH ENTRY

ARKANSAS STATE UNIVERSITY JONESBORO, ARKANSAS

BRACKETT KRENNERICH architects

CERTIFICATE OF AUTHORIZATION ENGINEERING CONSULTANTS, INC. No. 26 ARKANSAS ENGINEER

Engineering Consultants, Inc.
Structural Engineers
401 West Capitol Avenue, Suite 305
Little Rock, Arkansas 72201-3401
Phone No: (501) 376-3752
Fax No: (501) 376-7314

STATE OF ARKANSAS REGISTERED PROFESSIONAL ENGINEER No. 11256 BRIAN D. MILLER 2-12-09

Commission Number 15708

S301

Date: February 13, 2009

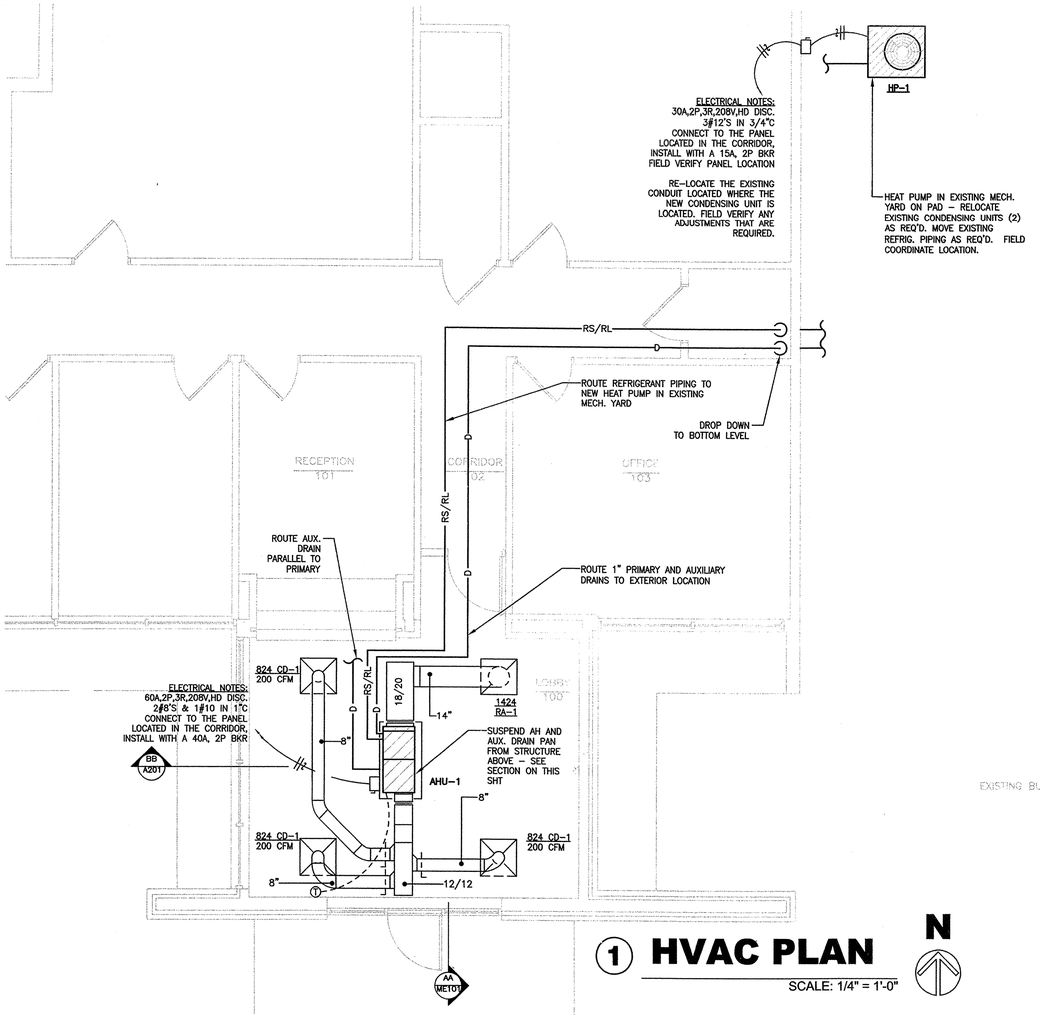

1 HVAC PLAN

SCALE: 1/4" = 1'-0"

N

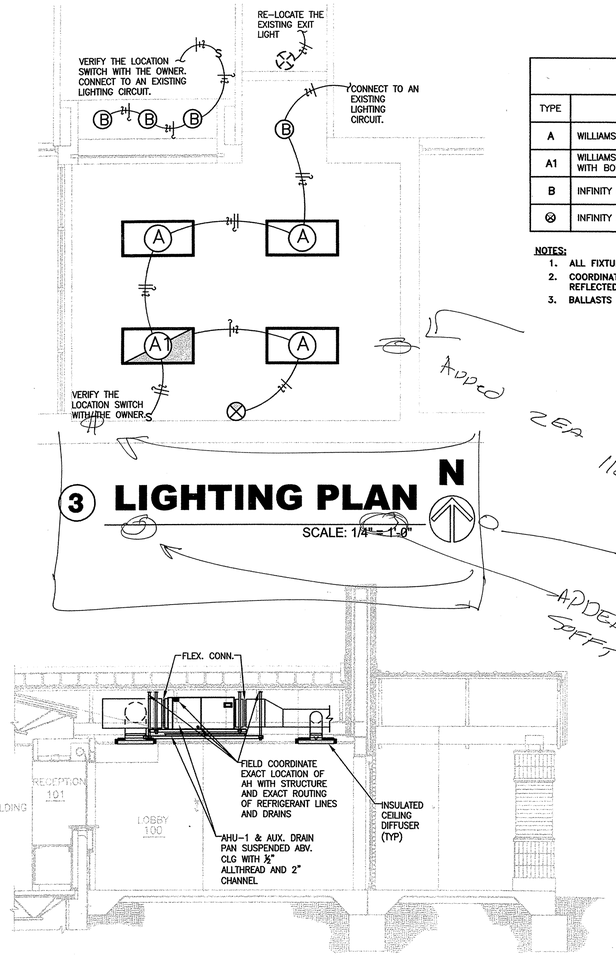

2 HVAC -SECTION AA

SCALE: 1/4" = 1'-0"

LIGHT FIXTURE SCHEDULE

TYPE	MANUFACTURER OR EQUAL	LAMPS	REMARKS
A	WILLIAMS 50-G-S24-332-SA12125-EBLH-UNV	T8 32W	2x4 LAY IN FIXTURE
A1	WILLIAMS 50-G-S24-332-SA12125-EBLH-UNV WITH BODINE B-50	T8 32W	2x4 LAY IN FIXTURE WITH EM BALLAST
B	INFINITY PV60-132T-STR-UNV	32W CFL	6IN CAN
⊗	INFINITY EXIT-R-EM-WHT	LED	EXIT SIGN

NOTES:

1. ALL FIXTURES SHALL BE PAINTED AFTER FABRICATION.
2. COORDINATE ALL FIXTURES MOUNTING TYPE AND HEIGHT WITH ARCHITECTURAL REFLECTED CEILING PLAN.
3. BALLASTS MUST BE 10%THD AND PROGRAM START.

Added 2 EA 110v outlets

Added one flood light

Added 2 EA shift lights

3 LIGHTING PLAN

SCALE: 1/4" = 1'-0"

N

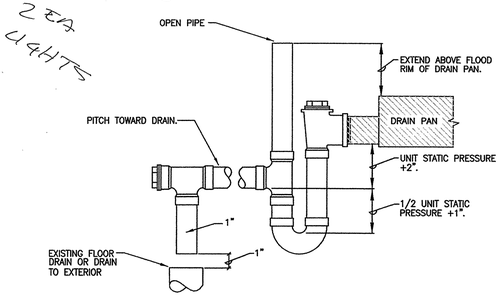

4 A.H.U. DRAIN PIPING DETAIL

N.T.S.

AIR HANDLING UNIT SCHEDULE

DESIG.	MFR/MDL.	AREA SERVED	LOCAT.	TYPE	OSA		FAN DATA				COOLING COIL				HEATING COIL			AUX. HEAT		ELECTRICAL			REMARKS
					MIN	MAX	CFM	ESP/TSP	TYPE	DIA.	EAT	LAT	MBH TOTAL	MBH SENS.	ODB	EAT/LAT	MBH	EAT/LAT	MBH	MCA	MOCP	VOLTS/PH	
AHU-1	TRANE/ 4TEC3F18B100A	LOBBY	ABOVE LAY-IN CLG.	AIR HANDLER	---	---	600	.5"	CENTR.	9.00"	80.0° DB 67.0° WB	62.0° DB 58.0° WB	18.6	13.2	17°	68.0°/94.1°	10.1	94.1/145°	19.7	36	40	208/1ø	PROVIDE PROGRAMMABLE THERMOSTAT. PROVIDE CONDENSATE OVERFLOW SWITCHES FOR PRIMARY & AUX. DRAINS

HEAT PUMP CONDENSING UNIT SCHEDULE (14 SEER)

DESIG.	MFR/MDL.	TYPE	OSA AMBIENT (CLG/HTG DB)	SERVES	COOLING					HEATING					ELECTRICAL			REMARKS
					T(MBH)	S(MBH)	EAT	LAT	CFM	T(MBH)	S(MBH)	EAT	LAT	CFM	VOLTS/PHASE	MCA	MOCP	
HP-1	TRANE/ 4TWB3018A1	AIR COOLED	95°/17°	LOBBY	18.6	13.2	80°F DB/ 67°F WB	62.0°F DB/ 58.0°F WB	600	10.1	---	68.0°	94.1°	360	208/1	10	15	INSTALL UNIT ON CONCRETE PAD

AIR DEVICE SCHEDULE

DESIG.	MFR./MDL.	TYPE	FACE SIZE	FINISH	FREE AREA	ACCESS.	REMARKS
CD-1	TUTTLE & BAILEY / 1300	LOUVER FACE CEILING SUPPLY	AS NOTED	WHITE	---	VOLUME CONTROL	2'x2' GRILLE WITH ROUND NECK FIXED HORIZONTAL AIR DEFLECTION
RA-1	TUTTLE & BAILEY / CRE500FB	GRID CORE CEILING RETURN	AS NOTED	WHITE	---	----	PROVIDE WITH 1" CORE AND 1" FRAME.

LEGEND

- CEILING DIFFUSER
- RETURN AIR GRILLE (RA)
- EXHAUST REGISTER (ER)
- 624 CD-1 / 100 CFM — SIZE – DESIGNATION / CUBIC FEET PER MINUTE
- FLEXIBLE DUCT CONNECTOR
- TURNING VANES
- CONNECT TO EXISTING
- RS/RL — REFRIGERANT PIPING
- M.D. — MANUAL DAMPER
- ∅ — DIAMETER OR OVAL DUCT
- T — THERMOSTAT
- D — CONDENSATE DRAIN PIPING

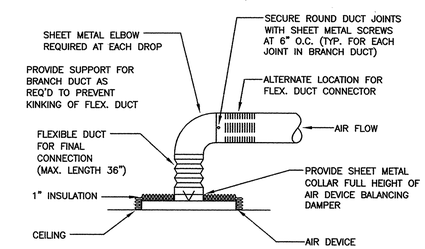

5 CEILING DIFFUSER DETAIL

N.T.S.

STATE OF ARKANSAS REGISTERED PROFESSIONAL ENGINEER No. 12363 ANTHONY DAVID AYCOCK 2/13/09
PETTIT & PETTIT CONSULTING ENGINEERS, INC. LITTLE ROCK, ARKANSAS

CORPORATE REGISTRATION PETTIT & PETTIT CONSULTING ENGINEERS, INC. No. 78 ARKANSAS ENGINEER
© 2009 PETTIT & PETTIT CONSULTING ENGINEERS, INC.

STATE OF ARKANSAS REGISTERED PROFESSIONAL ENGINEER No. 5359 DONALD R. HUGGINS 2/13/09
PETTIT & PETTIT CONSULTING ENGINEERS, INC. LITTLE ROCK, ARKANSAS

Commission Number 15708

ME101

Date: February 13, 2009

BRACKETT KRENNERICH architects

CHARLES F. LUTER FAMILY ACADEMIC SUCCESS CENTER

ADDITIONS TO ATHLETIC COMPLEX SOUTH ENTRY

ARKANSAS STATE UNIVERSITY JONESBORO, ARKANSAS

400 East Huntington, Suite D P.O. Box 1655 Jonesboro, Arkansas 72401-1655 870 932 0551 www.bkarchitects.com